SIEMENS

SIPROTEC

Distance Protection 7SA522

V4.70

Manual

Preface

Contents

Introduction 1

Functions 2

Mounting and Commissioning 3

Technical Data 4

Appendix A

Literature

Glossary

Index

C53000-G1176-C155-7

Note

For safety purposes, please note instructions and warnings in the Preface.

Disclaimer of liability

We have checked the text of this manual against the hardware and software described. However, deviations from the description cannot be completely ruled out, so that no liability can be accepted for any errors or omissions contained in the information given.

The information given in this document is reviewed regularly and any necessary corrections will be included in subsequent editions. We appreciate any suggestions for improvement.

We reserve the right to make technical improvements without notice.

Document Version V04.70.01

Release date 02.2011

Copyright

Copyright © Siemens AG 2011. All rights reserved.

Dissemination or reproduction of this document, or evaluation and communication of its contents, is not authorized except where expressly permitted. Violations are liable for damages. All rights reserved, particularly for the purposes of patent application or trademark registration.

Registered Trademarks

SIPROTEC, SINAUT, SICAM and DIGSI are registered trademarks of Siemens AG. Other designations in this manual might be trademarks whose use by third parties for their own purposes would infringe the rights of the owner.

Siemens Aktiengesellschaft

Order no.: C53000-G1176-C155-7

Preface

Purpose of this Manual

This manual describes the functions, operation, installation, and commissioning of devices 7SA522. In particular, one will find:

- Information regarding the configuration of the scope of the device and a description of the device functions and settings → Chapter 2;
- Instructions for Installation and Commissioning → Chapter 3;
- Compilation of the Technical Data → Chapter 4;
- As well as a compilation of the most significant data for advanced users → Appendix A.

General information with regard to design, configuration, and operation of SIPROTEC 4 devices are set out in the SIPROTEC 4 System Description /1/.

Target Audience

Protection engineers, commissioning engineers, personnel concerned with adjustment, checking, and service of selective protection equipment, automatic and control facilities, and personnel of electrical facilities and power plants.

Applicability of this Manual

This manual applies to: SIPROTEC 4 Distance Protection 7SA522; firmware version V4.70.

Indication of Conformity

CE	This product complies with the directive of the Council of the European Communities on the approximation of the laws of the Member States relating to electromagnetic compatibility (EMC Council Directive 2004/108/EC) and concerning electrical equipment for use within specified voltage limits (Low-voltage directive 2006/95 EC). This conformity is proved by tests conducted by Siemens AG in accordance with the Council Directives in agreement with the generic standards EN61000-6-2 and EN 61000-6-4 for the EMC directive, and with the standard EN 60255-27 for the low-voltage directive. The device has been designed and produced for industrial use. The product conforms with the international standard of the series IEC 60255 and the German standard VDE 0435.

Additional Standards IEEE Std C37.90 (see Chapter 4, Technical Data")

IND. CONT. EQ.
69CA

IND. CONT. EQ.

Additional Support

Should further information on the System SIPROTEC 4 be desired or should particular problems arise which are not covered sufficiently for the purchaser's purpose, the matter should be referred to the local Siemens representative.

Our Customer Support Center provides a 24-hour service.

Phone: +49 (180) 524-7000

Fax: +49 (180) 524-2471

E-mail: support.energy@siemens.com

Training Courses

Enquiries regarding individual training courses should be addressed to our Training Center:

Siemens AG

Siemens Power Academy TD

Humboldt Street 59

90459 Nuremberg

Phone: +49 (911) 433-7005

Fax: +49 (911) 433-7929

Internet: www.siemens.com/power-academy-td

Safety Information

This manual does not constitute a complete index of all required safety measures for operation of the equipment (module, device), as special operational conditions may require additional measures. However, it comprises important information that should be noted for purposes of personal safety as well as avoiding material damage. Information that is highlighted by means of a warning triangle and according to the degree of danger, is illustrated as follows.

DANGER!

Danger indicates that death, severe personal injury or substantial material damage will result if proper precautions are not taken.

WARNING!

indicates that death, severe personal injury or substantial property damage may result if proper precautions are not taken.

Caution!

indicates that minor personal injury or property damage may result if proper precautions are not taken. This particularly applies to damage to or within the device itself and consequential damage thereof.

Note

indicates information on the device, handling of the device, or the respective part of the instruction manual which is important to be noted.

WARNING!

Qualified Personnel

Commissioning and operation of the equipment (module, device) as set out in this manual may only be carried out by qualified personnel. Qualified personnel in terms of the technical safety information as set out in this manual are persons who are authorized to commission, activate, to ground and to designate devices, systems and electrical circuits in accordance with the safety standards.

Use as prescribed

The operational equipment (device, module) may only be used for such applications as set out in the catalogue and the technical description, and only in combination with third-party equipment recommended or approved by Siemens.

The successful and safe operation of the device is dependent on proper handling, storage, installation, operation, and maintenance.

When operating an electrical equipment, certain parts of the device are inevitably subject to dangerous voltage. Severe personal injury or property damage may result if the device is not handled properly.

Before any connections are made, the device must be grounded to the ground terminal.

All circuit components connected to the voltage supply may be subject to dangerous voltage.

Dangerous voltage may be present in the device even after the power supply voltage has been removed (capacitors can still be charged).

Operational equipment with open circuited current transformer circuits may not be operated.

The limit values as specified in this manual or in the operating instructions may not be exceeded. This aspect must also be observed during testing and commissioning.

Typographic and Symbol Conventions

The following text formats are used when literal information from the device or to the device appear in the text flow:

Parameter Names

Designators of configuration or function parameters which may appear word-for-word in the display of the device or on the screen of a personal computer (with operation software DIGSI), are marked in bold letters in monospace type style. The same applies to titles of menus.

1,234A

Parameter addresses have the same character style as parameter names. Parameter addresses contain the suffix **A** in the overview tables if the parameter can only be set in DIGSI via the option **Display additional settings**.

Parameter Options

Possible settings of text parameters, which may appear word-for-word in the display of the device or on the screen of a personal computer (with operation software DIGSI), are additionally written in italics. The same applies to the options of the menus.

„Messages“

Designators for information, which may be output by the relay or required from other devices or from the switch gear, are marked in a monospace type style in quotation marks.

Deviations may be permitted in drawings and tables when the type of designator can be obviously derived from the illustration.

The following symbols are used in drawings:

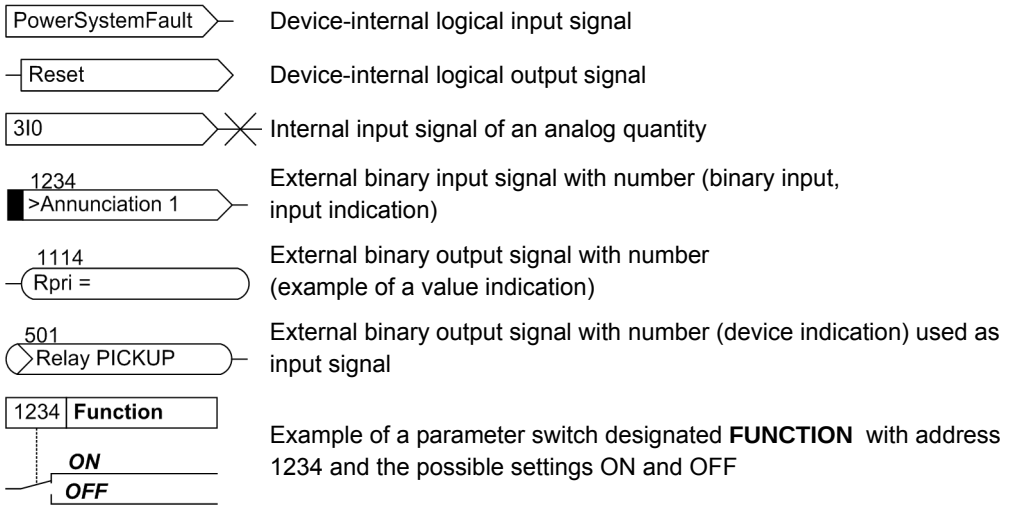

Besides these, graphical symbols are used in accordance with IEC 60617-12 and IEC 60617-13 or similar. Some of the most frequently used are listed below:

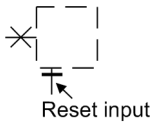

Analog input values

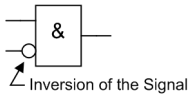

AND-gate operation of input values

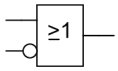

OR-gate operation of input values

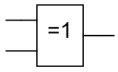

Exclusive OR gate (antivalence): output is active, if only **one** of the inputs is active

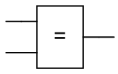

Coincidence gate: output is active, if **both** inputs are active or inactive at the same time

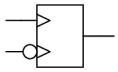

Dynamic inputs (edge-triggered) above with positive, below with negative edge

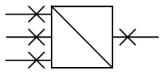

Formation of one analog output signal from a number of analog input signals

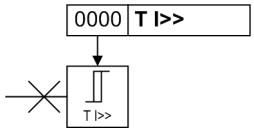

Limit stage with setting address and parameter designator (name)

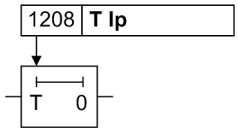

Timer (pickup delay T, example adjustable) with setting address and parameter designator (name)

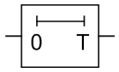

Timer (dropout delay T, example non-adjustable)

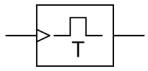

Dynamic triggered pulse timer T (monoflop)

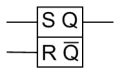

Static memory (RS-flipflop) with setting input (S), resetting input (R), output (Q) and inverted output ($\overline{Q}$)

■

Contents

1 Introduction 19

1.1 Overall Operation 20

1.2 Application Scope 23

1.3 Characteristics 26

2 Functions 33

2.1 General 34

2.1.1 Functional Scope 34
2.1.1.1 Configuration of the Scope of Functions 34
2.1.1.2 Setting Notes 34
2.1.1.3 Settings 37

2.1.2 Power System Data 1 39
2.1.2.1 Setting Notes 39
2.1.2.2 Settings 44

2.1.3 Change Group 45
2.1.3.1 Purpose of the Setting Groups 45
2.1.3.2 Setting Notes 45
2.1.3.3 Settings 45
2.1.3.4 Information List 46

2.1.4 Power System Data 2 46
2.1.4.1 Setting Notes 46
2.1.4.2 Settings 55
2.1.4.3 Information List 57

2.2 Distance Protection 59

2.2.1 Distance protection, general settings 59
2.2.1.1 Earth Fault Detection 59
2.2.1.2 Calculation of the Impedances 63
2.2.1.3 Setting Notes 70
2.2.1.4 Settings 76
2.2.1.5 Information List 77

2.2.2 Distance protection with quadrilateral characteristic (optional) 80
2.2.2.1 Method of Operation 80
2.2.2.2 Setting Notes 85
2.2.2.3 Settings 93

2.2.3 Distance protection with MHO characteristic (optional) 96
2.2.3.1 Functional Description 96
2.2.3.2 Setting Notes 103
2.2.3.3 Settings 107

2.2.4 Tripping Logic of the Distance Protection 108
2.2.4.1 Functional Description 108
2.2.4.2 Setting Notes 113

2.3 Power swing detection (optional) . . . 114
2.3.1 General . . . 114
2.3.2 Method of Operation . . . 115
2.3.3 Setting Notes . . . 118
2.3.4 Settings . . . 119
2.3.5 Information List . . . 119
2.4 Protection data interfaces and communication topology (optional) . . . 120
2.4.1 Function Description . . . 120
2.4.2 Setting Notes . . . 123
2.4.3 Settings . . . 127
2.4.4 Information List . . . 128
2.5 Remote signals via protection data interface (optional) . . . 129
2.5.1 Description . . . 129
2.5.2 Information List . . . 130
2.6 Teleprotection for distance protection . . . 132
2.6.1 General . . . 132
2.6.2 Method of Operation . . . 133
2.6.3 Permissive Underreach Transfer Trip with Zone Acceleration Z1B (PUTT) . . . 134
2.6.4 Direct Underreach Transfer Trip . . . 137
2.6.5 Permissive Overreach Transfer Trip (POTT) . . . 138
2.6.6 Unblocking Scheme . . . 142
2.6.7 Blocking Scheme . . . 146
2.6.8 Transient Blocking . . . 149
2.6.9 Measures for Weak or Zero Infeed . . . 150
2.6.10 Setting Notes . . . 151
2.6.11 Settings . . . 154
2.6.12 Information List . . . 155
2.7 Earth fault overcurrent protection in earthed systems (optional) . . . 156
2.7.1 Functional Description . . . 156
2.7.2 Setting Notes . . . 172
2.7.3 Settings . . . 182
2.7.4 Information List . . . 186
2.8 Teleprotection for earth fault overcurrent protection (optional) . . . 187
2.8.1 General . . . 187
2.8.2 Directional Comparison Pickup . . . 188
2.8.3 Directional Unblocking Scheme . . . 192
2.8.4 Directional Blocking Scheme . . . 196
2.8.5 Transient Blocking . . . 198
2.8.6 Measures for Weak or Zero Infeed . . . 199
2.8.7 Setting Notes . . . 200
2.8.8 Settings . . . 203
2.8.9 Information List . . . 204

2.9 Measures for Weak and Zero Infeed 205
2.9.1 Echo function 205
2.9.1.1 Functional Description 205
2.9.2 Classical Tripping 207
2.9.2.1 Method of Operation 207
2.9.2.2 Setting Notes 209
2.9.3 Tripping According to French Specification 210
2.9.3.1 Method of Operation 210
2.9.3.2 Setting Notes 213
2.9.4 Tables on Classical Tripping and Tripping according to French Specification 215
2.9.4.1 Settings 215
2.9.4.2 Information List 216
2.10 External direct and remote tripping 217
2.10.1 Method of Operation 217
2.10.2 Setting Notes 218
2.10.3 Settings 218
2.10.4 Information List 218
2.11 Overcurrent protection (optional) 219
2.11.1 General 219
2.11.2 Method of Operation 220
2.11.3 Setting Notes 226
2.11.4 Settings 232
2.11.5 Information List 234
2.12 Instantaneous high-current switch-on-to-fault protection (SOTF) 235
2.12.1 Method of Operation 235
2.12.2 Setting Notes 236
2.12.3 Settings 236
2.12.4 Information List 236
2.13 Automatic reclosure function (optional) 237
2.13.1 Function Description 237
2.13.2 Setting Notes 255
2.13.3 Settings 263
2.13.4 Information List 266
2.14 Synchronism and voltage check (optional) 268
2.14.1 Method of Operation 268
2.14.2 Setting Notes 274
2.14.3 Settings 278
2.14.4 Information List 279
2.15 Under and over-voltage protection (optional) 281
2.15.1 Overvoltage Protection 281
2.15.2 Undervoltage Protection 288
2.15.3 Setting Notes 291
2.15.4 Settings 295
2.15.5 Information List 297

2.16 Frequency protection (optional) . . . 300
2.16.1 Method of Operation . . . 300
2.16.2 Setting Notes . . . 303
2.16.3 Settings . . . 304
2.16.4 Information List . . . 305
2.17 Fault locator . . . 306
2.17.1 Functional Description . . . 306
2.17.2 Setting Notes . . . 308
2.17.3 Settings . . . 309
2.17.4 Information List . . . 310
2.18 Circuit breaker failure protection (optional) . . . 311
2.18.1 Method of Operation . . . 311
2.18.2 Setting Notes . . . 323
2.18.3 Settings . . . 326
2.18.4 Information List . . . 327
2.19 Monitoring Function . . . 328
2.19.1 Measurement Supervision . . . 328
2.19.1.1 Hardware Monitoring . . . 328
2.19.1.2 Software Monitoring . . . 330
2.19.1.3 Monitoring External Transformer Circuits . . . 330
2.19.1.4 Monitoring the Phase Angle of the Positive Sequence Power . . . 337
2.19.1.5 Malfunction Reaction . . . 340
2.19.1.6 Setting Notes . . . 343
2.19.1.7 Settings . . . 345
2.19.1.8 Information List . . . 346
2.19.2 Trip circuit supervision . . . 346
2.19.2.1 Method of Operation . . . 346
2.19.2.2 Setting Notes . . . 349
2.19.2.3 Settings . . . 350
2.19.2.4 Information List . . . 350

2.20 Function Control and Circuit Breaker Test 351
2.20.1 Function Control 351
2.20.1.1 Line Energization Recognition 351
2.20.1.2 Detection of the Circuit Breaker Position 355
2.20.1.3 Open Pole Detector 357
2.20.1.4 Pickup Logic for the Entire Device 359
2.20.1.5 Tripping Logic of the Entire Device 360
2.20.2 Circuit breaker trip test 365
2.20.2.1 Functional Description 365
2.20.2.2 Setting Notes 366
2.20.2.3 Information List 366
2.20.3 Device 367
2.20.3.1 Trip-Dependent Indications 367
2.20.3.2 Switching Statistics 368
2.20.3.3 Setting Notes 368
2.20.3.4 Settings 369
2.20.3.5 Information List 369
2.20.4 Ethernet EN100-Module 371
2.20.4.1 Functional Description 371
2.20.4.2 Setting Notes 371
2.20.4.3 Information List 371

2.21 Auxiliary Functions . . . 372
2.21.1 Commissioning Aids . . . 372
2.21.1.1 Functional Description . . . 372
2.21.1.2 Setting Notes . . . 375
2.21.2 Processing of Messages . . . 376
2.21.2.1 Method of Operation . . . 376
2.21.3 Statistics . . . 380
2.21.3.1 Function Description . . . 380
2.21.3.2 Setting Notes . . . 380
2.21.3.3 Information List . . . 381
2.21.4 Measurement . . . 382
2.21.4.1 Method of Operation . . . 382
2.21.4.2 Information List . . . 384
2.21.5 Oscillographic Fault Records . . . 386
2.21.5.1 Description . . . 386
2.21.5.2 Setting Notes . . . 386
2.21.5.3 Settings . . . 387
2.21.5.4 Information List . . . 387
2.21.6 Demand Measurement Setup . . . 388
2.21.6.1 Long-Term Average Values . . . 388
2.21.6.2 Setting Notes . . . 388
2.21.6.3 Settings . . . 388
2.21.6.4 Information List . . . 389
2.21.7 Min/Max Measurement Setup . . . 389
2.21.7.1 Reset . . . 389
2.21.7.2 Setting Notes . . . 389
2.21.7.3 Settings . . . 389
2.21.7.4 Information List . . . 390
2.21.8 Set Points (Measured Values) . . . 391
2.21.8.1 Limit value monitoring . . . 392
2.21.8.2 Setting Notes . . . 392
2.21.8.3 Information List . . . 392
2.21.9 Energy . . . 393
2.21.9.1 Energy Metering . . . 393
2.21.9.2 Setting Notes . . . 393
2.21.9.3 Information List . . . 393
2.22 Command Processing . . . 394
2.22.1 Control Authorization . . . 394
2.22.1.1 Type of Commands . . . 394
2.22.1.2 Sequence in the Command Path . . . 395
2.22.1.3 Interlocking . . . 396
2.22.1.4 Information List . . . 398
2.22.2 Control Device . . . 399
2.22.2.1 Information List . . . 399
2.22.3 Process Data . . . 400
2.22.3.1 Method of Operation . . . 400
2.22.3.2 Information List . . . 401
2.22.4 Protocol . . . 401
2.22.4.1 Information List . . . 401

3 Mounting and Commissioning 403

3.1 Mounting and Connections 404
3.1.1 Configuration Information 404
3.1.2 Hardware Modifications 409
3.1.2.1 General 409
3.1.2.2 Disassembly 411
3.1.2.3 Switching Elements on Printed Circuit Boards 414
3.1.2.4 Interface Modules 427
3.1.2.5 Reassembly 431
3.1.3 Mounting 431
3.1.3.1 Panel Flush Mounting 431
3.1.3.2 Rack and Cubicle Mounting 433
3.1.3.3 Panel Mounting 434
3.2 Checking Connections 435
3.2.1 Checking Data Connections of Serial Interfaces 435
3.2.2 Checking the Protection Data Communication 438
3.2.3 Checking the System Connections 439
3.3 Commissioning 441
3.3.1 Test Mode / Transmission Block 442
3.3.2 Test Time Synchronisation Interface 442
3.3.3 Testing the System Interface 443
3.3.4 Checking the switching states of the binary Inputs/Outputs 445
3.3.5 Checking the Communication Topology 448
3.3.6 Test Mode for Teleprotection Scheme with Protection Data Interface 452
3.3.7 Checking for Breaker Failure Protection 452
3.3.8 Current, Voltage, and Phase Rotation Testing 454
3.3.9 Directional Check with Load Current 455
3.3.10 Polarity Check for the Voltage Input U_4 457
3.3.11 Polarity Check for the Current Input I_4 459
3.3.12 Measuring the Operating Time of the Circuit Breaker 463
3.3.13 Testing of the Teleprotection System with Distance Protection 464
3.3.14 Testing of the Teleprotection System with Earth-fault Protection 466
3.3.15 Check of the Signal Transmission for Breaker Failure Protection and/or End Fault Protection . . . 467
3.3.16 Check of the Signal Transmission for Internal and External Remote Tripping 467
3.3.17 Testing User-defined Functions 468
3.3.18 Trip and Close Test with the Circuit Breaker 468
3.3.19 Switching Test of the Configured Operating Equipment 468
3.3.20 Triggering Oscillographic Recording for Test 469
3.4 Final Preparation of the Device 470

4 Technical Data 471
4.1 General 472
4.1.1 Analogue Inputs and Outputs 472
4.1.2 Auxiliary voltage 473
4.1.3 Binary Inputs and Outputs 474
4.1.4 Communication Interfaces 476
4.1.5 Electrical Tests 480
4.1.6 Mechanical Tests 481
4.1.7 Climatic Stress Tests 482
4.1.8 Deployment Conditions 483
4.1.9 Certifications 483
4.1.10 Construction 483
4.2 Distance Protection 484
4.3 Power Swing Detection (optional) 487
4.4 Distance Protection Teleprotection Schemes 488
4.5 Earth Fault Protection (optional) 489
4.6 Earth Fault Protection Teleprotection Schemes (optional) 499
4.7 Weak-infeed Tripping (classical) 500
4.8 Weak-infeed Tripping (French Specification) 501
4.9 Protection Data Interface and Communication Topology (optional) 502
4.10 External Direct and Remote Tripping 505
4.11 Time Overcurrent Protection 506
4.12 Instantaneous High-current Switch-onto-fault Protection 509
4.13 Automatic Reclosure (optional) 510
4.14 Synchronism and Voltage Check (optional) 511
4.15 Voltage Protection (optional) 513
4.16 Frequency Protection (optional) 516
4.17 Fault Locator 517
4.18 Circuit Breaker Failure Protection (optional) 518
4.19 Monitoring Functions 519
4.20 Transmission of Binary Information (optional) 521
4.21 User-defined Functions (CFC) 522
4.22 Additional Functions 526
4.23 Dimensions 529
4.23.1 Housing for Panel Flush Mounting or Cubicle Mounting (Size $^1/_2$) 529
4.23.2 Housing for Panel Flush Mounting or Cubicle Mounting (Size $^1/_1$) 530
4.23.3 Panel Surface Mounting (Housing Size $^1/_2$) 531
4.23.4 Panel Surface Mounting (Housing Size $^1/_1$) 531

A Appendix 533
A.1 Ordering Information and Accessories 534
A.1.1 Ordering Information 534
A.1.1.1 Ordering Code (MLFB) 534
A.1.2 Accessories 539

A.2 Terminal Assignments 543
A.2.1 Panel Flush Mounting or Cubicle Mounting 543
A.2.2 Housing for Panel Surface Mounting 552
A.3 Connection Examples 561
A.3.1 Current Transformer Examples 561
A.3.2 Voltage Transformer Examples 565
A.4 Default Settings 568
A.4.1 LEDs 568
A.4.2 Binary Input 569
A.4.3 Binary Output 570
A.4.4 Function Keys 570
A.4.5 Default Display 571
A.4.6 Pre-defined CFC Charts 572
A.5 Protocol-dependent Functions 573
A.6 Functional Scope 574
A.7 Settings 576
A.8 Information List 593
A.9 Group Alarms 627
A.10 Measured Values 628

Literature 633

Glossary 635

Index 647

Introduction

1

The SIPROTEC 4 7SA522 is introduced in this chapter. The device is presented in its application, characteristics, and functional scope.

1.1	Overall Operation	20
1.2	Application Scope	23
1.3	Characteristics	26

1.1 Overall Operation

The digital distance protection SIPROTEC 4 7SA522 is equipped with a powerful microprocessor system. All tasks, such as the acquisition of the measured quantities and the issuing of commands to circuit breakers, are processed in a completely digital way.. Figure 1-1 shows the basic structure of the 7SA522.

Analog Inputs

The measuring inputs (MI) convert the currents and voltages coming from the instrument transformers and adapt them to the level appropriate for the internal processing of the device. The device has 4 current and 4 voltage inputs. Three current inputs are provided for measurement of the phase currents, a further measuring input (I_4) may be configured to measure the earth current (residual current from the current transformer star-point), the earth current of a parallel line (for parallel line compensation) or the star-point current of a power transformer (for earth fault direction determination).

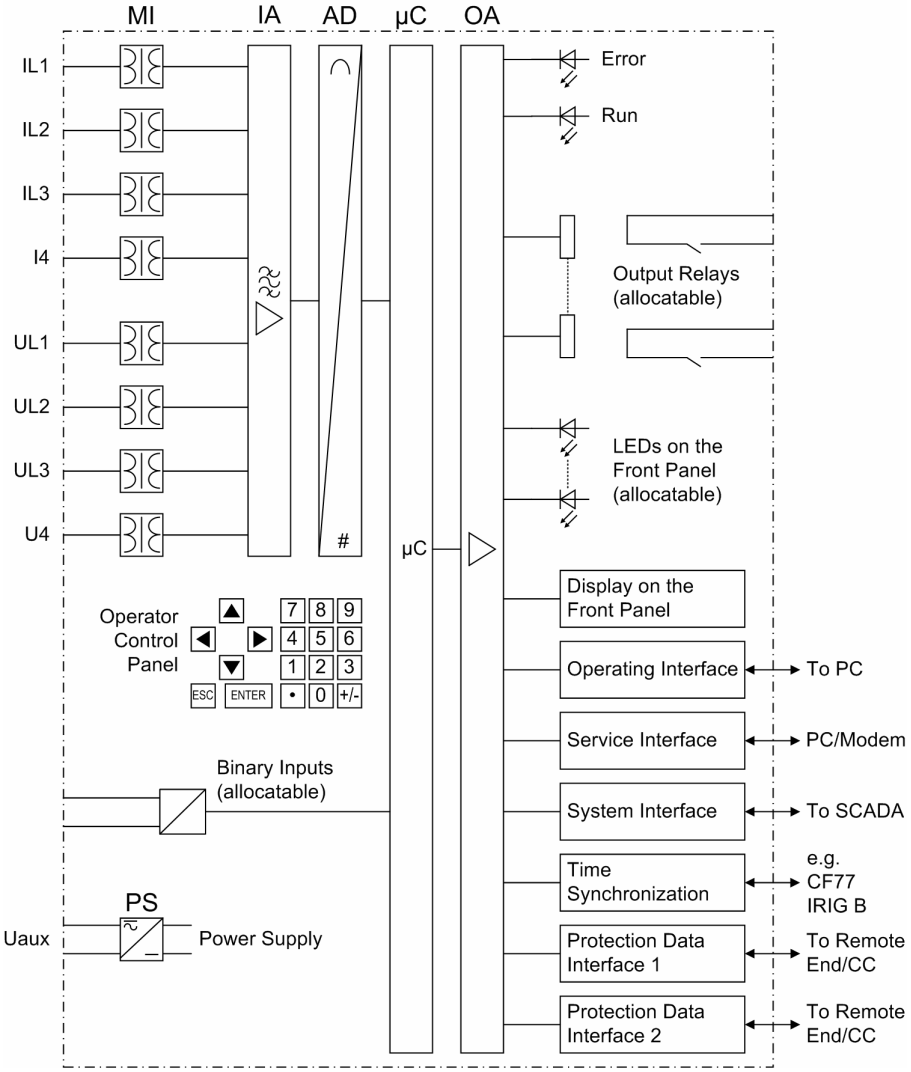

Figure 1-1 Hardware structure of the digital Distance Protection 7SA522

A voltage measuring input is provided for each phase-earth voltage. A further voltage input (U_4) may optionally be used to measure either the displacement voltage (e-n voltage), or the additiona voltage of synchronism and voltage check or any other voltage U_x (for overvoltage protection). The analog signals are then routed to the input amplifier group “IA”.

The input amplifier group IA provides high-resistance termination for the analog input quantities. It comprises filters that are optimized for measured value processing with regard to bandwidth and processing speed.

The AD analog digital converter group contains analog/digital converters and memory components for data transfer to the microcomputer system.

Microcomputer System

Apart from processing the measured values, the microcomputer system µC also executes the actual protection and control functions consisting of:

- Filtering and conditioning of the measured signals
- Continuous monitoring of the measured quantities
- Monitoring of the pickup conditions for the individual protection functions
- Monitoring of limit values and time sequences
- Control of signals for logical functions
- Reaching trip and close command decisions
- Recording of messages, fault data and fault values for analysis
- Administration of the operating system and its functions, e.g. data storage, realtime clock, communication, interfaces, etc.

The information is provided via output amplifier OA.

Binary Inputs and Outputs

Binary inputs from and outputs to the computer system are routed via the I/O modules (inputs and outputs). The computer system obtains information from the system (e.g remote resetting) or from the external equipment (e.g. blocking commands). Outputs are commands that are issued to the switching devices and messages for remote signalling of important events and states.

Front Elements

LEDs and an LC display provide information on the function of the device and indicate events, states and measured values.

Integrated control and numeric keys in conjunction with the LCD facilitate local communication with the device. Thus, all information of the device, e.g. configuration and setting parameters, operating and fault messages, and measured values can be retrieved or changed (see also chapter 2 and SIPROTEC 4 System Description).

Devices with control functions also allow control of switchgear from the front panel.

Serial Interfaces

Communication with a personal computer using the DIGSI software program is possible via the serial operator interface. This allows all device functions to be handled conveniently.

The serial service interface can also be used for communication with a personal computer using DIGSI. This port is especially well suited for a permanent connection of the devices to the PC or for operation via a modem.

All device data can be transmitted to a control center through the serial system interface. Various protocols and physical arrangements are available for this interface to suit a particular application.

An additional interface is provided for time synchronization of the internal clock through external synchronization sources.

Further communication protocols can be realized via additional interface modules.

Protection Data Interfaces (optional)

Depending on the version, there are one or two protection data interfaces available. Via these interfaces, the data for the teleprotection scheme and further information such as closing of the local circuit breaker and other externally coupled trip commands and binary information can be transmitted to other ends.

Power Supply

The functional units described are powered by a power supply, PS, with adequate power in the different voltage levels. Brief supply voltage dips which may occur during short circuits in the auxiliary voltage supply of the substation, are usually bridged by a capacitor (see also Technical Data, Section 4.1).

1.2 Application Scope

The digital distance protection SIPROTEC 4 7SA522 is a selective and extremely fast protection for overhead lines and cables with single- and multi-ended infeeds in radial, ring or any type of meshed systems at any voltage levels. The network neutral can be earthed, compensated or isolated.

The device incorporates the functions which are normally required for the protection of an overhead line feeder and is therefore capable of universal application. It may also be applied as time-graded back-up protection to all types of comparison protection schemes used on lines, transformers, generators, motors and busbars at all voltage levels.

The devices located at the ends of the protected zone exchange measuring information via teleprotection functions with conventional connections (contacts) or via optional protection data interfaces using dedicated communication links (usually fibre optic cables) or a communication network. If the 7SA522 devices are equipped with one protection data interface, they can be used for a protection object with two ends. Lines with three ends (teed feeders) require at least one device with two protection data interfaces.

Protection Functions

The basic function of the device is the recognition of the distance to the fault with distance protection measurement. In particular for complex multiphase faults, the distance measurement is designed with multiple measuring elements. Different pickup schemes enable adaptation to system conditions and the user's protection philosophy. The network neutral can be isolated, compensated or earthed (with or without earth current limiting). The use on long, heavily-loaded lines is possible with or without series compensation.

The distance protection may be supplemented by teleprotection using various signal transmission schemes (for fast tripping on 100 % of the line length). In addition, an earth fault protection for high resistance earth faults (ordering option) is available. It may be directional or non-directional and may also be incorporated in signal transmission schemes. On lines with weak or no infeed at one line end, it is possible to achieve fast tripping at both line ends by means of the signal transmission schemes. When switching onto a fault along the line, an undelayed trip signal can be emitted.

In the event of a failure of the measured voltages due to a fault in the secondary circuits (e.g. trip of the voltage transformer mcb or a blown fuse), the device can automatically revert to emergency operation with an integrated overcurrent protection, until such time as the measured voltage returns. Alternatively, the time delayed overcurrent protection may be used as back-up time delayed overcurrent protection, i.e. it functions independently and in parallel to the distance protection.

Depending on the version ordered, most short-circuit protection functions may also trip single-pole. They may operate in co-operation with an integrated automatic reclosure (optional ordering feature) with which single-pole, three-pole or single- and three-pole automatic reclosures as well as multi-shot automatic reclosure are possible on overhead lines. Before reclosure after three-pole tripping, the valid status for reclosure can be checked by the device through voltage and/or synchronism check (optional ordering feature). It is possible to connect an external automatic reclosure and/or synchronism check, as well as double protection with one or two automatic reclosure functions.

Apart from the mentioned fault protection functions, additional protection functions are possible, such as multi-stage overvoltage, undervoltage and frequency protection, circuit breaker failure protection and protection against effects of power swings (simultaneously active as power swing blocking for the distance protection).To assist in localizing the fault as fast as possible after an incident, a fault location with optional load compensation for improved accuracy is incorporated in the device.

Digital Transmission of Protection Data (optional)

If the distance protection is to be complemented by digital teleprotection schemes, the data required for this purpose can be transmitted via the protection data interface by employing a digital communication link. Communication via the protection data interfaces can be used for transmitting additional information, e.g. measured values, binary commands and other information can be transmitted.

With more than two devices (= ends of the protected object) and when using optional protection data interfaces, the communication can be built up as a ring. This enables a redundant operation in case a communication line fails. The devices will automatically find the remaining healthy communication lines. But even with two ends, communication lines can be doubled to create redundancies.

Control Functions

The device is equipped with control functions which operate, close and open, switchgear devices via control keys, the system interface, binary inputs and a PC with DIGSI software. The status of the primary equipment can be transmitted to the device via auxiliary contacts connected to binary inputs. The present status (or position) of the primary equipment can be displayed on the device, and used for interlocking or plausibility monitoring. The number of the devices to be switched is limited by the binary inputs and outputs available in the device or the binary inputs and outputs allocated for the switch position feedbacks. Depending on the mode of operation, one binary input (single point indication) or two binary inputs (double point indication) can be used. The capability of switching primary equipment can be restricted by appropriate settings for the switching authority (remote or local), and by the operating mode (interlocked/non-interlocked, with or without password validation). Interlocking conditions for switching (e.g. switchgear interlocking) can be established using the integrated user-defined logic.

Indications and Measured Values; Fault Recording

The operational indications provide information about conditions in the power system and the device. Measurement quantities and values that are calculated can be displayed locally and communicated via the serial interfaces.

Device messages can be assigned to a number of LEDs on the front panel (programmable), can be externally processed via output contacts (programmable), linked with user-definable logic functions and/or issued via serial interfaces (see Communication below).

During a fault (system fault) important events and changes in conditions are saved in fault logs. Instantaneous fault values are also saved in the device and may be analysed at a later time.

Communication

Serial interfaces are available for the communication with operating, control and memory systems.

A 9-pin DSUB socket on the front panel is used for local communication with a personal computer. By means of the SIPROTEC 4 operating software DIGSI, all operational and evaluation tasks can be executed via this operator interface, such as specifying and modifying configuration parameters and settings, configuring user-specific logic functions, retrieving operational and fault messages and measured values, reading out and displaying fault recordings, inquiring device conditions and measured values, issuing control commands.

To establish an extensive communication with other digital operating, control and memory components the device may be provided with further interfaces depending on the order variant.

The service interface can be operated via the RS232 or RS485 interface and also allows communication via modem. For this reason, remote operation is possible via PC and the DIGSI operating software, e.g. to operate several devices via a central PC.

The system interface is used for central communication between the device and a control center. It can be operated through the RS232, the RS485 or the FO port. Several standardized protocols are available for data transmission. An EN 100 module allows integrating the devices into 100 MBit Ethernet communication networks of the process control and automation system, using IEC 61850 protocols. In parallel to the link with the process control and automation system, this interface can also handle DIGSI communication and inter-relay communication using GOOSE messaging.

Another interface is provided for the time synchronization of the internal clock via external synchronization sources (IRIG-B or DCF77).

Other interfaces provide for communication between the devices at the ends of the protected object. These protection data interfaces have been mentioned above in the protection functions.

The operator and service interface allow operation of the device remotely or locally, using a standard browser. This can be used during commissioning, maintenance and also during operation of the devices at all ends of the protected object using a communication network. For this application, a special tool, the „WEB Monitor“, is provided. This tool has been optimized for distance protection.

1.3 Characteristics

General Features

- Powerful 32-bit microprocessor system
- Complete digital processing of measured values and control, from the sampling and digitizing of the measure quantities up to the closing and tripping commands to the circuit breakers
- Complete galvanic separation and interference immunity of the internal processing circuits from the measurement, control, and power supply circuits by analog input transducers, binary inputs and outputs and the DC/DC or AC/DC converters
- Complete scope of functions which is normally required for the protection of a line feeder
- digital protection data transmission, may be used for teleprotection with permanent monitoring of disturbance, fault or transfer time deviations in the communication network with automatic runtime re-adjustment
- Distance protection system realizable for up to three ends
- Simple device operation using the integrated operator panel or a connected personal computer with operator guidance
- Storage of fault indications and instantaneous values for fault recording

Distance Protection

- Protection for all types of faults in systems with earthed, compensated or isolated starpoint
- Selectable polygonal tripping characteristic or MHO characteristic;
- reliable differentiation between load and short-circuit conditions also in long, high-loaded lines
- high-sensitivity in the case of a system with week in-feed, extreme stability against load jumps and power swings
- optimum adaptation to the line parameters by means of the polygonal tripping characteristic with diverse configuration parameters and„load trapezoid“ (elimination of the possible load impedance)
- 6 measuring systems for each distance zone
- 7 distance zones, selectable as forward, reverse or non-directional, one of which may be used as a controlled overreach zone
- 10 time stages for the distance zones
- Direction determination (with polygon) or polarisation (with MHO-circle) is done with unfaulted loop (quadrature) voltages and voltage memory, thereby achieving unlimited directional sensitivity, which is not affected by capacitive voltage transformer transients;
- suitable for lines with series compensation
- insensitive to current transformer saturation
- compensation against the influence of a parallel line can be implemented
- shortest tripping time is approx. 17 ms (for f_N = 50 Hz) or 15 ms (for f_N = 60 Hz)
- phase segregated tripping (in conjunction with single-pole or single- and three-pole auto-reclosure)
- non-delayed tripping following switch onto fault is possible
- seperate earth impedance compensation setting pair (RE/RL and XE/XL) for zone 1 and other zones

Power Swing Supplement (optional)

- Power swing detection with dZ/dt measurement from three measuring systems
- Power swing detection up to 10 Hz swing frequency
- Remains in service also during single-pole dead times
- settable power swing programs
- prevention of undesired tripping by the distance protection during power swings
- Tripping for out-of-step conditions can be configured

Teleprotection Supplement

- Different schemes which may be set:
- Permissive Underreach Transfer Trip = PUTT (via a separately settable overreach zone);
- Comparison schemes (Permissive Overreach Transfer Trip = POTT or blocking schemes, with separate overreach zone);
- suitable for lines with two or three ends
- Phase segregated transmission possible in lines with two ends
- Optional signal exchange of the devices via dedicated communication connections (in general optical fibres) or a communication network, in this case a phase segregated transmission with two or three line ends and continuous monitoring of the communication paths and the signal propagation delay with automatic re-adjustment takes place

Earth Fault Protection (optional)

- Time overcurrent protection with a maximum of three definite time stages (DT) and one inverse time stage (IDMT) for high resistance earth faults in earthed systems
- For inverse-time overcurrent protection a selection from various characteristics based on several standards is possible
- The inverse time stage can additionally be set as fourth definite time stage
- High-sensitivity (depending on the version from 3 mA is possible)
- Phase current restraint against error currents due to tolerances in the current transformer measurement
- Second harmonic inrush restraint
- Optional earth fault protection with an inverse tripping time dependent on zero sequence voltage or zero sequence power
- Each stage can be set to be non-directional or directional in the forward or reverse direction
- Single-pole tripping enabled by integrated phase selector
- Direction determination with automatic selection of the larger of zero sequence voltage or negative sequence voltage (U_0, I_Y or U_2), with zero sequence system quantities (I_0, U_0), with zero sequence current and transformer starpoint current (I_0, I_Y), with negative sequence system quantities (I_2, U_2) or with zero sequence power ($3I_0 \cdot 3U_0$)
- One or more stages may function in conjunction with a signal transmission supplement; also suited for lines with three ends
- Instantaneous tripping by any stage when switching onto a fault

Transmission of Information (only with Digital Protection Data Transmission)

- Transmission of the measured values from all ends of the protected object
- Transmission of four commands to all ends
- Transmission of twenty-four additional binary signals to all ends.

Tripping at Line Ends with no or Weak Infeed

- Possible in conjunction with teleprotection schemes
- Allows fast tripping at both line ends, even if there is no or only weak infeed available at one line end
- Phase segregated tripping and single-pole automatic reclosure is possible (version with single-phase tripping)

External Direct and Remote Tripping

- Tripping at the local line end from an external device via a binary input
- Tripping of the remote line end by internal protection functions or an external device via a binary input (with teleprotection)

Time Overcurrent Protection

- Optional as emergency function in the case of measured voltage failure, or as backup function independent of the measured voltage
- Two definite time stages (DT) and one inverse time stage (IDMT), each for phase currents and earth current
- For inverse-time overcurrent protection select from various characteristics based on several standards
- Blocking capability e.g. for reverse interlocking with any stage
- Instantaneous tripping by any stage when switching onto a fault
- Additional stage, e.g. stub protection, for fast tripping of faults between the current transformer and line isolator (when the isolator switching status feedback is available); particularly well suited to substations with $1^1/_2$ circuit breaker arrangements.

Instantaneous High-Current Switch-onto-Fault Protection

- Fast tripping for all faults on total line length
- Selectable for manual closure or following each closure of the circuit breaker
- with integrated line energisation detection

Automatic Reclosure Function (optional)

- For reclosure after 1-pole, 3-pole or 1-pole and 3-pole tripping
- Single or multiple reclosure (up to eight reclosure attempts)
- With separate action time setting for the first 4 reclose attempts, optionally without action times
- With separate dead times after 1-pole and 3-pole tripping, separate for the first four reclosure attempts
- Controlled optionally by protection pickup with separate dead times after 1-pole , 2-pole or 3-pole pickup
- Optionally with adaptive dead time, reduced dead time and dead line check

Synchronism and Voltage Check (optional)

- Verification of the synchronous conditions before reclosing after three-pole tripping
- Fast measurement of the voltage difference U_{diff}, the phase angle difference φ_{diff} and the frequency difference f_{diff}
- Alternatively, check of the de-energized state before reclosing
- Closing at asynchronous system conditions with consideration of the CB closing time to scieve system reconnection when voltages are in phase
- Settable minimum and maximum voltage
- Verification of the synchronous conditions or de-energized state before manual closing of the circuit breaker is possible with separate setting thresholds and states
- Phase angle compensation for voltage measurement behind a transformer
- Measuring voltages optionally phase-phase or phase-earth

Voltage Protection (optional)

- Overvoltage and undervoltage detection with different stages
- Two overvoltage stages for the phase-earth voltages
- Two overvoltage stages for the phase-phase voltages
- Two overvoltage stages for the positive sequence voltage, optionally with compounding
- Two overvoltage stages for the negative sequence voltage
- Two overvoltage stages for the zero sequence voltage or any other single-phase voltage
- Settable dropout to pickup ratios
- Two undervoltage stages for the phase-earth voltages
- Two undervoltage stages for the phase-phase voltages
- Two undervoltage stages for the positive sequence voltage
- Settable current criterion for undervoltage protection functions

Frequency Protection (optional)

- Monitoring on underfrequency (f<) and/or overfrequency (f>) with 4 frequency limits and delay times that are independently adjustable
- Very insensitive to harmonics and abrupt phase angle changes
- Large frequency range (approx. 25 Hz to 70 Hz)

Fault Location

- Initiated by trip command or dropout of the pickup;
- Computation of the distance to fault with dedicated measured value registers
- Fault location output in Ohm, kilometers or miles and % of line length
- Parallel line compensation can be selected
- Taking into consideration the load current in case of single-phase earth faults fed from both sides (configurable)
- Output of the fault location also possible in BCD code (depending on the order variant).

Circuit Breaker Failure Protection (optional)

- With definite time current stages for monitoring the current flow through every pole of the circuit breaker
- Separate pickup thresholds for phase and earth currents
- Independent timers for single-pole and three-pole tripping;
- Start by trip command of every internal protection function
- Start by external trip functions possible
- Single-stage or two-stage
- Short dropout and overshoot times

User-defined Logic Functions (CFC)

- Freely programmable combination of internal and external signals for the implementation of user-defined logic functions
- All typical logic functions
- Time delays and limit value inquiries

Commissioning; operation (only with digital transmission of protection data)

- Display of magnitude and phase angle of local and remote measured values
- Display of measured values of the communication link, such as transmission delay and availability

Command Processing

- Switchgear can be switched on and off manually via local control keys, the programmable function keys on the front panel, via the system interface (e.g. by SICAM or LSA), or via the operator interface (using a personal computer and the operating software DIGSI)
- Feedback on switching states via the circuit breaker auxiliary contacts (for commands with feedback)
- Monitoring of the circuit breaker position and of the interlocking conditions for switching operations.

Monitoring Functions

- Availability of the device is greatly increased because of self-monitoring of the internal measurement circuits, power supply, hardware and software
- Monitoring of the current and voltage transformer secondary circuits by means of summation and symmetry checks
- Trip circuit supervision
- Checking for the load impedance, the measured direction and the phase sequence
- Monitoring of the signal transmission of the optional digital communication path

Additional Functions

- Battery buffered real time clock, which may be synchronised via a synchronisation signal (e.g. DCF77, IRIGB via satellite receiver), binary input or system interface
- Continuous calculation and display of measured quantities on the front display. Indication of measured values of the remote end or of all ends (for devices with protection data interfaces)
- Fault event memory (trip log) for the last eight network faults (faults in the power system), with real time stamps
- Fault recording and data transfer for fault recording for a maximum time range of 15seconds
- Switching statistics: Counting of the trip and close commands issued by the device, as well as recording of the fault current data and accumulation of the interrupted fault currents
- Communication with central control and memory components possible via serial interfaces (depending on the options ordered), optionally via RS232, RS485, modem connection or fibre optic cable
- Commissioning aids such as connection and direction checks as well as circuit breaker test functions
- The WEB monitor (installed on a PC or a laptop) widely supports the testing and commissioning procedure by providing a graphic presentation of the protection system with phasor diagrams. All currents and voltages from all ends of the system are displayed on the screen provided that the devices are connected via protection data interfaces.

■

Functions 2

This chapter describes the individual functions of the SIPROTEC 4 device 7SA522. It shows the setting possibilities for each function in maximum configuration. Guidelines for establishing setting values and, where required, formulae are given.

Based on the following information, it can also be determined which of the provided functions should be used.

2.1	General	34
2.2	Distance Protection	59
2.3	Power swing detection (optional)	114
2.4	Protection data interfaces and communication topology (optional)	120
2.5	Remote signals via protection data interface (optional)	129
2.6	Teleprotection for distance protection	132
2.7	Earth fault overcurrent protection in earthed systems (optional)	156
2.8	Teleprotection for earth fault overcurrent protection (optional)	187
2.9	Measures for Weak and Zero Infeed	205
2.10	External direct and remote tripping	217
2.11	Overcurrent protection (optional)	219
2.12	Instantaneous high-current switch-on-to-fault protection (SOTF)	235
2.13	Automatic reclosure function (optional)	237
2.14	Synchronism and voltage check (optional)	268
2.15	Under and over-voltage protection (optional)	281
2.16	Frequency protection (optional)	300
2.17	Fault locator	306
2.18	Circuit breaker failure protection (optional)	311
2.19	Monitoring Function	328
2.20	Function Control and Circuit Breaker Test	351
2.21	Auxiliary Functions	372
2.22	Command Processing	394

2.1 General

A few seconds after the device is switched on, the initial display appears in the LCD.

Configuration settings can be entered by using a PC and the DIGSI operating software and transferred via the operator interface on the front panel of the device or via the service interface. The procedure is described in detail in the SIPROTEC 4 System Description. Entry of password no. 7 (parameter set) is required to modify configuration settings. Without the password, the settings may be read, but may not be modified and transmitted to the device.

The function parameters, i.e. function options, threshold values, etc., can be changed via the front panel of the device, or via the operator or service interface from a personal computer using DIGSI. The level 5 password (individual parameters) is required.

2.1.1 Functional Scope

2.1.1.1 Configuration of the Scope of Functions

The 7SA522 device contains a series of protection and additional functions. The hardware and firmware is designed for this scope of functions. Additionally, the command functions can be matched to the system conditions. Furthermore, individual functions may be enabled or disabled during configuration, or interaction between functions may be adjusted.

Example for the configuration of scope of functions:

A substation has feeders with overhead lines and transformers. Fault location is to be performed on the overhead lines only. In the devices for the transformer feeders this function is therefore set to „Disabled“.

The available protection functions and additional functions can be configured as ***Enabled*** or ***Disabled***. For some functions, a choice between several options is possible which are described below.

Functions configured as ***Disabled*** are not processed by the 7SA522. There are no indications, and corresponding settings (functions, limit values) are not displayed during setting.

Note

The functions and default settings available depend on the device version ordered.

2.1.1.2 Setting Notes

Configuring the functional scope

The scope of functions with the available options is set in the **Functional Scope** dialog box to match plant requirements.

Most settings are self-explanatory. The special cases are described below:

Special Cases

For communication of the protection signals, each device may feature one or two protection data interfaces (depending on the ordered version). Determine at address 145 whether to use protection data interface 1 with setting **STATE PROT I 1** or interface 2 at address 146 with setting **STATE PROT I 2**. A protected object with two ends requires at least one protection data interface for each relay. If there are more ends, it must be ensured that all associated devices are connected directly or indirectly (via other devices). Subsection 2.4 „Protection Data Topology“ provides more information.

If use of the setting group changeover function is desired, address 103 **Grp Chge OPTION** should be set to ***Enabled***. In this case, up to four different groups of settings may be changed quickly and easily during device operation (see also Section 2.1.3). With the setting ***Disabled*** only one parameter group is available.

Address 110 **Trip mode** is only valid for devices that can trip single-pole or three-pole. Set ***1-/3pole*** to enable also single-pole tripping, i.e. if you want to utilise single-pole or single-pole/three-pole automatic reclosure. This requires that an internal automatic reclosure function exists or that an external reclosing device is used. Furthermore, the circuit breaker must be capable of single-pole tripping.

Note

If you have changed address 110, save your changes first via **OK** and reopen the dialog box since the other setting options depend on the selection in address 110.

Depending on the distance protection model, you can select the tripping characteristic. This setting is made in address 112 for the phase-phase measuring units **Phase Distance** and in address 113 for the phase-earth measuring units **Earth Distance**. You can select between the polygonal tripping characteristic ***Quadrilateral*** and the ***MHO*** characteristic. Sections 2.2.3 and 2.2.2 provide a detailed overview of the characteristics and measurement methods. The two adresses can be set seperately and differently. If the device is to be used only for phase-earth loops or only for phase-phase loops, set the function that is not required to ***Disabled***. If only one of the characteristic options is available in the device, the relevant setting options are hidden.

To complement the distance protection by teleprotection schemes, you can select the desired scheme at address 121 **Teleprot. Dist.**. You can select the underreach transfer trip with overreach zone ***PUTT (Z1B)***, the teleprotection scheme***POTT***, the unblocking scheme ***UNBLOCKING*** and the blocking scheme ***BLOCKING***. If the device features a protection data interface for communication via digital transmission lines, set ***SIGNALv.ProtInt*** here. The procedures are described in detail in Section 2.2.1. If you do not want to use teleprotection in conjunction with distance protection, set ***Disabled***.

If a pickup of zone Z1 of the distance protection shall be possible only after exceeding an additional current threshold value, set the parameter 119 **Iph>(Z1)** to ***Enabled***. Select the setting ***Disabled*** if the additional threshold value is not required.

The power swing supplement (see also Subsection 2.3) is activated by setting address 120 **Power Swing** = ***Enabled***.

With address 125 **Weak Infeed** you can select a supplement to the teleprotection schemes. Set ***Enabled*** to apply the classic scheme for echo and weak infeed tripping. The setting ***Logic no. 2*** switches this function to the french specification. This setting is available in the device variants for the region France (only version 7SA522*-**D** or 10th digit of order number = D).

At address 126 **Back-Up O/C** you can set the characteristic group that the time overcurrent protection uses for operation. In addition to the definite time overcurrent protection, you can configure an inverse time overcurrent protection depending on the ordered version. The latter operates either according to an IEC characteristic (***TOC IEC***) or an ANSI characteristic (***TOC ANSI***). The various characteristic curves are illustrated in the Technical Data. With the device version for the region Germany (10th digit of ordering code = A), the third definite time overcurrent stage is only availabe if the setting ***TOC IEC /w 3ST*** is active. You can also disable the time overcurrent protection (***Disabled***).

At address 131 **Earth Fault O/C** you can set the characteristic group which the earth fault protection uses for operation. In addition to the definite time overcurrent protection, which covers up to three phases, an inverse-time earth fault protection function may be configured depending on the ordered version. The latter operates either according to an IEC characteristic (***TOC IEC***) or an ANSI characteristic (***TOC ANSI***) or according to a logarithmic-inverse characteristic (***TOC Logarithm.***). If an inverse-time characteristic is not required, the stage usually designated „inverse time“ can be used as the fourth definite time stage (***Definite Time***). Alternatively, it is possible to select an earth fault protection with inverse-time characteristic ***U0 inverse*** (only for region Germany, 10th digit of the ordering code = A) or a zero sequence power protection ***Sr inverse*** (only for region France, 10th digit of ordering code = D). For the characteristics please refer to the Technical Data. You can also disable the earth fault protection (***Disabled***).

When using the earth fault protection, it can be complemented by teleprotection schemes. Select the desired scheme at address 132 **Teleprot. E/F**. You can select the direction comparison scheme ***Dir.Comp.Pickup***, the unblocking scheme ***UNBLOCKING*** and the blocking scheme ***BLOCKING***. The procedures are described in detail in Section 2.8. If the device features a protection data interface for communication via a digital link, set ***SIGNALv.ProtInt*** here. If you do not want to use teleprotection in conjunction with earth fault protection set ***Disabled***.

Address 145 **P. INTERFACE 1** and, where required, address 146 **STATE PROT I 2** are also valid for communication of the teleprotection for earth fault protection via teleprotection interface, as described above.

If the device features an automatic reclosing function, address 133 and 134 are of importance. Automatic reclosure is only permitted for overhead lines. It must not be used in any other case. If the protected object consists of a combination of overhead lines and other equipment (e.g. overhead line in unit with a transformer or overhead line/cable), reclosure is only permissible if it can be ensured that it can only take place in the event of a fault on the overhead line. If no automatic reclosing function is desired for the feeder at which 7SA522 operates, or if an external device is used for reclosure, set address 133 **Auto Reclose** to ***Disabled***.

Otherwise set the number of desired reclosing attempts there. You can select ***1 AR-cycle*** to ***8 AR-cycles***. You can also set ***ADT*** (adaptive dead times); in this case the behaviour of the automatic reclosure function is determined by the cycles of the remote end. The number of cycles must however be configured at least in one of the line ends which must have a reliable infeed. The other end — or other ends, if there are more than two line ends — may operate with adaptive dead time. Section 2.13 provides detailed information on this topic.

The **AR control mode** at address 134 allows a total of four options. On the one hand, it can be determined whether the auto reclose cycles are carried out according to the fault type detected by the **pickup** of the starting protection function(s) (only for three-pole tripping) or according to the type of **trip command**. On the other hand, the automatic reclosure function can be operated **with** or **without** action time.

The setting ***Trip with T-action*** / ***Trip without T-action ...*** (default setting = Trip with T-action ...) is preferred if single-pole or single-pole/three-pole auto reclose cycles are provided for and possible. In this case, different dead times (for every AR cycle) are possible after single-pole tripping and after three-pole tripping. The tripping protection function determines the type of tripping: Single-pole or three-pole. The dead time is controlled in dependence on this.

The setting ***Pickup with T-action*** / ***Pickup without T-action ... ...*** (Pickup with T-action ...) is only possible and visible if only three-pole tripping is desired. This is the case when either the ordering number of the device model indicates that it is only suited for three-pole tripping, or when only three-pole tripping is configured (address 110 **Trip mode** = ***3pole only***, see above). In this case, different dead times can be set for the auto reclose cycles following 1-, 2- and 3-phase faults. The decisive factor here is the **pickup** situation of the protection functions at the instant the trip command disappears. This operating mode enables making the dead times dependent on the type of fault also for three-pole reclosure cycles. Tripping is always three-pole.

The setting ***Trip with T-action*** with action time) provides an action time for each auto-reclose cycle. The action time is started by a general pickup of all protection functions. If there is no trip command yet when the action time has expired, the corresponding automatic reclosure cycle cannot be executed. Section 2.13 provides detailed information on this topic. This setting is recommended for time-graded protection. If the protection function which is to operate with automatic reclosure, does not have a general pickup signal for starting the action times, select ***Trip without T-action...*** (without action time).

Address 137 **U/O VOLTAGE** allows activating the voltage protection function with a variety of undervoltage and overvoltage protection stages. In particular, the overvoltage protection with the positive sequence system of the measuring voltages provides the option to calculate the voltage at the other, remote line end via integrated compounding. This is particularly useful for long transmission lines where no-load or low-load conditions prevail and an overvoltage at the other line end (Ferranti effect) is to cause tripping of the local circuit breaker. In this case set address 137 **U/O VOLTAGE** to ***Enabl. w. comp.*** (enabled with compounding). Do not use compounding on lines with series capacitors!

For the fault location you can determine at address 138 **Fault Locator**, in addition to ***Enabled*** and ***Disabled***, that the fault distance is output in BCD code (4 bit units, 4 bit tens and 1 bit hundreds and „data valid“) via binary outputs (***with BCD-output***). A corresponding number of output relays (No. 1143 to 1152) must be made available and allocated for this purpose.

For the trip circuit supervision set at address 140 **Trip Cir. Sup.** the number of trip circuits to be monitored: ***1 trip circuit***, ***2 trip circuits*** or ***3 trip circuits***, unless you omit it (***Disabled***).

2.1.1.3 Settings

Addr.	Parameter	Setting Options	Default Setting	Comments
103	Grp Chge OPTION	Disabled Enabled	Disabled	Setting Group Change Option
110	Trip mode	3pole only 1-/3pole	3pole only	Trip mode
112	Phase Distance	Quadrilateral MHO Disabled	Quadrilateral	Phase Distance
113	Earth Distance	Quadrilateral MHO Disabled	Quadrilateral	Earth Distance
119	Iph>(Z1)	Disabled Enabled	Disabled	Additional Threshold Iph>(Z1)
120	Power Swing	Disabled Enabled	Disabled	Power Swing detection
121	Teleprot. Dist.	PUTT (Z1B) POTT UNBLOCKING BLOCKING SIGNALv.ProtInt Disabled	Disabled	Teleprotection for Distance prot.
122	DTT Direct Trip	Disabled Enabled	Disabled	DTT Direct Transfer Trip
124	SOTF Overcurr.	Disabled Enabled	Disabled	Instantaneous HighSpeed SOTF Overcurrent
125	Weak Infeed	Disabled Enabled Logic no. 2	Disabled	Weak Infeed (Trip and/or Echo)
126	Back-Up O/C	Disabled TOC IEC TOC ANSI TOC IEC /w 3ST	TOC IEC	Backup overcurrent

Addr.	Parameter	Setting Options	Default Setting	Comments
131	Earth Fault O/C	Disabled TOC IEC TOC ANSI TOC Logarithm. Definite Time U0 inverse Sr inverse	Disabled	Earth fault overcurrent
132	Teleprot. E/F	Dir.Comp.Pickup SIGNALv.ProtInt UNBLOCKING BLOCKING Disabled	Disabled	Teleprotection for Earth fault overcurr.
133	Auto Reclose	1 AR-cycle 2 AR-cycles 3 AR-cycles 4 AR-cycles 5 AR-cycles 6 AR-cycles 7 AR-cycles 8 AR-cycles ADT Disabled	Disabled	Auto-Reclose Function
134	AR control mode	Pickup w/ Tact Pickup w/o Tact Trip w/ Tact Trip w/o Tact	Trip w/ Tact	Auto-Reclose control mode
135	Synchro-Check	Disabled Enabled	Disabled	Synchronism and Voltage Check
136	FREQUENCY Prot.	Disabled Enabled	Disabled	Over / Underfrequency Protection
137	U/O VOLTAGE	Disabled Enabled Enabl. w. comp.	Disabled	Under / Overvoltage Protection
138	Fault Locator	Enabled Disabled with BCD-output	Enabled	Fault Locator
139	BREAKER FAILURE	Disabled Enabled enabled w/ 3I0>	Disabled	Breaker Failure Protection
140	Trip Cir. Sup.	Disabled 1 trip circuit 2 trip circuits 3 trip circuits	Disabled	Trip Circuit Supervision
145	P. INTERFACE 1	Enabled Disabled IEEE C37.94	Enabled	Protection Interface 1 (Port D)
146	P. INTERFACE 2	Disabled Enabled IEEE C37.94	Disabled	Protection Interface 2 (Port E)
147	NUMBER OF RELAY	2 relays 3 relays	2 relays	Number of relays

2.1.2 Power System Data 1

The device requires some plant and power system data in order to be able to adapt its functions accordingly, depending on the actual application. The data required include for instance rated data of the substation and the measuring transformers, polarity and connection of the measured quantities, if necessary features of the circuit breakers, and others. Furthermore, there are several function parameters associated with several functions rather than one specific protection, control or monitoring function. The Power System Data 1 can only be changed from a PC running DIGSI and are discussed in this section.

2.1.2.1 Setting Notes

General

In DIGSI double-click on Settings to display the relevant selection. A dialog box with the tabs Transformers, Power System and Breaker will open under **`Power System Data 1`** in which you can configure the individual parameters. The following subsections are structured in the same way.

Current Transformer Polarity

In address 201 **`CT Starpoint`**, the polarity of the wye-connected current transformers is specified (the following figure also goes for only two current transformers). The setting determines the measuring direction of the device (forward = line direction). A change in this setting also results in a polarity reversal of the earth current inputs I_E or I_{EE}.

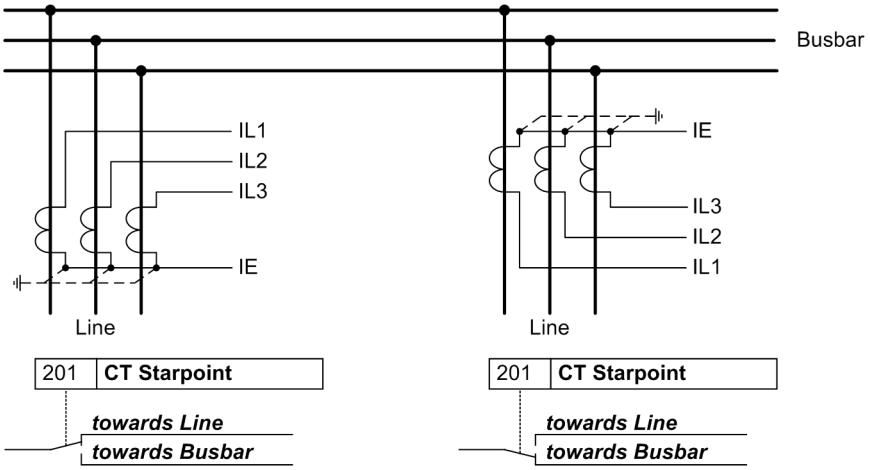

Figure 2-1 Polarity of current transformers

Nominal Values of the Transformers

In addresses 203 **`Unom PRIMARY`** and 204 **`Unom SECONDARY`** the device obtains information on the primary and secondary rated voltage (phase-to-phase voltage) of the voltage transformers; in address 205 **`CT PRIMARY`** and 206 **`CT SECONDARY`** the primary and secondary rated current transformers are set.

It is important to ensure that the secondary CT nominal current matches the rated current of the device, otherwise the device will be blocked. The nominal current is set with jumpers on the measuring module (see 3.1.2).

Correct entry of the primary data is a prerequisite for the correct computation of operational measured values with primary magnitude. If the settings of the device are performed with primary values using DIGSI, these primary data are an indispensable requirement for the correct function of the device.

Voltage Connection

The device features four voltage measuring inputs, three of which are connected to the set of voltage transformers. Various possibilities exist for the fourth voltage input U_4:

- Connection of the U_4 input to the open delta winding Ue–n of the voltage transformer set:

  Address 210 is then set to: **`U4 transformer`** = ***`Udelta transf.`***.

  When connected to the e-n winding of a set of voltage transformers, the voltage transformation ratio of the voltage transformers is usually:

  $$\frac{U_{Nprim}}{\sqrt{3}} / \frac{U_{Nsec}}{\sqrt{3}} / \frac{U_{Nsec}}{3}$$

  The factor Uph/Udelta (secondary voltage, address 211 **`Uph / Udelta`**) must be set to $3/\sqrt{3} = \sqrt{3} \approx$ ***`1.73`***. For other transformation ratios, e.g. the formation of the displacement voltage via an interconnected transformer set, the factor must be corrected accordingly. This factor is important if the $3U_0$> protection stage is used and for monitoring the measured values and the scaling of the measured values and fault recording values.

- Connection of the U_4 input to perform the synchronism check:

  Address 210 is then set to: **`U4 transformer`** = ***`Usy2 transf.`***.

  If the voltage transformers for the protection functions U_{sy1} are located on the outgoing feeder side, the U_4 transformer has to be connected to a busbar voltage U_{sy2}. Synchronisation is also possible if the voltage transformers for the protection functions U_{sy1} are connected on busbar side, in which case the additional U4 transformer must be connected to a feeder voltage.

  If the transformation ratio differs, this can be adapted with the setting in address 215 **`Usy1/Usy2 ratio`**. In address 212 **`Usy2 connection`**, the type of voltage connected to measuring point U_{sy2} for synchronism check is set. The device then automatically selects the voltage at measuring point U_{sy1}. If the two measuring points used for synchronism check — e.g. feeder voltage transformer and busbar voltage transformer — are not separated by devices that cause a relative phase shift, then the parameter in address 214 φ **`Usy2-Usy1`** is not required. This parameter can only be changed in DIGSI at **Display Additional Settings**. If, however, a power transformer is connected in between, its vector group must be adapted. The phase angle from U_{sy1} to U_{sy2} is evaluated with positive sense.

  Example: (see also Figure 2-2)

  Busbar 400 kV primary, 110 V secondary,

  Feeder 220 kV primary, 100 V secondary,

  Transformer 400 kV / 220 kV, vector group Dy(n) 5

  The transformer vector group is defined from the high voltage side to the low voltage side. In this example, the feeder transformers are those of the low voltage side of the transformer. Since the device „looks“ from the direction of the feeder transformers, the angle is 5 · 30° (according to the vector group) negative, i.e. -150°. A positive angle is obtained by adding 360°:

  Address 214: φ **`Usy2-Usy1`** = 360° - 150° = **210°**.

  The busbar transformers supply 110 V secondary for primary operation at nominal value while the feeder transformers supply 100 V secondary. Therefore, this difference must be balanced:

  Address 215: **`Usy1/Usy2 ratio`** = 100 V / 110 V = **0.91**.

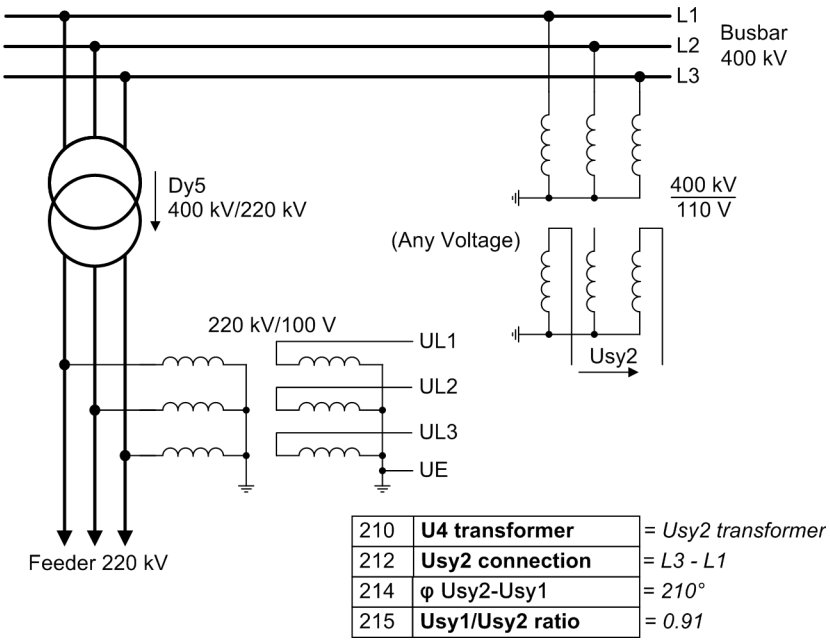

Figure 2-2 Busbar voltage measured via transformer

- Connection of the U_4 input to any other voltage U_X, which can be processed by the overvoltage protection function:

  Address 210 is then set to: **`U4 transformer`** = ***`Ux transformer`***.
- If the input U_4 is not required, set:

  Address 210 **`U4 transformer`** = ***`Not connected`***.

  Factor **`Uph / Udelta`** (address 211, see above) is also of importance in this case, as it is used for scaling the measured data and fault recording data.

Current Connection

The device features four current measurement inputs, three of which are connected to the set of current transformers. Various possibilities exist for the fourth current input I_4:

- Connection of the I_4 input to the earth current in the starpoint of the set of current transformers on the protected feeder (normal connection):

  Address 220 is then set to: **`I4 transformer`** = ***`In prot. line`*** and address 221 **`I4/Iph CT`** = **`1`**.
- Connection of the I_4 input to a separate earth current transformer on the protected feeder (e.g. a summation CT or core balance CT):

  Address 220 is then set to: **`I4 transformer`** = ***`In prot. line`*** and address 221 **`I4/Iph CT`** is set:

$$I_4 / I_{ph\ CT} = \frac{\text{Ratio of earth current transformer}}{\text{Ratio of phase current transformers}}$$

  This is independent of whether the device has a normal measuring current input for I_4 or a sensitive measuring current input.

Example:

Phase current transformers 500 A / 5 A

Earth current transformer 60 A / 1 A

$$I_4 / I_{ph\ CT} = \frac{60/1}{500/5} = 0.600$$

- Connection of the I_4 input to the earth current of the parallel line (for parallel line compensation of the distance protection and/or fault location):

  Address 220 is then set to: **I4 transformer** = ***In paral. line*** and usually address 221 **I4/Iph CT** = 1.

  If the set of current transformers on the parallel line however has a different transformation ratio to those on the protected line, this must be taken into account in address 221:

  Address 220 is then set to: **I4 transformer** = ***In paral. line*** and address 221 **I4/Iph CT** = $I_{N\ paral.\ line}$ / $I_{N\ prot.\ line}$

  Example:

  Current transformers on protected line 1200 A

  Current transformers on parallel line 1500 A

$$I_4 / I_{ph\ CT} = \frac{1500}{1200} = 1.250$$

- Connection of the I_4 input to the starpoint current of a transformer; this connection is occasionally used for the polarisation of the directional earth fault protection:

  Address 220 is then set to: **I4 transformer** = ***IY starpoint***, and address 221 **I4/Iph CT** is according to transformation ratio of the starpoint transformer to the transformer set of the protected line.

- If the input I_4 is not required, set:

  Address 220 **I4 transformer** = ***Not connected***,

  Address 221 **I4/Iph CT** is then irrelevant.

  In this case, the neutral current is calculated from the sum of the phase currents.

Rated frequency

The rated frequency of the power system is set under address 230 **Rated Frequency**. The factory presetting according to the ordering code (MLFB) only needs to be changed if the device is applied in a region different from the one indicated when ordering. You can set ***50 Hz*** or ***60 Hz***.

System Starpoint

The manner in which the system starpoint is earthed must be considered for the correct processing of earth faults and double earth faults. Accordingly, set for address 207 **SystemStarpoint** = ***Solid Earthed***, ***Peterson-Coil*** or ***Isolated***. For low-resistant earthed systems set ***Solid Earthed***.

Phase Rotation

Use address 235 **PHASE SEQ.** to change the default setting (***L1 L2 L3*** for clockwise rotation) if your power system has a permanent anti-clockwise phase sequence (***L1 L3 L2***).

Distance Unit

Address 236 **Distance Unit** determines the distance unit (***km*** or ***Miles***) for the fault location indications. If the compounding function of the voltage protection is used, the overall line capacitance is calculated from the line length and the capacitance per unit length. If compounding is not used and fault location is not available, this parameter is of no consequence. Changing the distance unit will not result in an automatic conversion of the setting values which depend on this distance unit. They have to be re-entered into their corresponding valid addresses.

Mode of the earth impedance (residual) compensation

Matching of the earth to line impedance is an essential prerequisite for the accurate measurement of the fault distance (distance protection, fault locator) during earth faults. In address 237 **Format Z0/Z1** the format for entering the residual compensation is determined. It is possible to use either the ratio ***RE/RL, XE/XL*** or to enter the complex earth (residual) impedance factor ***K0***. The setting of the earth (residual) impedance factors is done in the power system data 2 (refer to Section 2.1.4).

Single-pole tripping on an earth fault

Address 238**EarthFlt0/C 1p** specifies whether the earth-fault settings for single-pole tripping and blocking in the single-pole dead time are accomplished together for all stages (setting ***stages together***) or separately (setting ***stages separat.***). The actual settings are specified in the area of earth fault protection for earthed systems (see section 2.7.2) with the irrelevant addresses hidden. This parameter can only be altered with DIGSI under **Additional Settings**.

Closing time of the circuit breaker

The circuit breaker closing time **T-CB close** at address 239 is required if the device is to close also under asynchronous system conditions, no matter whether for manual closing, for automatic reclosing after three-pole tripping, or both. The device will then calculate the time for the close command such that the voltages are phase-synchronous the instant the breaker poles make contact.

Trip command duration

In address 240 the minimum trip command duration **TMin TRIP CMD** is set. It applies to all protection and control functions which may issue a trip command. It also determines the duration of the trip pulse when a circuit breaker test is initiated via the device. This parameter can only be altered using DIGSI under **Additional Settings**.

In address 241 the maximum close command duration **TMax CLOSE CMD** is set. It applies to all close commands issued by the device. It also determines the length of the close command pulse when a circuit breaker test cycle is issued via the device. It must be long enough to ensure that the circuit breaker has securely closed. There is no risk in setting this time too long, as the close command will in any event be terminated following a new trip command from a protection function. This parameter can only be altered using DIGSI under **Additional Settings**.

Circuit breaker test

The 7SA522 allows a circuit breaker test during operation by means of a tripping and a closing command entered on the front panel or using DIGSI. The duration of the trip command is set as explained above. Address 242 **T-CBtest-dead** determines the duration from the end of the trip command until the start of the close command for this test. It should not be less than 0.1 s.

2.1.2.2 Settings

Addresses which have an appended "A" can only be changed with DIGSI, under Additional Settings.

Addr.	Parameter	Setting Options	Default Setting	Comments
201	CT Starpoint	towards Line towards Busbar	towards Line	CT Starpoint
203	Unom PRIMARY	1.0 .. 1200.0 kV	400.0 kV	Rated Primary Voltage
204	Unom SECONDARY	80 .. 125 V	100 V	Rated Secondary Voltage (Ph-Ph)
205	CT PRIMARY	10 .. 5000 A	1000 A	CT Rated Primary Current
206	CT SECONDARY	1A 5A	1A	CT Rated Secondary Current
207	SystemStarpoint	Solid Earthed Peterson-Coil Isolated	Solid Earthed	System Starpoint is
210	U4 transformer	Not connected Udelta transf. Usy2 transf. Ux transformer	Not connected	U4 voltage transformer is
211	Uph / Udelta	0.10 .. 9.99	1.73	Matching ratio Phase-VT To Open-Delta-VT
212	Usy2 connection	L1-E L2-E L3-E L1-L2 L2-L3 L3-L1	L1-L2	VT connection for Usy2
214A	φ Usy2-Usy1	0 .. 360 °	0 °	Angle adjustment Usy2-Usy1
215	Usy1/Usy2 ratio	0.50 .. 2.00	1.00	Matching ratio Usy1 / Usy2
220	I4 transformer	Not connected In prot. line In paral. line IY starpoint	In prot. line	I4 current transformer is
221	I4/Iph CT	0.010 .. 5.000	1.000	Matching ratio I4/Iph for CT's
230	Rated Frequency	50 Hz 60 Hz	50 Hz	Rated Frequency
235	PHASE SEQ.	L1 L2 L3 L1 L3 L2	L1 L2 L3	Phase Sequence
236	Distance Unit	km Miles	km	Distance measurement unit
237	Format Z0/Z1	RE/RL, XE/XL K0	RE/RL, XE/XL	Setting format for zero seq.comp. format
238A	EarthFltO/C 1p	stages together stages separat.	stages together	Earth Fault O/C: setting for 1pole AR
239	T-CB close	0.01 .. 0.60 sec	0.06 sec	Closing (operating) time of CB
240A	TMin TRIP CMD	0.02 .. 30.00 sec	0.10 sec	Minimum TRIP Command Duration

Addr.	Parameter	Setting Options	Default Setting	Comments
241A	TMax CLOSE CMD	0.01 .. 30.00 sec	0.10 sec	Maximum Close Command Duration
242	T-CBtest-dead	0.00 .. 30.00 sec	0.10 sec	Dead Time for CB test-autoreclosure

2.1.3 Change Group

2.1.3.1 Purpose of the Setting Groups

Up to four different setting groups can be created for establishing the device's function settings. During operation, the user can locally switch between setting groups using the operator panel, binary inputs (if so configured), the operator and service interface from a personal computer or via the system interface. For reasons of safety, it is not possible to change between setting groups during a power system fault.

A setting group includes the setting values for all functions that have been selected as ***Enabled*** during configuration (see Section 2.1.1.2). In 7SA522 devices, four independent setting groups (A to D) are available. Whereas setting values and options may vary, the selected scope of functions is the same for all groups.

Setting groups enable the user to save the corresponding settings for each application. When they are needed, settings may be loaded quickly. All setting groups are stored in the relay. Only one setting group may be active at a given time.

2.1.3.2 Setting Notes

General

If multiple setting groups are not required. Group A is the default selection. Then, the rest of this section is not applicable.

If multiple setting groups are desired, the setting group change option must be set to **`Grp Chge OPTION`** = ***Enabled*** in the relay configuration of the functional scope (Section 2.1.1.2, address 103). Now the 4 setting groups A to D are available. They are configured individually as required in the following. To find out how to proceed, how to copy and to reset settings groups to the delivery state, and how to switch between setting groups during operation, please refer to the SIPROTEC 4 System Description.

Two binary inputs enable changing between the 4 setting groups from an external source.

2.1.3.3 Settings

Addr.	Parameter	Setting Options	Default Setting	Comments
302	CHANGE	Group A Group B Group C Group D Binary Input Protocol	Group A	Change to Another Setting Group

2.1.3.4 Information List

No.	Information	Type of Information	Comments
-	P-GrpA act	IntSP	Setting Group A is active
-	P-GrpB act	IntSP	Setting Group B is active
-	P-GrpC act	IntSP	Setting Group C is active
-	P-GrpD act	IntSP	Setting Group D is active
7	>Set Group Bit0	SP	>Setting Group Select Bit 0
8	>Set Group Bit1	SP	>Setting Group Select Bit 1

2.1.4 Power System Data 2

The general protection data (**P.System Data 2**) include settings associated with all functions rather than a specific protection, monitoring or control function. In contrast to the **P.System Data 1** as discussed before, these can be changed over with the setting groups and can be configured via the operator panel of the device.

2.1.4.1 Setting Notes

Rating of the Protected Object

The rated primary voltage (phase-to-phase) and rated primary current (phases) of the protected equipment are entered in the address 1103 **FullScaleVolt.** and 1104 **FullScaleCurr.**. These settings are required for indication of operationalmeasured values in percent. If these rated values match the primary VT's and CT's, they correspond to the settings in address 203 and 205 (Subsection 2.1.2.1).

General line data

The settings of the line data in this case refer to the common data which is independent of the actual distance protection grading.

The line angle (address 1105 **Line Angle**) may be derived from the line parameters. The following applies:

$$\tan\varphi = \frac{X_L}{R_L} \quad \text{or} \quad \varphi = \arctan\left(\frac{X_L}{R_L}\right)$$

where R_L is the resistance and X_L the reactance of the protected feeder. The line parameters may either apply to the entire line length, or be per unit of line length as the quotient is independent of length. Furthermore, it makes no difference whether the quotients are calculated with primary, or secondary values.

The line angle is of major importance, e.g. for earth impedance matching according to amount and angle or for compounding in overvoltage protection.

Calculation Example:

110 kV overhead line 150 mm^2 with the following data:

$R'_1 = 0.19\ \Omega/\text{km}$

$X'_1 = 0.42\ \Omega/\text{km}$

The line angle is computed as follows

$$\tan\varphi = \frac{X_L}{R_L} = \frac{X'_1}{R'_1} = \frac{0.42\ \Omega/\text{km}}{0.19\ \Omega/\text{km}} = 2.21 \qquad \varphi = 65.7^\circ$$

In address 1105 the setting **Line Angle** = **66°** is entered.

Address 1211 **Distance Angle** specifies the angle of inclination of the R sections of the distance protection polygons. In devices with MHO characteristic, this angle determines also the inclination of the MHO circles. You can usually also set the line angle here as in address 1105.

The directional values (power, power factor, work and based on work: minimum, maximum, average and threshold values), calculated in the operational measured values, are usually defined positive in the direction towards the protected object. This requires that the connection polarity for the entire device was configured accordingly in the Power System Data 1 (compare also „Polarity of Current Transformers“, address 201). But it is also possible to define the „forward“ direction for the protection functions and the positive direction for the power etc. differently, e.g. so that the active power flow (from the line to the busbar) is indicated in the positive sense. Set under address 1107 **P,Q sign** the option ***reversed***. If the setting is ***not reversed*** (default), the positive direction for the power etc. corresponds to the „forward“ direction for the protection functions.

The reactance value X' of the protected line is entered as reference value **x'** at address 1110 in Ω/km if the distance unit was set as kilometers (address 236, see section 2.1.2.1 at „Distance Unit“), or at address 1112 in Ω/mile if miles were selected as distance unit. The corresponding line length is entered at address 1111 **Line Length** in kilometers or at address 1113 in miles. If the distance unit in address 236 is changed after the reactance per unit length in address 1112 or 1111 or the line length in address 1113 or 1110 have been entered, the line data have to be re-entered for the changed unit of length.

The capacitance value C' of the protected line is required for compounding in overvoltage protection. Without compounding it is irrelevant. It is entered as a reference value **c'** at address 1114 in µF/km if set to distance unit kilometers (address 236, see Section 2.1.2.1 at „Distance Unit“), or at address 1115 in µF/mile if miles were set as distance unit. If the distance unit is changed in address 236, then the relevant line data in the addresses from 1110 to 1115 have to be re-entered for the changed unit of length.

When entering the parameters with a personal computer running the DIGSI software, the values can also be entered as primary values. If the nominal quantities of the primary transformers (U, I) are set to minimum, primary values allow only a rough setting of the value parameters. In such cases it is preferable to set the parameters in secondary quantities.

For conversion of primary values to secondary values the following applies in general:

$$Z_{sec} = \frac{\text{Ratio of current transformers}}{\text{Ratio of voltage transformers}} \cdot Z_{prim}$$

Likewise, the following goes for the reactance setting of a line:

$$X'_{sec} = \frac{N_{CT}}{N_{VT}} \cdot X'_{prim}$$

where

N_{CT} = Current transformer ratio

N_{VT} = Transformation ratio of voltage transformer

The following applies for the capacitance per distance unit:

$$C'_{sec} = \frac{N_{VT}}{N_{CT}} \cdot C'_{prim}$$

Calculation Example:

110 kV overhead line 150 mm^2 as above

R'_1 = 0.19 Ω/km

X'_1 = 0.42 Ω/km

C' = 0.008 µF/km

Current Transformer 600 A / 1 A

Voltage transformer 110 kV / 0.1 kV

The secondary per distance unit reactance is therefore:

$$X'_{sec} = \frac{N_{CT}}{N_{VT}} \cdot X'_{prim} = \frac{600\ A / 1\ A}{110\ kV / 0.1\ kV} \cdot 0.42\ \Omega/km = 0.229\ \Omega/km$$

In address 1110 the setting **x' = 0.229** Ω/km is entered.

The secondary per distance unit capacitance is therefore:

$$C'_{sec} = \frac{N_{VT}}{N_{CT}} \cdot C'_{prim} = \frac{110\ kV / 0.1\ kV}{600\ A / 1\ A} \cdot 0.008\ \mu F/km = 0.015\ \mu F/km$$

In address 1114 the setting **c' = 0.015** µF/km is entered.

Earth impedance ratio

Setting of the earth to line impedance ratio is an essential prerequisite for the accurate measurement of the fault distance (distance protection, fault locator) during earth faults. This compensation is either achieved by entering the resistance ratio R_E/R_L and the reactance ratio X_E/X_L or by entry of the complex earth (residual) compensation factor $\underline{K}_0$. Which of these two entry options applies, was determined by the setting in address 237 **Format Z0/Z1** (refer to Section 2.1.2.1). Only the addresses applicable for this setting will be displayed.

Earth Impedance (Residual) Compensation with Scalar Factors R_E/R_L and X_E/X_L

When entering the resistance ratio R_E/R_L and the reactance ratio X_E/X_L the addresses 1116 to 1119 apply. They are calculated separately, and do not correspond to the real and imaginary components of $\underline{Z}_E/\underline{Z}_L$. A computation with complex numbers is therefore not necessary! The ratios are obtained from system data using the following formulas:

Resistance ratio:	Reactance ratio:
$\frac{R_E}{R_L} = \frac{1}{3} \cdot \left(\frac{R_0}{R_1} - 1\right)$	$\frac{X_E}{X_L} = \frac{1}{3} \cdot \left(\frac{X_0}{X_1} - 1\right)$

Where

R_0 = Zero sequence resistance of the line

X_0 = Zero sequence reactance of the line

R_1 = Positive sequence resistance of the line

X_1 = Positive sequence reactance of the line

These values can be applied either to the entire line or as per unit of length values since the quotients are independent of length. Furthermore, it makes no difference whether the quotients are calculated with primary, or secondary values.

Calculation Example:

110 kV overhead line 150 mm^2 with the data

R_1/s	= 0.19 Ω/km positive sequence impedance
X_1/s	= 0.42 Ω/km positive sequence impedance
R_0/s	= 0.53 Ω/km zero sequence impedance
X_0/s	= 1.19 Ω/km zero sequence impedance
(where s	= line length)

For earth impedance ratios, the following emerge:

$$\frac{R_E}{R_L} = \frac{1}{3} \cdot \left(\frac{R_0}{R_1} - 1\right) = \frac{1}{3} \cdot \left(\frac{0.53\ \Omega/\text{km}}{0.19\ \Omega/\text{km}} - 1\right) = 0.60$$

$$\frac{X_E}{X_L} = \frac{1}{3} \cdot \left(\frac{X_0}{X_1} - 1\right) = \frac{1}{3} \cdot \left(\frac{1.19\ \Omega/\text{km}}{0.42\ \Omega/\text{km}} - 1\right) = 0.61$$

The earth impedance (residual) compensation factor setting for the first zone Z1 may be different from that of the remaining zones of the distance protection. This allows the setting of the exact values for the protected line, while at the same time the setting for the back-up zones may be a close approximation even when the following lines have substantially different earth impedance ratios (e.g. cable after an overhead line). Accordingly, the settings for the address 1116 **RE/RL(Z1)** and 1117 **XE/XL(Z1)** are determined with the data of the protected line, while the addresses 1118 **RE/RL(> Z1)** and 1119 **XE/XL(> Z1)** apply to the remaining zones Z1B and Z2 up to Z6 (as seen from the relay location).

Note

When the addresses 1116 **RE/RL(Z1)** and 1118 **RE/RL(> Z1)** are set to about 2.0 or more, please keep in mind that the zone reach in R direction should not be set higher than the value determined previously (see Section 2.2.2.2/margin heading Resistance Tolerance). If this is not observed, it may happen that phase-to-earth impedance loops are measured in an incorrect distance zone, which may lead to loss of tripping coordination in the case of earth faults with fault resistances.

Earth Impedance (Residual) Compensation with Magnitude and Angle ($\underline{K}_0$–Factor)

When the complex earth impedance (residual) compensation factor $\underline{K}_0$ is set, the addresses 1120 to 1123 apply. In this case it is important that the line angle is set correctly (address 1105, see margin heading „General Line Data“) as the device needs the line angle to calculate the compensation components from the $\underline{K}_0$. These earth impedance compensation factors are defined with their magnitude and angle which may be calculated with the line data using the following equation:

$$\underline{K}_0 = \frac{\underline{Z}_E}{\underline{Z}_L} = \frac{1}{3} \cdot \left(\frac{\underline{Z}_0}{\underline{Z}_1} - 1\right)$$

Where

$\underline{Z}_0$	= (complex) zero sequence impedance of the line
$\underline{Z}_1$	= (complex) positive sequence impedance of the line

These values can be applied either to the entire line or as per unit of length values since the quotients are independent of length. Furthermore, it makes no difference whether the quotients are calculated with primary, or secondary values.

For overhead lines it is generally possible to calculate with scalar quantities as the angle of the zero sequence and positive sequence system only differ by an insignificant amount. With cables however, significant angle differences may exist as illustrated by the following example.

Calculation Example:

110 kV single-conductor oil-filled cable 3 · 185 mm² Cu with the following data

$\underline{Z}_1/s$ = $0.408 \cdot e^{j73^\circ}$ Ω/km positive sequence impedance

$\underline{Z}_0/s$ = $0.632 \cdot e^{j18.4^\circ}$ Ω/km zero sequence impedance

(where s = line length)

The calculation of the earth impedance (residual) compensation factor $\underline{K}_0$ results in:

$$\frac{Z_0}{Z_1} = \frac{0.632}{0.408} \cdot e^{j(18.4^\circ - 73^\circ)} = 1.55 \cdot e^{-j54.6^\circ} = 1.55 \cdot (0.579 - j0.815)$$
$$= 0.898 - j1.263$$

$$K_0 = \frac{1}{3} \cdot \left(\frac{Z_0}{Z_1} - 1\right) = \frac{1}{3} \cdot (0.898 - j1.263 - 1) = \frac{1}{3} \cdot (-0.102 - j1.263)$$

The magnitude of K_0 is therefore

$$K_0 = \frac{1}{3} \cdot \sqrt{(-0.102^2) + (-1.263^2)} = 0.42$$

When determining the angle, the quadrant of the result must be considered. The following table indicates the quadrant and range of the angle which is determined by the signs of the calculated real and imaginary part of $\underline{K}_0$.

Table 2-1 Quadrants and ranges of the angle K_0

Real part	Imaginary part	tan φ(K0)	Quadrant/range	Calculation
+	+	+	I 0° ... +90°	arc tan (|Im| / |Re|)
+	–	–	IV –90° ... 0°	–arc tan (|Im| / |Re|)
–	–	+	III –90° ... –180°	arc tan (|Im| / |Re|) –180°
–	+	–	II +90° ... +180°	–arc tan (|Im| / |Re|) +180°

In this example the following result is obtained:

$$\varphi(K_0) = \arctan\left(\frac{1.263}{0.102}\right) - 180^\circ = -94.6^\circ$$

The magnitude and angle of the earth impedance (residual) compensation factors setting for the first zone Z1 and the remaining zones of the distance protection may be different. This allows the setting of the exact values for the protected line, while at the same time the setting for the back-up zones may be a close approximation even when the following lines have substantially different earth impedance factors (e.g. cable after an overhead line). Accordingly, the settings for the address 1120 **`K0 (Z1)`** and 1121 **`Angle K0(Z1)`** are determined with the data of the protected line, while the addresses 1122 **`K0 (> Z1)`** and 1123 **`Angle K0(> Z1)`** apply to the remaining zones Z1B and Z2 up to Z6 (as seen from the relay location).

Note

If a combination of values is set which is not recognized by the device, it operates with preset values $\underline{K}_0 = 1 \cdot e^{0^\circ}$. The information „`Dis.ErrorK0(Z1)`“ (No. 3654) or „`DisErrorK0(>Z1)`“ (No. 3655) appears in the event logs.

Parallel line mutual impedance (optional)

If the device is applied to a double circuit line (parallel lines) and parallel line compensation for the distance and/or fault location function is used, the mutual coupling of the two lines must be considered. A prerequisite for this is that the earth (residual) current of the parallel line has been connected to the measuring input I_4 of the device and that this was configured with the power system data (Section 2.1.2.1) by setting the appropriate parameters.

The coupling factors may be determined using the following equations:

Resistance ratio:	Reactance ratio:
$\frac{R_M}{R_L} = \frac{1}{3} \cdot \frac{R_{0M}}{R_1}$	$\frac{X_M}{X_L} = \frac{1}{3} \cdot \frac{X_{0M}}{X_1}$

where

R_{0M} = Mutual zero sequence resistance (coupling resistance) of the line

X_{0M} = Mutual zero sequence reactance (coupling reactance) of the line

R_1 = Positive sequence resistance of the line

X_1 = Positive sequence reactance of the line

These values can be applied either to the entire double circuit line length or based on a per unit of line length, since the quotient is independent of length. Furthermore, it makes no difference whether the quotients are calculated with primary, or secondary values.

These setting values only apply to the protected line and are entered in the addresses 1126 **RM/RL ParalLine** and 1127 **XM/XL ParalLine**.

For earth faults on the protected feeder there is in theory no additional distance protection or fault locator measuring error when the parallel line compensation is used. The setting in address 1128 **RATIO Par. Comp** is therefore only relevant for earth faults outside the protected feeder. It provides the current ratio I_E/I_{EP} for the earth current balance of the distance protection (in Figure 2-3 for the device at location II), above which compensation should take place. In general, a presetting of 85 % is sufficient. A more sensitive (larger) setting has no advantage. Only in the case of a severe system asymmetry, or a very small coupling factor (X_M/X_L below approximately 0.4), may a smaller setting be useful. A more detailed explanation of parallel line compensation can be found in Section 2.2.1 under distance protection.

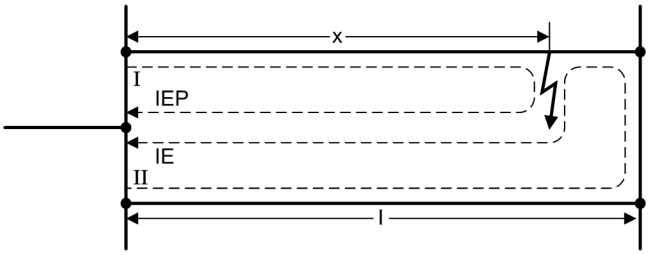

Figure 2-3 Distance with parallel line compensation at II

The current ratio may also be calculated from the desired distance of the parallel line compensation and vice versa. The following applies (refer to Figure 2-3):

$$\frac{I_E}{I_{EP}} = \frac{x/l}{2 - x/l} \quad \text{or} \quad \frac{X}{l} = \frac{2}{1 + \frac{1}{I_E/I_{EP}}}$$

Current transformer saturation

7SA522 contains a saturation detector which largely detects the measuring errors resulting from the saturation of the current transformers and initiates a change of the measurement method of the distance protection. The threshold above which the saturation detector picks up can be set in address 1140 **I-CTsat. Thres.**. This is the current level above which saturation may be present. The setting ∞ disables the saturation detector. This parameter can only be altered in DIGSI at **Display Additional Settings**. If current transformer saturation is expected, the following equation may be used as a thumb rule for this setting:

$$\text{Setting value I-CTsat. Thres.} = \frac{n'}{5} \cdot I_{nom}$$

$$\text{With } n' = n \cdot \frac{P_N + P_i}{P' + P_i} = \text{Actual Overcurrent Factor}$$

P_N = Nominal CT burden [VA]

P_i = Nominal CT internal burden [VA]

P' = Actual connected burden (protection device + connection cable)

Note

The parameter is only relevant for distance protection.

Circuit breaker status

Information regarding the circuit breaker position is required by various protection and supplementary functions to ensure their optimal functionality. The device has a circuit breaker status recognition which processes the status of the circuit breaker auxiliary contacts and contains also a detection based on the measured currents and voltages for opening and closing (see also Section 2.20.1).

In address 1130 the residual current **PoleOpenCurrent** is set, which will definitely not be exceeded when the circuit breaker pole is open. If parasitic currents (e.g. through induction) can be excluded when the circuit breaker is open, this setting may be very sensitive. Otherwise this setting must be increased. Usually the pre-setting is sufficient. This parameter can only be altered in DIGSI at **Display Additional Settings**.

The residual voltage **PoleOpenVoltage**, which will definitely not be exceeded when the circuit breaker pole is open, is set in address 1131. Voltage transformers must be on the line side. The setting should not be too sensitive because of possible parasitic voltages (e.g. due to capacitive coupling). It must in any event be set below the smallest phase-earth voltage which may be expected during normal operation. Usually the presetting is sufficient. This parameter can only be altered in DIGSI at **Display Additional Settings**.

The switch-on-to-fault activation (seal-in) time **SI Time all Cl.** (address 1132) determines the activation period of the protection functions enabled during each energization of the line (e.g. fast tripping high-current stage). This time is started by the internal circuit breaker switching detection when it recognizes energization of the line or by the circuit breaker auxiliary contacts, if these are connected to the device via binary input to provide information that the circuit breaker has closed. The time should therefore be set longer than the circuit breaker operating time during closing plus the operating time of this protection function plus the circuit breaker operating time during opening. This parameter can only be altered in DIGSI at **Display Additional Settings**.

In address 1134 **Line Closure** the criteria for the internal recognition of line energization are determined. ***Only with ManCl*** means that only the manual close signal via binary input or the integrated control is evaluated as closure. ***I OR U or ManCl*** means that additionally the measured currents or voltages are used to determine closure of the circuit breaker, whereas ***CB OR I or M/C*** implies that either the currents or the states of the circuit breaker auxiliary contacts are used to determine closure of the circuit breaker. If the voltage transformers are not situated on the line side, the setting ***CB OR I or M/C*** must be used. In the case of ***I or Man.Close*** only the currents or the manual close signal are used to recognize closing of the circuit breaker.

Before each line energization detection, the breaker must be recognized as open for the settable time1133 **T DELAY SOTF**.

Address 1135 **Reset Trip CMD** determines under which conditions a trip command is reset. If ***CurrentOpenPole*** is set, the trip command is reset as soon as the current disappears. It is important that the value set in address 1130 **PoleOpenCurrent** (see above) is undershot. If ***Current AND CB*** is set, the circuit breaker auxiliary contact must send a message that the circuit breaker is open. It is a prerequisite for this setting that the position of the auxiliary contacts is allocated via a binary input.

For special applications, in which the device trip command does not always lead to a complete cutoff of the current, the setting ***Pickup Reset*** can be chosen. In this case, the trip command is reset as soon as the pickup of the tripping protection function drops off and - just as with the other setting options- the minimum trip command duration (address 240) has elapsed. The setting ***Pickup Reset*** makes sense, for instance, during the test of the protection equipment, when the system-side load current cannot be cut off and the test current is injected in parallel to the load current.

While the time **SI Time all Cl.** (address 1132, refer above) is activated following each recognition of line energization, **SI Time Man.Cl** (address 1150) is the time following manual closure during which special influence of the protection functions is activated (e.g. increased reach of the distance protection). This parameter can only be altered in DIGSI at **Display Additional Settings**.

Note

For CB Test and automatic reclosure the CB auxiliary contact status derived with the binary inputs >CB1 ... (No. 366 to 371, 410 and 411) is relevant to indicate the CB switching status. The other binary inputs >CB ... (No. 351 to 353, 379 and 380) are used for detecting the status of the line (address 1134) and for reset of the trip command (address 1135). Address 1135 is also used by other protection functions, e.g. by the echo function, energization in case of overcurrent etc. For use with one circuit breaker only, both binary input functions, e.g. 366 and 351, can be allocated to the same physical input. For applications with 2 circuit breakers per feeder (1.5 circuit breaker systems or ring bus), the binary inputs >CB1... must be connected to the correct circuit breaker. The binary inputs >CB... then need the correct signals for detecting the line status. In certain cases, an additional CFC logic may be necessary.

Address 1136 **OpenPoleDetect.** defines the criteria for operating the internal open-pole detector (see also Section 2.20.1, Subsection Open-Pole Detector). When using the default setting ***w/ measurement***, all available data are evaluated that indicate single-pole dead time. The internal trip command and pickup indications, the current and voltage measured values and the CB auxiliary contacts are used. To evaluate only the auxiliary contacts including the phase currents, set the address 1136 to ***Current AND CB***. If you do not wish to detect single-pole dead time, set **OpenPoleDetect.** to ***OFF***.

For manual closure of the circuit breaker via binary inputs, it can be specified in address 1151 **MAN. CLOSE** whether the integrated manual CLOSE detection checks the synchronism between the busbar voltage and the voltage of the switched feeder. This setting does not apply for a close command via the integrated control functions. If the synchronism check is desired, the device must either feature the integrated synchronism check function or an external device for synchronism check must be connected.

If the internal synchronism check is to be used, the synchronism check function must be enabled; an additional voltage U_{sy2} for synchronism check has to be connected to the device and this must be correctly parameterised in the Power System Data (Section 2.1.2.1, address 210 **U4 transformer** = ***Usy2 transf.*** and the associated factors).

If no synchronism check is to be performed with manual closing, set **MAN. CLOSE** = ***w/o Sync-check***. If a check is desired, set ***with Sync-check***. To not use the MANUAL CLOSE function of the device, set **MAN. CLOSE** to ***NO***. This may be reasonable if the close command is output to the circuit breaker without involving the 7SA522, and the relay itself is not desired to issue a close command.

For commands via the integrated control (on site, DIGSI, serial interface) address 1152 **Man.Clos. Imp.** determines whether a close command via the integrated control regarding the MANUAL CLOSE handling for the protection functions (like instantaneous re-opening when switching onto a fault) is to act like a MANUAL CLOSE command via binary input. This address also informs the device to which switchgear this applies. You can select from the switching devices which are available to the integrated control. Select the circuit breaker which operates for manual closure and, if required, for automatic reclosure (usually Q0). If ***none*** is set here, a CLOSE command via the control will not generate a MANUAL CLOSE impulse for the protection function.

Three-pole coupling

Three-pole coupling is only relevant if single-pole auto-reclosures are carried out. If not, tripping is always three-pole. The remainder of this margin heading is then irrelevant.

Address 1155 **3pole coupling** determines whether any multi-phase pickup leads to a three-pole tripping command, or whether only multi-pole tripping decisions result in a three-pole tripping command. This setting is only relevant for versions with single-pole and three-pole tripping and is only available there. More information on this function is also contained in Section 2.20.1 Pickup Logic of the Entire Device.

With the setting ***with PICKUP*** every fault detection in more than one phase leads to three-pole coupling of the trip outputs, even if only a single-phase earth fault is situated within the tripping region, and further faults only affect the higher zones, or are located in the reverse direction. Even if a single-phase trip command has already been issued, each further fault detection will lead to three-pole coupling of the trip outputs.

If, on the other hand, this address is set to ***with TRIP***, three-pole coupling of the trip output (three-pole tripping) only occurs when more than one pole is tripped. Therefore, if a single-phase fault occurs within the trip zone and a further fault outside of it, single-pole tripping is possible. A further fault during the single-pole tripping will only lead to a three-pole coupling, if it occurs within the trip zone.

This parameter is valid for all protection functions of 7SA522 which are capable of single-pole tripping.

The difference made by this parameter becomes apparent when multiple faults are cleared, i.e. faults occurring almost simultaneously at different locations in the network.

If, for example, two single-phase earth faults occur on different lines — these may also be parallel lines — (Figure 2-4), the protection relays detect the fault type on all four line ends L1-L2-E, i.e. the pickup image corresponds to a two-phase earth fault. If single pole tripping and reclosure is employed, it is therefore desirable that each line only trips and recloses single pole. This is possible with setting 1155 **3pole coupling** = ***with TRIP***. Each of the four devices detects a single-pole internal fault and can thus trip single-pole.

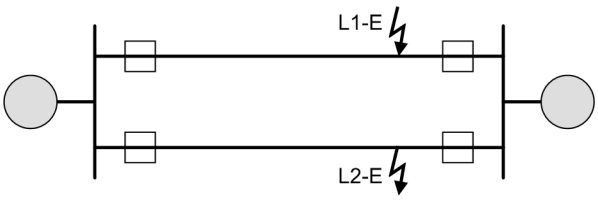

Figure 2-4 Multiple fault on a double-circuit line

In some cases, however, three-pole tripping would be preferable for this fault scenario, for example in the event that the double-circuit line is located in the vicinity of a large generator unit (Figure 2-5). This is because the generator considers the two single-phase ground faults as one double-phase ground fault, with correspondingly high dynamic load on the turbine shaft. With the setting 1155 **3pole coupling** = ***with PICKUP***, the two lines are switched off three-pole, since each device picks up as with L1-L2-E, i.e. as with a multi-phase fault.

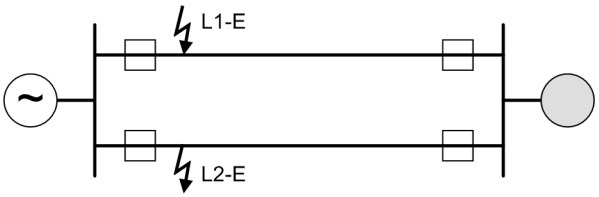

Figure 2-5 Multiple fault on a double-circuit line next to a generator

Address 1156 **Trip2phFlt** determines that the short-circuit protection functions perform only a single-pole trip in case of isolated two-phase faults (clear of ground), provided that single-pole tripping is possible and permitted. This allows a single-pole reclose cycle for this kind of fault. You can specify whether the leading phase (***1pole leading Ø***), or the lagging phase (***1pole lagging Ø***) is tripped. The parameter is only available in versions with single-pole and three-pole tripping. This parameter can only be altered using DIGSI at **Additional Settings**. If this possibility is to be used, you have to bear in mind that the phase selection should be the same throughout the entire network and that it must be the same at all ends of one line. More information on the functions is also contained in Section 2.20.1 Pickup Logic of the Entire Device. The presetting ***3pole*** is usually used.

2.1.4.2 Settings

Addresses which have an appended "A" can only be changed with DIGSI, under Additional Settings.

The table indicates region-specific presettings. Column C (configuration) indicates the corresponding secondary nominal current of the current transformer.

Addr.	Parameter	C	Setting Options	Default Setting	Comments
1103	FullScaleVolt.		1.0 .. 1200.0 kV	400.0 kV	Measurement: Full Scale Voltage (100%)
1104	FullScaleCurr.		10 .. 5000 A	1000 A	Measurement: Full Scale Current (100%)
1105	Line Angle		10 .. 89 °	85 °	Line Angle
1107	P,Q sign		not reversed reversed	not reversed	P,Q operational measured values sign
1110	x'	1A	0.0050 .. 9.5000 Ω/km	0.1500 Ω/km	x' - Line Reactance per length unit
		5A	0.0010 .. 1.9000 Ω/km	0.0300 Ω/km	
1111	Line Length		0.1 .. 1000.0 km	100.0 km	Line Length
1112	x'	1A	0.0050 .. 15.0000 Ω/mi	0.2420 Ω/mi	x' - Line Reactance per length unit
		5A	0.0010 .. 3.0000 Ω/mi	0.0484 Ω/mi	
1113	Line Length		0.1 .. 650.0 Miles	62.1 Miles	Line Length
1114	c'	1A	0.000 .. 100.000 µF/km	0.010 µF/km	c' - capacit. per unit line len. µF/km
		5A	0.000 .. 500.000 µF/km	0.050 µF/km	

Addr.	Parameter	C	Setting Options	Default Setting	Comments
1115	c'	1A	0.000 .. 160.000 µF/mi	0.016 µF/mi	c' - capacit. per unit line len. µF/mile
		5A	0.000 .. 800.000 µF/mi	0.080 µF/mi	
1116	RE/RL(Z1)		-0.33 .. 10.00	1.00	Zero seq. comp. factor RE/RL for Z1
1117	XE/XL(Z1)		-0.33 .. 10.00	1.00	Zero seq. comp. factor XE/XL for Z1
1118	RE/RL(> Z1)		-0.33 .. 10.00	1.00	Zero seq. comp.factor RE/RL(> Z1)
1119	XE/XL(> Z1)		-0.33 .. 10.00	1.00	Zero seq. comp.factor XE/XL(> Z1)
1120	K0 (Z1)		0.000 .. 4.000	1.000	Zero seq. comp. factor K0 for zone Z1
1121	Angle K0(Z1)		-180.00 .. 180.00 °	0.00 °	Zero seq. comp. angle for zone Z1
1122	K0 (> Z1)		0.000 .. 4.000	1.000	Zero seq.comp.factor K0,higher zones >Z1
1123	Angle K0(> Z1)		-180.00 .. 180.00 °	0.00 °	Zero seq. comp. angle, higher zones >Z1
1126	RM/RL ParalLine		0.00 .. 8.00	0.00	Mutual Parallel Line comp. ratio RM/RL
1127	XM/XL ParalLine		0.00 .. 8.00	0.00	Mutual Parallel Line comp. ratio XM/XL
1128	RATIO Par. Comp		50 .. 95 %	85 %	Neutral current RATIO Parallel Line Comp
1130A	PoleOpenCurrent	1A	0.05 .. 1.00 A	0.10 A	Pole Open Current Threshold
		5A	0.25 .. 5.00 A	0.50 A	
1131A	PoleOpenVoltage		2 .. 70 V	30 V	Pole Open Voltage Threshold
1132A	SI Time all Cl.		0.01 .. 30.00 sec	0.05 sec	Seal-in Time after ALL closures
1133A	T DELAY SOTF		0.05 .. 30.00 sec	0.25 sec	minimal time for line open before SOTF
1134	Line Closure		only with ManCl I OR U or ManCl CB OR I or M/C I or Man.Close	only with ManCl	Recognition of Line Closures with
1135	Reset Trip CMD		CurrentOpenPole Current AND CB Pickup Reset	CurrentOpenPole	RESET of Trip Command
1136	OpenPoleDetect.		OFF Current AND CB w/ measurement	w/ measurement	open pole detector
1140A	I-CTsat. Thres.	1A	0.2 .. 50.0 A; ∞	20.0 A	CT Saturation Threshold
		5A	1.0 .. 250.0 A; ∞	100.0 A	
1150A	SI Time Man.Cl		0.01 .. 30.00 sec	0.30 sec	Seal-in Time after MANUAL closures

Addr.	Parameter	C	Setting Options	Default Setting	Comments
1151	MAN. CLOSE		with Sync-check w/o Sync-check NO	NO	Manual CLOSE COMMAND generation
1152	Man.Clos. Imp.		(Setting options depend on configuration)	None	MANUAL Closure Impulse after CONTROL
1155	3pole coupling		with PICKUP with TRIP	with TRIP	3 pole coupling
1156A	Trip2phFlt		3pole 1pole leading Ø 1pole lagging Ø	3pole	Trip type with 2phase faults
1211	Distance Angle		30 .. 90 °	85 °	Angle of inclination, distance charact.

2.1.4.3 Information List

No.	Information	Type of Information	Comments
301	Pow.Sys.Flt.	OUT	Power System fault
302	Fault Event	OUT	Fault Event
303	E/F Det.	OUT	E/Flt.det. in isol/comp.netw.
351	>CB Aux. L1	SP	>Circuit breaker aux. contact: Pole L1
352	>CB Aux. L2	SP	>Circuit breaker aux. contact: Pole L2
353	>CB Aux. L3	SP	>Circuit breaker aux. contact: Pole L3
356	>Manual Close	SP	>Manual close signal
357	>Blk Man. Close	SP	>Block manual close cmd. from external
361	>FAIL:Feeder VT	SP	>Failure: Feeder VT (MCB tripped)
362	>FAIL:U4 VT	SP	>Failure: Usy4 VT (MCB tripped)
366	>CB1 Pole L1	SP	>CB1 Pole L1 (for AR,CB-Test)
367	>CB1 Pole L2	SP	>CB1 Pole L2 (for AR,CB-Test)
368	>CB1 Pole L3	SP	>CB1 Pole L3 (for AR,CB-Test)
371	>CB1 Ready	SP	>CB1 READY (for AR,CB-Test)
378	>CB faulty	SP	>CB faulty
379	>CB 3p Closed	SP	>CB aux. contact 3pole Closed
380	>CB 3p Open	SP	>CB aux. contact 3pole Open
381	>1p Trip Perm	SP	>Single-phase trip permitted from ext.AR
382	>Only 1ph AR	SP	>External AR programmed for 1phase only
383	>Enable ARzones	SP	>Enable all AR Zones / Stages
385	>Lockout SET	SP	>Lockout SET
386	>Lockout RESET	SP	>Lockout RESET
410	>CB1 3p Closed	SP	>CB1 aux. 3p Closed (for AR, CB-Test)
411	>CB1 3p Open	SP	>CB1 aux. 3p Open (for AR, CB-Test)
501	Relay PICKUP	OUT	Relay PICKUP
503	Relay PICKUP L1	OUT	Relay PICKUP Phase L1
504	Relay PICKUP L2	OUT	Relay PICKUP Phase L2
505	Relay PICKUP L3	OUT	Relay PICKUP Phase L3
506	Relay PICKUP E	OUT	Relay PICKUP Earth

No.	Information	Type of Information	Comments
507	Relay TRIP L1	OUT	Relay TRIP command Phase L1
508	Relay TRIP L2	OUT	Relay TRIP command Phase L2
509	Relay TRIP L3	OUT	Relay TRIP command Phase L3
510	Relay CLOSE	OUT	Relay GENERAL CLOSE command
511	Relay TRIP	OUT	Relay GENERAL TRIP command
512	Relay TRIP 1pL1	OUT	Relay TRIP command - Only Phase L1
513	Relay TRIP 1pL2	OUT	Relay TRIP command - Only Phase L2
514	Relay TRIP 1pL3	OUT	Relay TRIP command - Only Phase L3
515	Relay TRIP 3ph.	OUT	Relay TRIP command Phases L123
530	LOCKOUT	IntSP	LOCKOUT is active
533	IL1 =	VI	Primary fault current IL1
534	IL2 =	VI	Primary fault current IL2
535	IL3 =	VI	Primary fault current IL3
536	Definitive TRIP	OUT	Relay Definitive TRIP
545	PU Time	VI	Time from Pickup to drop out
546	TRIP Time	VI	Time from Pickup to TRIP
560	Trip Coupled 3p	OUT	Single-phase trip was coupled 3phase
561	Man.Clos.Detect	OUT	Manual close signal detected
562	Man.Close Cmd	OUT	CB CLOSE command for manual closing
563	CB Alarm Supp	OUT	CB alarm suppressed
590	Line closure	OUT	Line closure detected
591	1pole open L1	OUT	Single pole open detected in L1
592	1pole open L2	OUT	Single pole open detected in L2
593	1pole open L3	OUT	Single pole open detected in L3

2.2 Distance Protection

Distance protection is the main function of the device. It is characterized by high measuring accuracy and the ability to adapt to the given system conditions. It is supplemented by a number of additional functions.

2.2.1 Distance protection, general settings

2.2.1.1 Earth Fault Detection

Functional Description

Recognition of an earth fault is an important element in identifying the type of fault, as the determination of the valid loops for measurement of the fault distance and the shape of the distance zone characteristics substantially depend on whether the fault at hand is an earth fault or not. The 7SA522 has a stabilized earth current measurement, a zero sequence current/negative sequence current comparison as well as a displacement voltage measurement.

Furthermore, special measures are taken to avoid a pickup for single earth faults in an isolated or resonant-earthed system.

Earth Current $3I_0$

For earth current measurement, the fundamental component of the sum of the numerically filtered phase currents is supervised to detect if it exceeds the set value (parameter **`3IO> Threshold`**). It is stabilized against spurious operation resulting from unsymmetrical operating currents and error currents in the secondary circuits of the current transformer due to different degrees of current transformer saturation during short-circuits without earth: the actual pick-up threshold automatically increases as the phase current increases (Figure 2-6). The dropout threshold is approximately 95 % of the pickup threshold.

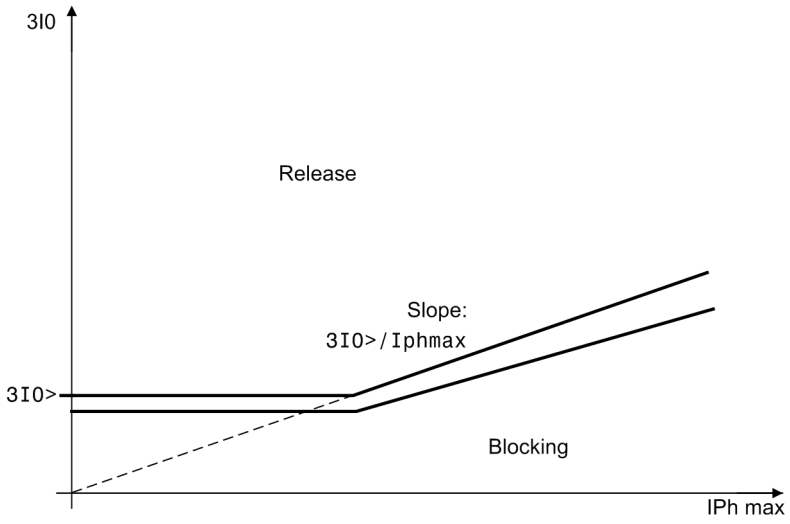

Figure 2-6 Earth current stage: pickup characteristic

Negative Sequence Current $3I_2>$

On long, heavily loaded lines, large currents could cause excessive restraint of the earth current measurement (ref. Figure 2-6). To ensure secure detection of earth faults in this case, a negative sequence comparison stage is additionally provided. In the event of a single-phase fault, the negative sequence current I_2 has approximately the same magnitude as the zero sequence current I_0. When the ratio zero sequence current / negative sequence current exceeds a preset ratio, this stage picks up. For this stage a parabolic characteristic provides restraint in the event of large negative sequence currents. Figure 2-7 illustrates this relationship. A release by means of the negative sequence current comparison stage requires currents of at least $0.2 \cdot I_N$ for $3I_0$ and $3I_2$.

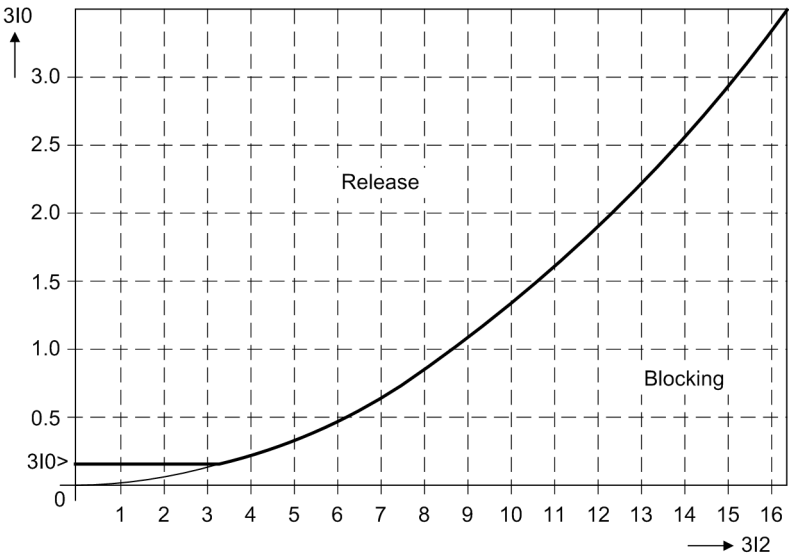

Figure 2-7 Characteristic of the I_0/I_2 stage

Displacement Voltage $3U_0$

For the neutral displacement voltage recognition the displacement voltage ($3 \cdot U_0$) is numerically filtered and the fundamental frequency is monitored to recognize whether it exceeds the set threshold. The dropout threshold is approximately 95 % of the pickup threshold. In earthed systems (**`3U0> Threshold`**) it can be used as an additional criterion for earth faults. For earthed systems, the U_0–criterion may be disabled by applying the ∞ setting.

Logical Combination for Earthed Systems

The current and voltage criteria supplement each other, as the displacement voltage increases when the zero sequence to positive sequence impedance ratio is large, whereas the earth current increases when the zero sequence to positive sequence impedance ratio is smaller. Therefore, the current and voltage criteria for earthed systems are normally ORed. However, the two criteria may also be ANDed (settable, see Figure 2-8). Setting **`3U0> Threshold`** to infinite makes this criterion ineffective.

If the device detects a current transformer saturation in any phase current, the voltage criterion is indeed crucial to the detection of an earth fault since irregular current transformer saturation can cause a faulty secondary zero-sequence current although no primary zero-sequence current is present.

If displacement voltage detection has been made ineffective by setting **`3U0> Threshold`** to infinite, earth fault detection with the current criterion is possible even if the current transformers are saturated.

The earth fault detection alone does not cause a general fault detection of the distance protection, but merely controls the further fault detection modules. It is only alarmed in case of a general fault detection.

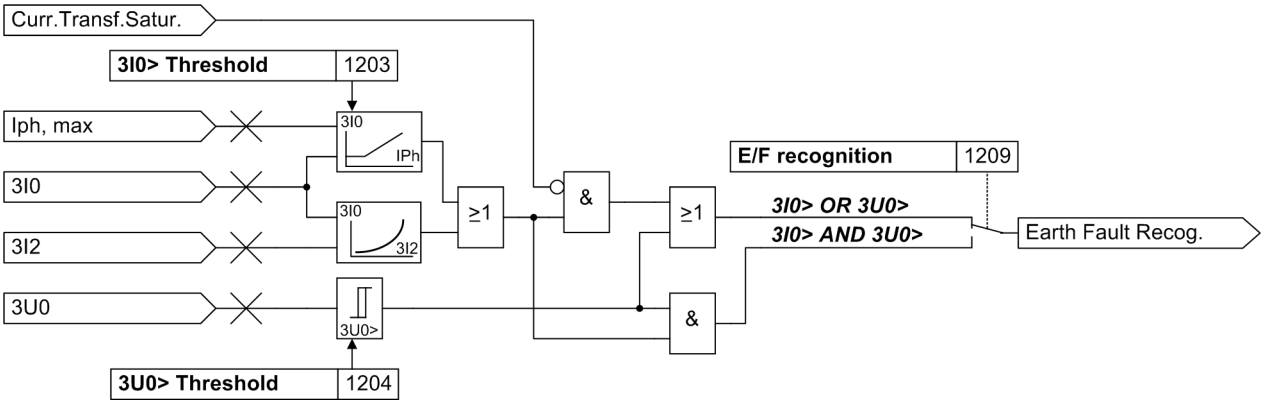

Figure 2-8 Earth fault detection logic for earthed systems

Earth fault detection during single-pole open condition

In order to prevent undesired pickup of the earth fault detection caused by load currents during single-pole open condition, a modified earth fault detection is used during single-pole open condition in earthed power systems (Figure 2-9). In this case, the magnitudes of the currents and voltages are monitored in addition to the angles between the currents.

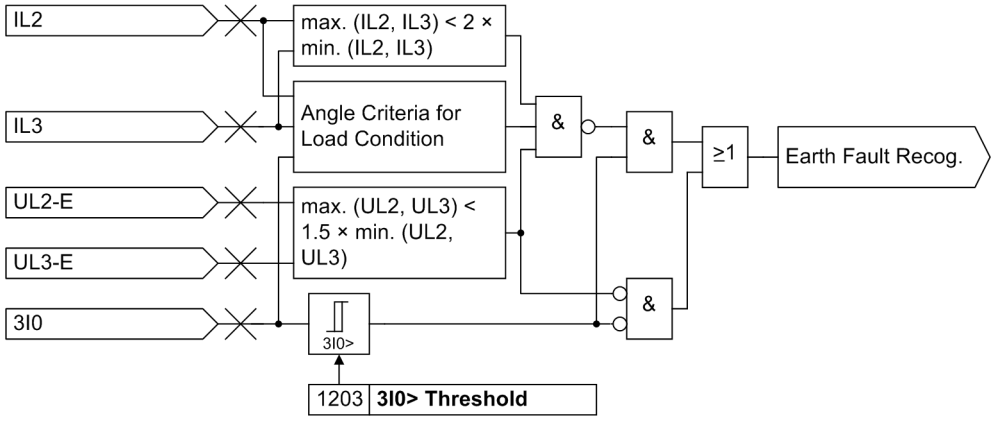

Figure 2-9 Earth fault detection during single-pole open condition (example: single-pole dead time L1)

Logical Combination for Non-earthed Systems

In compensated or isolated networks, an earth pickup is only initiated after a pickup of the zero-sequence current criterion. It should be considered that the zero-sequence voltage criterion with the parameter 1205 **3U0> COMP/ISOL.** is used for the confirmation of an earth pickup in case of double earth faults with current transformer saturation.

The 3I0 threshold is reduced in case of asymmetrical phase-to-phase voltages in order to allow earth pickup even in the case of double earth faults with very low zero sequence current. The zero-sequence voltage criterion is not used solely as the distance measurement for phase-to-earth loops tends to overreach if the earth current is missing. If the current transformer is saturated and the parameter 1205 is not set to ∞, an earth fault detection by means of the I0 criterion alone is not possible and a verification of the pickup by means of the U0 criterion is initiated.

The maximum asymmetry to be expected for a load current or a single earth fault can be set via parameter 1223 **Uph-ph unbal.**. Furthermore, in these systems a simple earth fault is assumed initially and the fault detection is suppressed in order to avoid erroneous pickup as a result of the earth fault inception transients.

After a configurable delay time **T3I0 1PHAS** the fault detection is released again; this is necessary for the distance protection to still be able to detect a double earth fault with one base point on a dead-end feeder. If the phase-to-phase voltages are asymmetrical, this indicates a double earth fault and the pickup is released immediately.

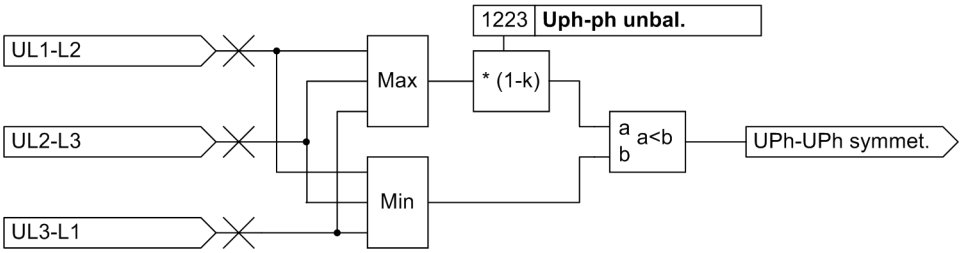

Figure 2-10 Symmetry detection for phase-to-phase voltages

k = Setting value for parameter 1223

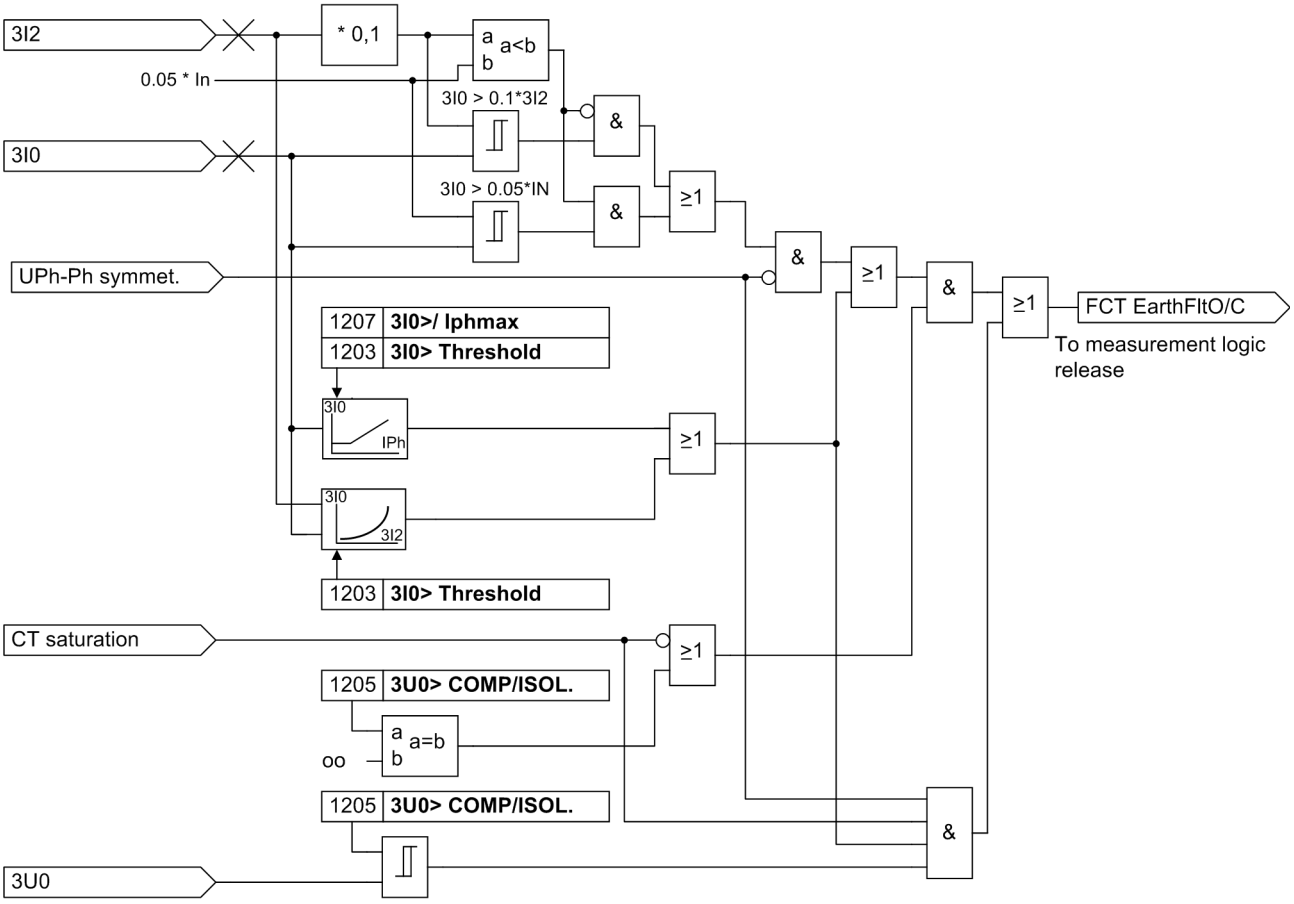

Figure 2-11 Earth fault detection in isolated or resonant-earthed systems

2.2.1.2 Calculation of the Impedances

A separate measuring system is provided for each of the six possible impedance loops L1-E, L2-E, L3-E, L1-L2, L2-L3, L3-L1. The phase-to-earth loops are evaluated when an earth fault detection is recognized and the phase current exceeds a settable minimum value `Minimum Iph>`. The phase-to-phase loops are evaluated when the phase current in both of the affected phases exceeds the minimum value `Minimum Iph>`.

A jump detector synchronizes all the calculations with the fault inception. If a further fault occurs during the evaluation, the new measured values are immediately used for the calculation. The fault evaluation is therefore always done with the measured values of the current fault condition.

Phase-to-Phase Loops

To calculate the phase-to-phase loop, for instance during a two-phase short circuit L1-L2 (Figure 2-12), the loop equation is:

$$\underline{I}_{L1} \cdot \underline{Z}_L - \underline{I}_{L2} \cdot \underline{Z}_L = \underline{U}_{L1\text{-}E} - \underline{U}_{L2\text{-}E}$$

with

$\underline{U}, \underline{I}$	the (complex) measured quantities and
$\underline{Z} = R + jX$	the (complex) line impedance.

The line impedance is computed to be

$$Z_L = \frac{U_{L1\text{-}E} - U_{L2\text{-}E}}{I_{L1} - I_{L2}}$$

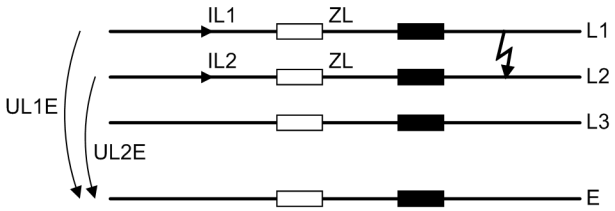

Figure 2-12 Two-phase fault clear of earth, fault loop

The calculation of the phase-to-phase loops does not take place as long as one of the concerned phases is switched off (during single-pole dead time) to avoid an incorrect measurement with the undefined measured values existing during this state. A state recognition (refer to Section 2.20.1) provides the corresponding blocking signal. A logic block diagram of the phase-to-phase measuring system is shown in Figure 2-13.

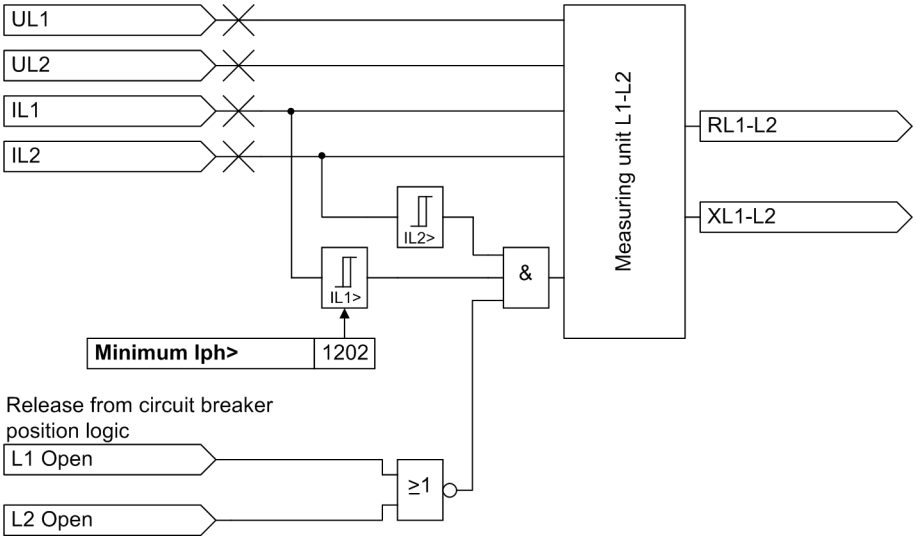

Figure 2-13 Logic for a phase–phase measuring unit, shown by the example of the L1-L2 loop

Phase-to-Earth Loops

For the calculation of the phase-to-earth loop, for example during an L3-E short-circuit (Figure 2-14) it must be noted that the impedance of the earth return path does not correspond to the impedance of the phase.

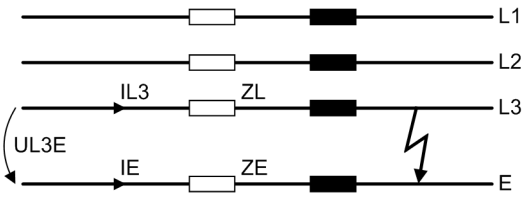

Figure 2-14 Single-phase earth fault, fault loop

In the faulted loop

$$\underline{U}_{L3\text{-}E} = \underline{I}_{L3} \cdot (R_L - jX_L) - \underline{I}_E \cdot \left(\frac{R_E}{R_L} \cdot R_L + j\left(\frac{X_E}{X_L}\right) \cdot X_L\right)$$

the voltage $\underline{U}_{L3\text{-}E}$, the phase current $\underline{I}_{L3}$ and the earth current $\underline{I}_E$ are measured. The impedance to the fault location results from:

$$R_{L3\text{-}E} = \frac{U_{L3\text{-}E}}{I_{L3}} \cdot \frac{\cos(\varphi_U - \varphi_L) - \frac{I_E}{I_{L3}} \cdot \frac{X_E}{X_L} \cdot \cos(\varphi_U - \varphi_E)}{1 - \left(\frac{X_E}{X_L} + \frac{R_E}{R_L}\right) \cdot \frac{I_E}{I_{L3}} \cdot \cos(\varphi_E - \varphi_L) + \frac{R_E}{R_L} \cdot \frac{X_E}{X_L} \cdot \left(\frac{I_E}{I_{L3}}\right)^2}$$

and

$$X_{L3\text{-}E} = \frac{U_{L3\text{-}E}}{I_{L3}} \cdot \frac{\sin(\varphi_U - \varphi_L) - \frac{I_E}{I_{L3}} \cdot \frac{R_E}{R_L} \cdot \sin(\varphi_U - \varphi_E)}{1 - \left(\frac{X_E}{X_L} + \frac{R_E}{R_L}\right) \cdot \frac{I_E}{I_{L3}} \cdot \cos(\varphi_E - \varphi_L) + \frac{R_E}{R_L} \cdot \frac{X_E}{X_L} \cdot \left(\frac{I_E}{I_{L3}}\right)^2}$$

with

$U_{L3\text{-}E}$ = r.m.s.value of the short-circuit voltage

I_{L3} = r.m.s. value of the phase short-circuit current

I_E = r.m.s. value of the earth short-circuit current

φ_U = phase angle of the short-circuit voltage

φ_L = phase angle of the phase short-circuit current

φ_E = phase angle of the earth short-circuit current

The factors R_E/R_L and X_E/X_L are dependent only on the line constants, and no longer on the distance to fault.

The calculation of the phase-to-earth loops does not take place as long as the concerned phase is switched off (during single-pole dead time) to avoid an incorrect measurement with the now undefined measured values. A state recognition provides the corresponding blocking signal. A logic block diagram of the phase-to-earth measuring system is shown in Figure 2-15.

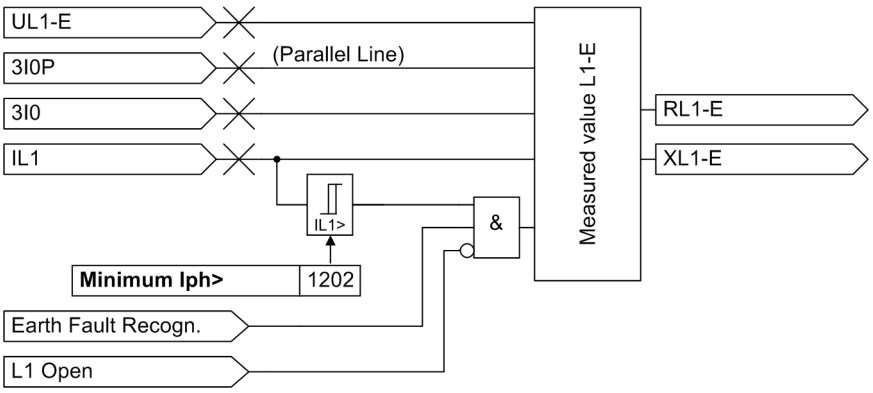

Figure 2-15 Logic of the phase-earth measuring system

Unfaulted Loops

The above considerations apply to the relevant short-circuited loop. All six loops are calculated for the impedance pickup; the impedances of the unfaulted loops are also influenced by the short-circuit currents and voltages in the short-circuited phases. During an L1-E fault for example, the short-circuit current in phase L1 also appears in the measuring loops L1-L2 and L3-L1. The earth current is also measured in loops L2-E and L3-E. Combined with load currents which may flow, the unfaulted loops produce the so called „apparent impedances“ which have nothing to do with the actual fault distance.

These „apparent impedances“ in the unfaulted loops are usually larger than the short-circuit impedance of the faulted loop because the unfaulted loop only carries a part of the fault current and always has a larger voltage than the faulted loop. For the selectivity of the zones, they are usually of no consequence.

Apart from the **zone selectivity**, the **phase selectivity** is also important to achieve a correct identification of the faulted phases, to alarm the faulted phases and especially to enable single-pole automatic reclosure. Depending on the infeed conditions, close-in short-circuits may cause unfaulted loops to „see“ the fault further away than the faulted loop, but still within the tripping zone. This would cause three-pole tripping and therefore void the possibility of single-pole automatic reclosure. As a result power transfer via the line would be lost.

In the 7SA522 this is avoided by the implementation of a „loop verification“ function which operates in two steps:

Initially, the calculated loop impedance and its components (phase or earth) are used to simulate a replica of the line impedance. If this simulation returns a plausible line image, the corresponding loop pick-up is designated as a definitely valid loop.

If the impedances of more than one loop are now located within the range of the zone, the smallest is still declared to be a valid loop. Furthermore, all loops with an impedance that does not exceed the smallest loop impedance by more than 50 % are declared as being valid. Loops with larger impedance are eliminated. Those loops which were declared valid in the initial stage cannot be eliminated by this stage, even if they have larger impedances.

In this manner unfaulted „apparent impedances“ are eliminated on the one hand, while on the other hand, unsymmetrical multi-phase faults and multiple short-circuits are recognized correctly.

The loops that were designated as being valid are converted to phase information so that the fault detection correctly alarms the faulted phases.

Double Faults in Earthed Systems

In systems with an effectively or low-resistant earthed starpoint, each connection of a phase with earth results in a short-circuit condition which must be isolated immediately by the closest protection systems. Fault detection occurs in the faulted loop associated with the faulted phase.

With double earth faults, fault detection is generally in two phase-to-earth loops. If both earth loops are in the same direction, a phase-to-phase loop may also pick up. It is possible to restrict the fault detection to particular loops in this case. It is often desirable to block the phase-to-earth loop of the leading phase, as this loop tends to overreach when there is infeed from both ends to a fault with a common earth fault resistance (Parameter 1221 **2Ph-E faults** = ***Block leading Ø***). Alternatively, it is also possible to block the lagging phase-to-earth loop (Parameter **2Ph-E faults** = ***Block lagging Ø***). All the affected loops can also be evaluated (Parameter **2Ph-E faults** = ***All loops***), or only the phase-to-phase loop (Parameter **2Ph-E faults** = ***Ø-Ø loops only***) or only the phase-to-earth loops (Parameter **2Ph-E faults** = ***Ø-E loops only***). All these restrictions presuppose that the affected loops have the same direction.

In Table 2-2 the measured values used for the distance measurement in earthed systems during double earth faults are shown.

Table 2-2 Evaluation of the measured loops for double earth faults in an earthed system in case both earth faults are close to each other

Loop pickup	Evaluated loop(s)	Setting of parameter 1221
L1-E, L2-E, L1-L2 L2-E, L3-E, L2-L3 L1-E, L3-E, L3-L1	L2-E, L1-L2 L3-E, L2-L3 L1-E, L3-L1	2Ph-E faults = Block leading Ø
L1-E, L2-E, L1-L2 L2-E, L3-E, L2-L3 L1-E, L3-E, L3-L1	L1-E, L1-L2 L2-E, L2-L3 L3-E, L3-L1	2Ph-E faults = Block lagging Ø
L1-E, L2-E, L1-L2 L2-E, L3-E, L2-L3 L1-E, L3-E, L3-L1	L1-E, L2-E, L1-L2 L2-E, L3-E, L2-L3 L1-E, L3-E, L3-L1	2Ph-E faults = All loops
L1-E, L2-E, L1-L2 L2-E, L3-E, L2-L3 L1-E, L3-E, L3-L1	L1-L2 L2-L3 L3-L1	2Ph-E faults = Ø-Ø loops only
L1-E, L2-E, L1-L2 L2-E, L3-E, L2-L3 L1-E, L3-E, L3-L1	L1-E, L2-E L2-E, L3-E L1-E, L3-E	2Ph-E faults = Ø-E loops only

During three-phase faults, usually all three phase-to-phase loops pick up In this case the three phase-to-phase loops are evaluated. If earth fault detection also occurs, the phase-to-earth loops are also evaluated.

Double earth faults in non-earthed systems

In isolated or resonant-earthed networks a single-phase earth fault does not result in a short circuit current flow. There is only a displacement of the voltage triangle (Figure 2-16). For the system operation this state is no immediate danger. The distance protection must not pick up in this case even though the voltage of the phase with the earth fault is equal to zero in the whole galvanically connected system. Any load currents will result in an impedance value that is equal to zero. Accordingly, a single-phase pickup phase-to-earth is prevented without earth current pickup in the 7SA522.

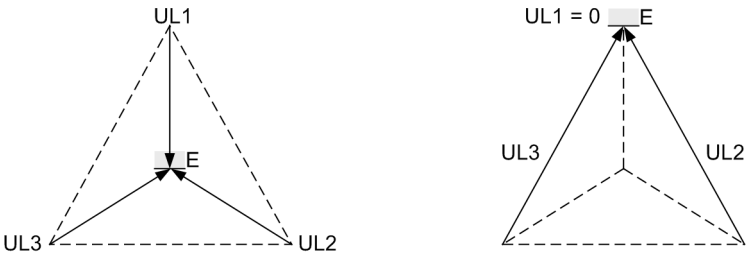

a) Healthy System, without Earth Fault b) Earth Fault in Phase L1

Figure 2-16 Earth fault in non-earthed neutral system

With the occurrence of earth faults — especially in large resonant-earthed systems — large fault inception transient currents can appear that may evoke the earth current pickup. In case of an overcurrent pick-up there may also be a phase current pickup. The 7SA522 features special measures against such spurious pickups.

With the occurrence of a double earth fault in isolated or resonant-earthed systems it is sufficient to switch off one of the faults. The second fault may remain in the system as a simple earth fault. Which of the faults is switched off depends on the double earth fault preference which is set the same in the whole galvanically-connected system. With 7SA522 the following double earth fault preferences (Parameter 1220 **PHASE PREF.2phe**) can be selected:

Acyclic L3 before L1 before L2	L3 (L1) ACYCLIC
Acyclic L1 before L3 before L2	L1 (L3) ACYCLIC
Acyclic L2 before L1 before L3	L2 (L1) ACYCLIC
Acyclic L1 before L2 before L3	L1 (L2) ACYCLIC
Acyclic L3 before L2 before L1	L3 (L2) ACYCLIC
Acyclic L2 before L3 before L1	L2 (L3) ACYCLIC
Cyclic L3 before L1 before L2 before L3	L3 (L1) CYCLIC
Cyclic L1 before L3 before L2 before L1	L1 (L3) CYCLIC
All loops are measured	All loops

In all eight preference options, one earth fault is switched off according to the preference scheme. The second fault can remain in the system as a simple earth fault. It can be detected with the Earth Fault Detection in Non-earthed Systems (optional).

The 7SA522 also enables the user to switch off both fault locations of a double earth fault. Set the double earth fault preference to ***All loops***.

Table 2-3 lists all measured values used for the distance measuring in isolated or resonant-earthed systems.

Table 2-3 Evaluation of the Measuring Loops for Multi-phase Pickup in the Non-earthed Network

Loop pickup	Evaluated loop(s)	Setting of parameter 1220
L1-E, L2-E, (L1-L2) L2-E, L3-E, (L2-L3) L1-E, L3-E, (L3-L1)	L1-E L3-E L3-E	PHASE PREF.2phe = L3 (L1) ACYCLIC
L1-E, L2-E, (L1-L2) L2-E, L3-E, (L2-L3) L1-E, L3-E, (L3-L1)	L1-E L3-E L1-E	PHASE PREF.2phe = L1 (L3) ACYCLIC
L1-E, L2-E, (L1-L2) L2-E, L3-E, (L2-L3) L1-E, L3-E, (L3-L1)	L2-E L2-E L1-E	PHASE PREF.2phe = L2 (L1) ACYCLIC
L1-E, L2-E, (L1-L2) L2-E, L3-E, (L2-L3) L1-E, L3-E, (L3-L1)	L1-E L2-E L1-E	PHASE PREF.2phe = L1 (L2) ACYCLIC
L1-E, L2-E, (L1-L2) L2-E, L3-E, (L2-L3) L1-E, L3-E, (L3-L1)	L2-E L3-E L3-E	PHASE PREF.2phe = L3 (L2) ACYCLIC
L1-E, L2-E, (L1-L2) L2-E, L3-E, (L2-L3) L1-E, L3-E, (L3-L1)	L2-E L2-E L3-E	PHASE PREF.2phe = L2 (L3) ACYCLIC
L1-E, L2-E, (L1-L2) L2-E, L3-E, (L2-L3) L1-E, L3-E, (L3-L1)	L1-E L2-E L3-E	PHASE PREF.2phe = L3 (L1) CYCLIC
L1-E, L2-E, (L1-L2) L2-E, L3-E, (L2-L3) L1-E, L3-E, (L3-L1)	L2-E L3-E L1-E	PHASE PREF.2phe = L1 (L3) CYCLIC
L1-E, L2-E, (L1-L2) L2-E, L3-E, (L2-L3) L1-E, L3-E, (L3-L1)	L1-E, L2-E L2-E, L3-E L3-E; L1-E	PHASE PREF.2phe = All loops

Parallel line measured value correction (optional)

During earth faults on parallel lines, the impedance values calculated by means of the loop equations are influenced by the coupling of the earth impedance of the two conductor systems (Figure 2-17). This causes measuring errors in the result of the impedance computation unless special measures are taken. A parallel line compensation may therefore be activated. In this manner the earth current of the parallel line is taken into consideration by the line equation and thereby allows for compensation of the coupling influence. The earth current of the parallel line must be connected to the device for this purpose. The loop equation is then as shown below, refer also to Figure 2-14.

$$\underline{I}_{L3} \cdot \underline{Z}_L - \underline{I}_E \cdot \underline{Z}_E - \underline{I}_{EP} \cdot (\underline{Z}_{0M}/3) = \underline{U}_{L3\text{-}E}$$

$$I_{L3} \cdot (R_L + jX_L) - \underline{I}_E \cdot \left(\frac{R_E}{R_L} \cdot R_L + j\left(\frac{X_E}{X_L}\right) \cdot X_L\right) - \underline{I}_{EP} \cdot \left(\frac{R_{0M}}{3R_L} \cdot R_L + j\left(\frac{X_{0M}}{3X_L}\right) \cdot X_L\right) = \underline{U}_{L3\text{-}E}$$

where $\underline{I}_{EP}$ is the earth current of the parallel line and the ratios $R_{0M}/3R_L$ und $X_{0M}/3X_L$ are constant line parameters, resulting from the geometry of the double circuit line and the nature of the ground below the line. These line parameters are input to the device — along with all the other line data — during the parameterisation.

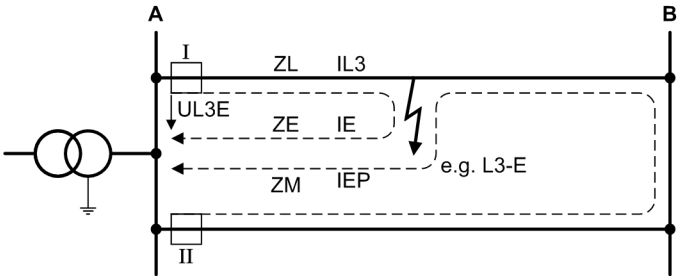

Figure 2-17 Earth fault on a double circuit line

Without parallel line compensation, the earth current on the parallel line will in most cases cause the reach threshold of the distance protection to be shortened (underreach of the distance measurement). In some cases — for example when the two feeders are terminated to different busbars, and the location of the earth fault is on one of the remote busbars (at B in Figure 2-17) — an overreach may occur.

The parallel line compensation only applies to faults on the protected feeder. For faults on the parallel line, the compensation may not be carried out, as this would cause severe overreach. The relay located in position II in Figure 2-17 must therefore not be compensated.

Earth current balance is therefore additionally provided in the device, which carries out a cross comparison of the earth currents in the two lines. The compensation is only applied to the line end where the earth current of the parallel line is not substantially larger than the earth current in the line itself. In example in Figure 2-17, the current I_E is larger than I_{EP}: compensation is applied at I by including $\underline{Z}_M \cdot \underline{I}_{EP}$ in the evaluation; at II compensation is not applied.

Switching onto a fault

If the circuit breaker is manually closed onto a short circuit, the distance protection can issue an instantaneous trip command. By setting parameters it may be determined which zone(s) is/are released following a manual close (refer to Figure 2-18). The line energization information (input „SOTF“) is derived from the state recognition (see Section 2.20.1, Detection of the Circuit Breaker Position).

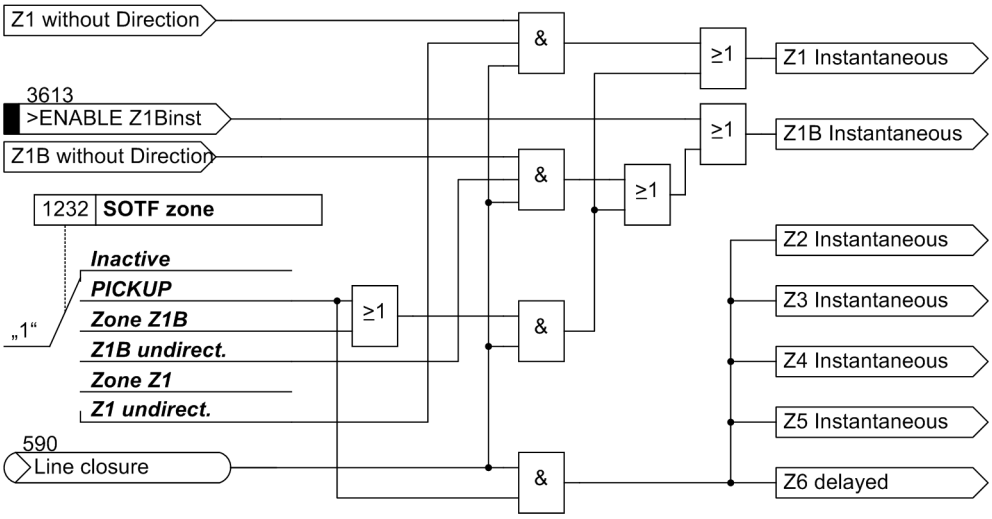

Figure 2-18 Circuit breaker closure onto a fault

Note

When switching onto a three-pole fault with the MHO characteristic, there will be no voltage in the memory or unfaulted loop voltage available. To ensure fault clearance when switching onto three-phase close-up faults, please make sure that in conjunction with the configured MHO characteristic the instantaneous tripping function is always enabled.

2.2.1.3 Setting Notes

At address 1201 `FCT Distance` the distance protection function can be switched *ON* or *OFF*.

Minimum Current

The minimum current for fault detection **`Minimum Iph>`** (address 1202) is set somewhat (approx. 10 %) below the minimum short-circuit current that may occur.

Earth fault detection

In systems with earthed starpoint, the setting **`3I0> Threshold`** (address 1203) is set somewhat below the minimum expected earth fault current. $3I_0$ is defined as the sum of the phase currents $|\underline{I}_{L1} + \underline{I}_{L2} + \underline{I}_{L3}|$, which equals the starpoint current of the set of current transformers. In non-earthed systems the setting value is recommended to be below the earth current value for double earth faults.

The preset value **`3I0>/ Iphmax`** = 0.10 (address 1207) is usually recommended for the slope of the 3I0 characteristic. This setting can only be changed in DIGSI at **Display Additional Settings**.

Addresses 1204 and 1209 are only relevant for **earthed** power systems. In non-earthed systems, they are hidden.

When setting **`3U0> Threshold`** (address 1204), care must be taken that operational asymmetries do not cause a pickup. 3U0 is defined as the sum of the phase-earth voltages $|\underline{U}_{L1-E} + \underline{U}_{L2-E} + \underline{U}_{L3-E}|$. If the U_0 criterion is not required, the address 1204 is set to ∞.

In earthed power systems the earth fault detection can be complemented by a zero sequence voltage detection function. You can determine whether an earth fault is detected when a zero sequence current or a zero sequence voltage threshold is exceeded or when both criteria are met. ***3I0> OR 3U0>*** (default setting) applies at address 1209 **E/F recognition** if only one of the two criteria is valid. Select ***3I0> AND 3U0>*** to activate both criteria for earth-fault detection. This setting can only be changed in DIGSI at **Display Additional Settings**. If you want to detect only the earth current, set ***3I0> OR 3U0>*** and also **3U0> Threshold** (address 1204) to ∞.

Note

Do under no circumstances set address 1204 **3U0> Threshold** to ∞ if you have set address 1209 **E/F recognition** = ***3I0> AND 3U0>***, since earth fault detection will then not be possible any longer.

In compensated or isolated networks, an earth pickup is only initiated after the pickup of the zero-sequence current criterion. Use the zero-sequence voltage criterion with the parameter 1205 **3U0> COMP/ISOL.** for the confirmation of an earth pickup in case of double earth faults with current transformer saturation.

If the current transformer is saturated and the parameter 1205 is not set to ∞, an earth fault detection by means of the I0 criterion alone is not possible and a verification of the pickup by means of the U0 criterion is initiated.

Address 1223 **Uph-ph unbal.** allows you to specify how great the asymmetries can become due to load and single-pole earth fault conditions.

If the earth fault detection by the I0 criterion threatens to pick up due to fault inception transients following the occurrence of a single earth fault, the detection can be delayed by means of a parameter **T3IO 1PHAS** (address 1206).

Application with series-compensated lines

In applications for, or in the proximity of, series-compensated lines (lines with series capacitors) address 1208 **SER-COMP.** is set to ***YES***, to ensure that the direction determination operates correctly in all cases. The influence of the series capacitors on the direction determination is described in Section 2.2.2 under margin heading „Direction Determination in Case of Series-compensated Lines“.

Start of Delay Times

As was mentioned in the description of the measuring methods, each distance zone generates an output signal which is associated with the zone and the affected phase. The zone logic combines these zone fault detections with possible further internal and external signals. The delay times for the distance zones can be started either all together on general fault detection by the distance protection function, or individually at the moment the fault enters the respective distance zone. Parameter **Start Timers** (address 1210) is set by default to ***on Dis. Pickup***. This setting ensures that all delay times continue to run together even if the type of fault or the selected measuring loop changes, e.g. because an intermediate infeed is switched off. It is also the preferred setting if other distance protection relays in the power system are working with this start timing. Where grading of the delay times is especially important, for instance if the fault location shifts from zone Z3 to zone Z2, the setting ***on Zone Pickup*** should be chosen.

Angle of inclination of the tripping characteristics

The shape of the tripping characteristic is among other factors influenced by the inclination angle **Distance Angle** (address 1211). Details about the tripping characteristics can be found in Sub-section 2.2.2 and 2.2.3). Usually, the line angle is set here, i.e. the same value as in address 1105 **Line Angle** (Section 2.1.4.1). Irrespective of the line angle it is, however, possible to select a different inclination angle of the tripping characteristic.

Parallel line measured value correction (optional)

The mutual coupling between the two lines of a double-circuit configuration is only relevant to the 7SA522 when it is applied on a double-circuit line and when it is intended to implement parallel line compensation. A prerequisite is that the earth current of the parallel line is connected to the I_4 measuring input of the device and this is entered in the configuration settings. In this case, address 1215 **Paral.Line Comp** has to be set to ***YES*** (default setting).

The coupling factors were already set as part of the general protection data (Section 2.1.4.1), as was the reach of the parallel line compensation.

Double earth faults in effectively earthed systems

The loop selection for double earth faults is set at address 1221 **2Ph-E faults** (Phase-to-Phase Earth fault detection). This parameter can only be altered in DIGSI at **Display Additional Settings**. In most cases, ***Block leading Ø*** (blocking of the leading phase, default setting) is favourable because the leading phase-to-earth loop tends to overreach, especially in conjunction with large earth fault resistance. In certain cases (fault resistance phase-to-phase larger than phase-to-earth) the setting ***Block lagging Ø*** (blocking of the lagging phase) may be more favourable. The evaluation of all affected loops with the setting ***All loops*** allows a maximum degree of redundancy. It is also possible to evaluate ***Ø-Ø loops only***. This ensures the highest accuracy for 2-phase-to-earth faults. Finally it is possible to declare only the phase-to-earth loops as valid (setting ***Ø-E loops only***).

Double earth faults in non-earthed systems

In isolated or resonant-earthed systems it must be guaranteed that the preference for double earth faults in whole galvanically-connected systems is consistent. The double earth fault preference is set in address 1220 **PHASE PREF.2phe**.

7SA522 also enables the user to detect all base points of a multiple earth fault. **PHASE PREF.2phe** = ***All loops*** means that each earth fault base point is switched off independant of any preference. It can also be combined with a different preference. For a transformer feeder, for example, any base point can be switched off following occurrence of a double earth fault, whereas ***L1 (L3) ACYCLIC*** is consistently valid for the remainder of the system.

If the earth fault detection threatens to pick up due to fault inception transients following the occurrence of a single earth fault, the detection can be delayed via parameter **T3IO 1PHAS** (address 1206). Usually the presetting (0.04 s) is sufficient. For large resonant-earthed systems the time delay should be increased. Set parameter **T3IO 1PHAS** to ∞ if the earth current threshold can also be exceeded during steady-state conditions. Then, even with high earth current, no single-phase pickup is possible anymore. Double earth faults are, however, detected correctly and evaluated according to the preference mode.

Note

When testing a single earth fault by means of a test equipment, it must be made sure that the phase-to-phase voltages fulfill the symmetry criterion.

Switching onto a Fault

To determine the reaction of the distance protection during closure of the circuit breaker onto a fault, the parameter in address 1232 **SOTF zone** is used. When setting to ***Inactive*** there is no special reaction, i.e. all distance stages operate according to their preset zone parameters. The setting ***Zone Z1B*** causes all faults inside overreaching zone Z1B (in the direction specified for these zones) to be cleared without delay following closure of the circuit breaker. If ***Z1B undirect.*** is set, the zone Z1B is relevant, but it acts in both directions, regardless of the operating direction set in address 1351 **Op. mode Z1B**. The setting to ***Zone Z1*** causes all faults inside the zone Z1 (in the direction specified for this zone) to be cleared without delay following closure of the circuit breaker. This setting is only useful if a delay time has been set for the zone Z1. If ***Z1 undirect.***

is set, the zone Z1 is relevant, however, it acts in both directions, regardless of the operating direction set in address 1301 **Op. mode Z1**. The setting ***PICKUP*** implies that the non-delayed tripping following line energization is activated for all recognized faults in any zone (i.e. with general fault detection of the distance protection).

Load Range

On long heavily loaded lines, the risk of encroachment of the load impedance into the tripping characteristics of the distance protection may exist. To exclude the risk of unwanted fault detection by the distance protection during heavy load flow, a load trapezoid characteristic may be set for tripping characteristics with large R-reaches, which excludes such unwanted fault detection by overload. This load area is considered in the description of the tripping characteristics (see also Section 2.2.2 and Section 2.2.3).

The R value **R load (Ø-E)** (address 1241) refers to the phase-to-earth loops, **R load (Ø-Ø)** (address 1243) to the phase-to-phase loops. The values are set somewhat (approx. 10 %) below the minimum expected load impedance. The minimum load impedance appears when the maximum load current and minimum operating voltage exist.

For a 1-pole tripping, the setting of the load trapezoid characteristic for earth loops must consider the load current in the earth path. This is very critical for double circuit lines (on a tower with significant coupling between both lines). Due to the zero sequence mutual coupling, a significant amount of load current will flow in the „zero sequence“ path when the parallel line has a single pole open condition. The R setting for the ground loops (or load encroachment setting) must take into account the ground current that flows when the parallel line has a single pole open condition.

Calculation Example 1:

110 kV-overhead line 150 mm^2, 3-pole tripping, with the following data:

maximum transmittable power

P_{max}	= 100 MVA corresponds to
I_{max}	= 525 A

minimum operating voltage

U_{min}	= 0.9 U_N
Current Transformer	600 A / 5 A
Voltage Transformer	110 kV / 0.1 kV

The resultant minimum load impedance is therefore:

$$R_{L\,prim} = \frac{U_{min}}{\sqrt{3} \cdot I_{L\,max}} = \frac{0.9 \cdot 110\ kV}{\sqrt{3} \cdot 525\ A} = 108.87\ \Omega$$

This value can be entered as a primary value when parameterizing with a PC and DIGSI. The conversion to secondary values is

$$R_{L\,sec} = \frac{N_{CT}}{N_{VT}} \cdot R_{L\,prim} = \frac{600\ A / 5\ A}{110\ kV / 0.1\ kV} \cdot 108.87\ \Omega = 11.88\ \Omega$$

when applying a security margin of 10% the following is set:

R load (Ø-Ø) = **97.98** Ω primary = **10.69** Ω secondary

R load (Ø-E) = **97.98** Ω primary = **10.69** Ω secondary

The spread angle of the load trapezoid characteristicφ **load (Ø-E)** (address 1242) and φ **load (Ø-Ø)** (address 1244) must be greater (approx. 5°) than the maximum arising load angle (corresponding to the minimum power factor cosφ).

Minimum power factor (example)

$\cos \varphi_{min}$ = 0.63

φ_{max} = 51°

Setting value φ **load (Ø-Ø)** = φ_{max} + 5° = **56°**.

Calculation Example 2:

For applications with parallel line (zero sequence mutual coupling) and single pole tripping:

400 kV overhead line (220 km) on double tower with the following data:

Maximum power flow per circuit when both lines in service:

P_{max} = 1200 MVA corresponds to

I_{max} = 1,732 A

minimum operating voltage

U_{min} = 0,9 U_N

Current Transformer 2000 A/5 A

Voltage Transformer 400 kV/0.1 kV

Setting parameter RE/RL 1.54

The resulting minimum load impedance is therefore:

$$R_{L\ prim} = \frac{U_{min}}{\sqrt{3} \cdot I_{L\_Max}} = \frac{0.9 \cdot 400\ kV}{\sqrt{3} \cdot 1732\ A} = 120\ \Omega$$

This value applies for phase-to-phase measurement. The setting for ground loops must also consider the condition when the parallel line has a single pole open condition. In this state, the load current on the „healthy line“ will increase in the phase with single pole open condition as well as in the ground path. To determine the minimum load resistance in the ground loops during this state, the magnitude of the load current in the ground path must be set. For the calculation, it is given as a ratio relative to the load current I_{max} calculated above.

Ratio between I_E on healthy line and I_{max} when parallel line has a single pole open condition:

$$\frac{IE_{pole\_open}}{I_{max}} = 0.4$$

This ratio depends on the line length as well as on the source and line impedances. If it is not possible to determine this value from power system simulations, a value between 0.4 for long double lines (200 km) and 0.6 for short lines (25 km) may be assumed.

The resultant minimum load impedance for phase-to-earth loops is therefore:

$$R_{L\,prim\_Ph\text{-}E} = \frac{R_{L\,prim}}{1 + \frac{IE_{pole\_open}}{I_{max}}\left(1 + \frac{RE}{RL}\right)} = \frac{120}{1 + 0.4 \cdot (1 + 1.54)} = 59.5\ \Omega$$

This value may be entered as a primary value when parameterizing with a PC and DIGSI. Conversion to secondary quantities is:

$$R_{L\,sec} = \frac{N_{CT}}{N_{VT}} \cdot R_{L\,prim} = \frac{\frac{2000}{5}}{\frac{400}{0.1}} \cdot 120\ \Omega = 12\ \Omega$$

$$R_{L\,sec\_Ph\text{-}E} = \frac{N_{CT}}{N_{VT}} \cdot R_{L\,prim\_Ph\text{-}E} = \frac{\frac{2000}{5}}{\frac{400}{0.1}} \cdot 59.5\ \Omega = 5.95\ \Omega$$

when applying a security margin of 10% the following is set:

- **R load (Ø-Ø)** = **108** Ω primary = **10.8** Ω secondary
- **R load (Ø-E)** = **53.5** Ω primary = **5.35** Ω secondary

The spread angle of the load trapezoid characteristicis calculated based on the minimum power factor in the same manner as for single line (Calculation Example 1).

2.2.1.4 Settings

Addresses which have an appended "A" can only be changed with DIGSI, under Additional Settings.

The table indicates region-specific presettings. Column C (configuration) indicates the corresponding secondary nominal current of the current transformer.

Addr.	Parameter	C	Setting Options	Default Setting	Comments
1201	FCT Distance		ON OFF	ON	Distance protection
1202	Minimum Iph>	1A	0.05 .. 4.00 A	0.10 A	Phase Current threshold for dist. meas.
		5A	0.25 .. 20.00 A	0.50 A	
1203	3I0> Threshold	1A	0.05 .. 4.00 A	0.10 A	3I0 threshold for neutral current pickup
		5A	0.25 .. 20.00 A	0.50 A	
1204	3U0> Threshold		1 .. 100 V; ∞	5 V	3U0 threshold zero seq. voltage pickup
1205	3U0> COMP/ISOL.		10 .. 200 V; ∞	∞ V	3U0> pickup (comp/ isol. star-point)
1206	T3I0 1PHAS		0.00 .. 0.50 sec; ∞	0.04 sec	Delay 1ph-faults (comp/isol. star-point)
1207A	3I0>/ Iphmax		0.05 .. 0.30	0.10	3I0>-pickup-stabilisation (3I0> /Iphmax)
1208	SER-COMP.		NO YES	NO	Series compensated line
1209A	E/F recognition		3I0> OR 3U0> 3I0> AND 3U0>	3I0> OR 3U0>	criterion of earth fault recognition
1210	Start Timers		on Dis. Pickup on Zone Pickup	on Dis. Pickup	Condition for zone timer start
1211	Distance Angle		30 .. 90 °	85 °	Angle of inclination, distance charact.
1215	Paral.Line Comp		NO YES	YES	Mutual coupling parall.line compensation
1220	PHASE PREF.2phe		L3 (L1) ACYCLIC L1 (L3) ACYCLIC L2 (L1) ACYCLIC L1 (L2) ACYCLIC L3 (L2) ACYCLIC L2 (L3) ACYCLIC L3 (L1) CYCLIC L1 (L3) CYCLIC All loops	L3 (L1) ACYCLIC	Phase preference for 2phe faults
1221A	2Ph-E faults		Block leading Ø Block lagging Ø All loops Ø-Ø loops only Ø-E loops only	Block leading Ø	Loop selection with 2Ph-E faults
1223	Uph-ph unbal.		5 .. 50 %	25 %	Max Uph-ph unbal. for 1ph Flt. detection

Addr.	Parameter	C	Setting Options	Default Setting	Comments
1232	SOTF zone		PICKUP Zone Z1B Z1B undirect. Zone Z1 Z1 undirect. Inactive	Inactive	Instantaneous trip after SwitchOnToFault
1241	R load (Ø-E)	1A	0.100 .. 600.000 Ω; ∞	∞ Ω	R load, minimum Load Impedance (ph-e)
		5A	0.020 .. 120.000 Ω; ∞	∞ Ω	
1242	φ load (Ø-E)		20 .. 60 °	45 °	PHI load, maximum Load Angle (ph-e)
1243	R load (Ø-Ø)	1A	0.100 .. 600.000 Ω; ∞	∞ Ω	R load, minimum Load Impedance (ph-ph)
		5A	0.020 .. 120.000 Ω; ∞	∞ Ω	
1244	φ load (Ø-Ø)		20 .. 60 °	45 °	PHI load, maximum Load Angle (ph-ph)
1305	T1-1phase		0.00 .. 30.00 sec; ∞	0.00 sec	T1-1phase, delay for single phase faults
1306	T1-multi-phase		0.00 .. 30.00 sec; ∞	0.00 sec	T1multi-ph, delay for multi phase faults
1315	T2-1phase		0.00 .. 30.00 sec; ∞	0.30 sec	T2-1phase, delay for single phase faults
1316	T2-multi-phase		0.00 .. 30.00 sec; ∞	0.30 sec	T2multi-ph, delay for multi phase faults
1317A	Trip 1pole Z2		NO YES	NO	Single pole trip for faults in Z2
1325	T3 DELAY		0.00 .. 30.00 sec; ∞	0.60 sec	T3 delay
1335	T4 DELAY		0.00 .. 30.00 sec; ∞	0.90 sec	T4 delay
1345	T5 DELAY		0.00 .. 30.00 sec; ∞	0.90 sec	T5 delay
1355	T1B-1phase		0.00 .. 30.00 sec; ∞	0.00 sec	T1B-1phase, delay for single ph. faults
1356	T1B-multi-phase		0.00 .. 30.00 sec; ∞	0.00 sec	T1B-multi-ph, delay for multi ph. faults
1357	1st AR -> Z1B		NO YES	YES	Z1B enabled before 1st AR (int. or ext.)
1365	T6 DELAY		0.00 .. 30.00 sec; ∞	1.50 sec	T6 delay

2.2.1.5 Information List

No.	Information	Type of Information	Comments
3603	>BLOCK Distance	SP	>BLOCK Distance protection
3611	>ENABLE Z1B	SP	>ENABLE Z1B (with setted Time Delay)
3613	>ENABLE Z1Binst	SP	>ENABLE Z1B instantanous (w/o T-Delay)
3617	>BLOCK Z4-Trip	SP	>BLOCK Z4-Trip
3618	>BLOCK Z5-Trip	SP	>BLOCK Z5-Trip
3619	>BLOCK Z4 Ph-E	SP	>BLOCK Z4 for ph-e loops

No.	Information	Type of Information	Comments
3620	>BLOCK Z5 Ph-E	SP	>BLOCK Z5 for ph-e loops
3621	>BLOCK Z6-Trip	SP	>BLOCK Z6-Trip
3622	>BLOCK Z6 Ph-E	SP	>BLOCK Z6 for ph-e loops
3651	Dist. OFF	OUT	Distance is switched off
3652	Dist. BLOCK	OUT	Distance is BLOCKED
3653	Dist. ACTIVE	OUT	Distance is ACTIVE
3654	Dis.ErrorK0(Z1)	OUT	Setting error K0(Z1) or Angle K0(Z1)
3655	DisErrorK0(>Z1)	OUT	Setting error K0(>Z1) or Angle K0(>Z1)
3671	Dis. PICKUP	OUT	Distance PICKED UP
3672	Dis.Pickup L1	OUT	Distance PICKUP L1
3673	Dis.Pickup L2	OUT	Distance PICKUP L2
3674	Dis.Pickup L3	OUT	Distance PICKUP L3
3675	Dis.Pickup E	OUT	Distance PICKUP Earth
3681	Dis.Pickup 1pL1	OUT	Distance Pickup Phase L1 (only)
3682	Dis.Pickup L1E	OUT	Distance Pickup L1E
3683	Dis.Pickup 1pL2	OUT	Distance Pickup Phase L2 (only)
3684	Dis.Pickup L2E	OUT	Distance Pickup L2E
3685	Dis.Pickup L12	OUT	Distance Pickup L12
3686	Dis.Pickup L12E	OUT	Distance Pickup L12E
3687	Dis.Pickup 1pL3	OUT	Distance Pickup Phase L3 (only)
3688	Dis.Pickup L3E	OUT	Distance Pickup L3E
3689	Dis.Pickup L31	OUT	Distance Pickup L31
3690	Dis.Pickup L31E	OUT	Distance Pickup L31E
3691	Dis.Pickup L23	OUT	Distance Pickup L23
3692	Dis.Pickup L23E	OUT	Distance Pickup L23E
3693	Dis.Pickup L123	OUT	Distance Pickup L123
3694	Dis.Pickup123E	OUT	Distance Pickup123E
3701	Dis.Loop L1-E f	OUT	Distance Loop L1E selected forward
3702	Dis.Loop L2-E f	OUT	Distance Loop L2E selected forward
3703	Dis.Loop L3-E f	OUT	Distance Loop L3E selected forward
3704	Dis.Loop L1-2 f	OUT	Distance Loop L12 selected forward
3705	Dis.Loop L2-3 f	OUT	Distance Loop L23 selected forward
3706	Dis.Loop L3-1 f	OUT	Distance Loop L31 selected forward
3707	Dis.Loop L1-E r	OUT	Distance Loop L1E selected reverse
3708	Dis.Loop L2-E r	OUT	Distance Loop L2E selected reverse
3709	Dis.Loop L3-E r	OUT	Distance Loop L3E selected reverse
3710	Dis.Loop L1-2 r	OUT	Distance Loop L12 selected reverse
3711	Dis.Loop L2-3 r	OUT	Distance Loop L23 selected reverse
3712	Dis.Loop L3-1 r	OUT	Distance Loop L31 selected reverse
3713	Dis.Loop L1E<->	OUT	Distance Loop L1E selected non-direct.
3714	Dis.Loop L2E<->	OUT	Distance Loop L2E selected non-direct.
3715	Dis.Loop L3E<->	OUT	Distance Loop L3E selected non-direct.
3716	Dis.Loop L12<->	OUT	Distance Loop L12 selected non-direct.
3717	Dis.Loop L23<->	OUT	Distance Loop L23 selected non-direct.
3718	Dis.Loop L31<->	OUT	Distance Loop L31 selected non-direct.
3719	Dis. forward	OUT	Distance Pickup FORWARD

No.	Information	Type of Information	Comments
3720	Dis. reverse	OUT	Distance Pickup REVERSE
3741	Dis. Z1 L1E	OUT	Distance Pickup Z1, Loop L1E
3742	Dis. Z1 L2E	OUT	Distance Pickup Z1, Loop L2E
3743	Dis. Z1 L3E	OUT	Distance Pickup Z1, Loop L3E
3744	Dis. Z1 L12	OUT	Distance Pickup Z1, Loop L12
3745	Dis. Z1 L23	OUT	Distance Pickup Z1, Loop L23
3746	Dis. Z1 L31	OUT	Distance Pickup Z1, Loop L31
3747	Dis. Z1B L1E	OUT	Distance Pickup Z1B, Loop L1E
3748	Dis. Z1B L2E	OUT	Distance Pickup Z1B, Loop L2E
3749	Dis. Z1B L3E	OUT	Distance Pickup Z1B, Loop L3E
3750	Dis. Z1B L12	OUT	Distance Pickup Z1B, Loop L12
3751	Dis. Z1B L23	OUT	Distance Pickup Z1B, Loop L23
3752	Dis. Z1B L31	OUT	Distance Pickup Z1B, Loop L31
3755	Dis. Pickup Z2	OUT	Distance Pickup Z2
3758	Dis. Pickup Z3	OUT	Distance Pickup Z3
3759	Dis. Pickup Z4	OUT	Distance Pickup Z4
3760	Dis. Pickup Z5	OUT	Distance Pickup Z5
3762	Dis. Pickup Z6	OUT	Distance Pickup Z6
3770	Dis.Time Out T6	OUT	DistanceTime Out T6
3771	Dis.Time Out T1	OUT	DistanceTime Out T1
3774	Dis.Time Out T2	OUT	DistanceTime Out T2
3777	Dis.Time Out T3	OUT	DistanceTime Out T3
3778	Dis.Time Out T4	OUT	DistanceTime Out T4
3779	Dis.Time Out T5	OUT	DistanceTime Out T5
3780	Dis.TimeOut T1B	OUT	DistanceTime Out T1B
3801	Dis.Gen. Trip	OUT	Distance protection: General trip
3802	Dis.Trip 1pL1	OUT	Distance TRIP command - Only Phase L1
3803	Dis.Trip 1pL2	OUT	Distance TRIP command - Only Phase L2
3804	Dis.Trip 1pL3	OUT	Distance TRIP command - Only Phase L3
3805	Dis.Trip 3p	OUT	Distance TRIP command Phases L123
3811	Dis.TripZ1/1p	OUT	Distance TRIP single-phase Z1
3813	Dis.TripZ1B1p	OUT	Distance TRIP single-phase Z1B
3816	Dis.TripZ2/1p	OUT	Distance TRIP single-phase Z2
3817	Dis.TripZ2/3p	OUT	Distance TRIP 3phase in Z2
3818	Dis.TripZ3/T3	OUT	Distance TRIP 3phase in Z3
3821	Dis.TRIP 3p. Z4	OUT	Distance TRIP 3phase in Z4
3822	Dis.TRIP 3p. Z5	OUT	Distance TRIP 3phase in Z5
3823	DisTRIP3p. Z1sf	OUT	DisTRIP 3phase in Z1 with single-ph Flt.
3824	DisTRIP3p. Z1mf	OUT	DisTRIP 3phase in Z1 with multi-ph Flt.
3825	DisTRIP3p.Z1Bsf	OUT	DisTRIP 3phase in Z1B with single-ph Flt
3826	DisTRIP3p Z1Bmf	OUT	DisTRIP 3phase in Z1B with multi-ph Flt.
3827	Dis.TRIP 3p. Z6	OUT	Distance TRIP 3phase in Z6
3850	DisTRIP Z1B Tel	OUT	DisTRIP Z1B with Teleprotection scheme

2.2.2 Distance protection with quadrilateral characteristic (optional)

The 7SA522 distance protection has a polygonal tripping characteristic. Depending on which version was ordered, an MHO circle tripping characteristic can be set. If both characteristics are available, they may be selected separately for phase-phase loops and phase-earth loops. If only the MHO circle tripping characteristic is used, please go to Section 2.2.3.

2.2.2.1 Method of Operation

Operating polygons

In total, there are six independent zones and one additional controlled zone for each fault impedance loop. Figure 2-19 shows the shape of the polygons as example. Zone Z6 is not shown in Figure 2-19. The first zone is shaded and forward directional. The third zone is reverse directional.

In general, the polygon is defined by means of a parallelogram which intersects the axes with the values R and X as well as the tilt φ_{Dist}. A load trapezoid with the setting R_{Load} and φ_{Load} may be used to cut the area of the load impedance out of the polygon. The axial coordinates can be set individually for each zone; φ_{Dist}, R_{Load} and φ_{Load} are common for all zones. The parallelogram is symmetrical with respect to the origin of the R-X-coordinate system; the directional characteristic however limits the tripping range to the desired quadrants (refer to „Direction determination“ below).

The R-reach may be set separately for the phase-to-phase faults and the phase-to-earth faults to achieve a larger fault resistance coverage for earth faults if this is desired.

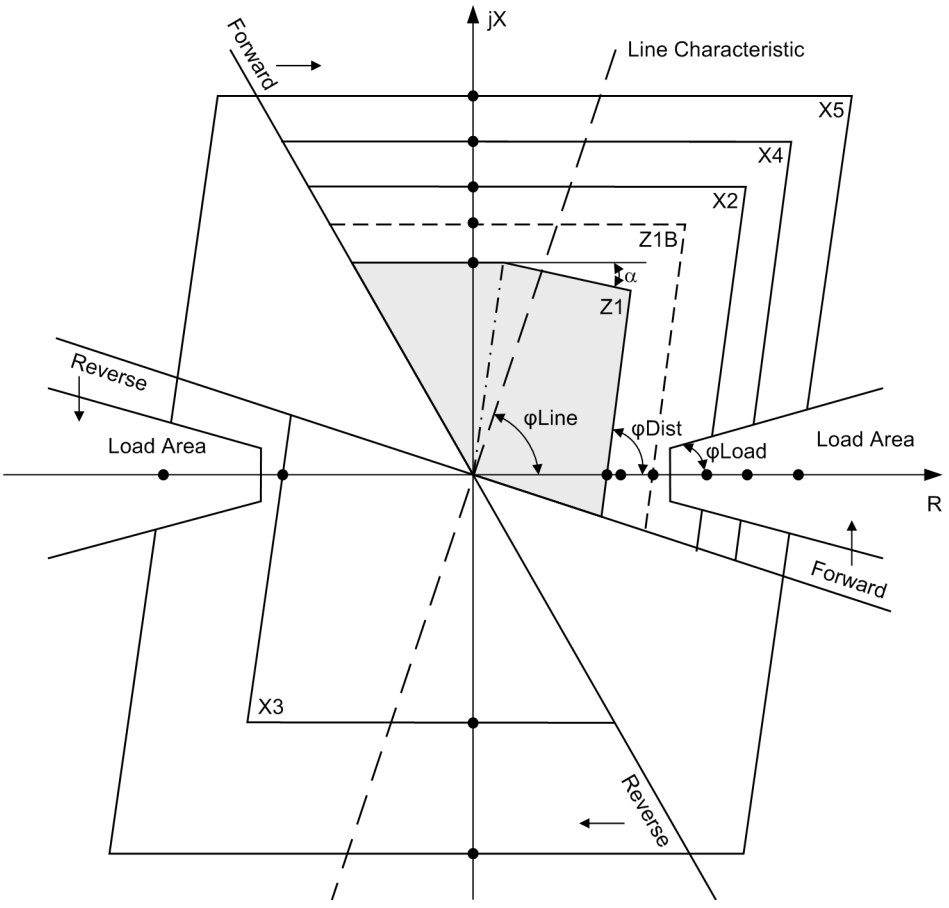

Figure 2-19 Polygonal characteristic (setting values are marked by dots)

For the first zone Z1, an additional settable tilt α exists, which may be used to prevent overreach resulting from angle variance and/or two ended infeed to short-circuits with fault resistance. For Z1B and the higher zones, this tilt does not exist.

Determination of direction

For each loop an impedance vector is also used to determine the direction of the short-circuit. Usually similar to the distance calculation, $\underline{Z}_L$ is used. However, depending on the „quality“ of the measured values, different computation techniques are used. Immediately after fault inception, the short-circuit voltage is disturbed by transients. The voltage memorised prior to fault inception is therefore used in this situation. If even the steady-state short-circuit voltage (during a close-up fault) is too small for direction determination, an unfaulted voltage is used. This voltage is in theory perpendicular to the actual short-circuit voltage for both phase-to-earth loops as well as for phase-to-phase loops (Figure 2-20). This is taken into account when computing the direction vector by means of a 90° rotation. Table 2-4 shows the allocation of the measured values to the six fault loops for the determination of the fault direction.

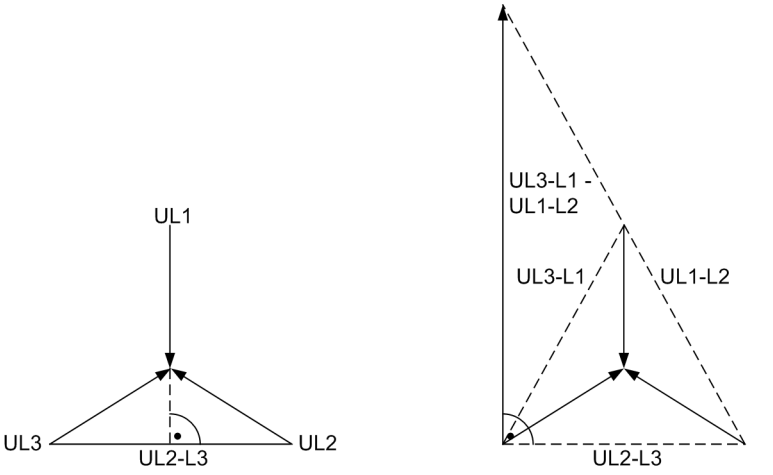

Figure 2-20 Direction determination with unfaulted voltages (cross polarizing)

Table 2-4 Voltage and current values for the determination of fault direction

Loop	Measuring Current (Direction)	Actual short-circuit voltage	Unfaulted voltage
L1-E	$\underline{I}_{L1}$	$\underline{U}_{L1-E}$	$\underline{U}_{L2} - \underline{U}_{L3}$
L2-E	$\underline{I}_{L2}$	$\underline{U}_{L2-E}$	$\underline{U}_{L3} - \underline{U}_{L1}$
L3-E	$\underline{I}_{L3}$	$\underline{U}_{L3-E}$	$\underline{U}_{L1} - \underline{U}_{L2}$
L1-E[1)]	$\underline{I}_{L1} - \underline{I}_{E}$[1)]	$\underline{U}_{L1-E}$	$\underline{U}_{L2} - \underline{U}_{L3}$
L2-E[1)]	$\underline{I}_{L2} - \underline{I}_{E}$[1)]	$\underline{U}_{L2-E}$	$\underline{U}_{L3} - \underline{U}_{L1}$
L3-E[1)]	$\underline{I}_{L3} - \underline{I}_{E}$[1)]	$\underline{U}_{L3-E}$	$\underline{U}_{L1} - \underline{U}_{L2}$
L1-L2	$\underline{I}_{L1} - \underline{I}_{L2}$	$\underline{U}_{L1} - \underline{U}_{L2}$	$\underline{U}_{L2-L3} - \underline{U}_{L3-L1}$
L2-L3	$\underline{I}_{L2} - \underline{I}_{L3}$	$\underline{U}_{L2} - \underline{U}_{L3}$	$\underline{U}_{L3-L1} - \underline{U}_{L1-L2}$
L3-L1	$\underline{I}_{L3} - \underline{I}_{L1}$	$\underline{U}_{L3} - \underline{U}_{L1}$	$\underline{U}_{L1-L2} - \underline{U}_{L2-L3}$

[1)] with consideration of earth impedance compensation

If there is neither a current measured voltage nor a memorized voltage available which is sufficient for measuring the direction, the relay selects the ***Forward*** direction. In practice this can only occur when the circuit breaker closes onto a de-energized line, and there is a fault on this line (e.g. closing onto an earthed line).

Figure 2-21 shows the theoretical steady-state characteristic. In practice, the limits of the directional characteristic when using memorized voltages is dependent on both the source impedance and the load transferred across the line prior to fault inception. Accordingly the directional characteristic includes a safety margin with respect to the borders of the first quadrant in the R–X diagram (Figure 2-21).

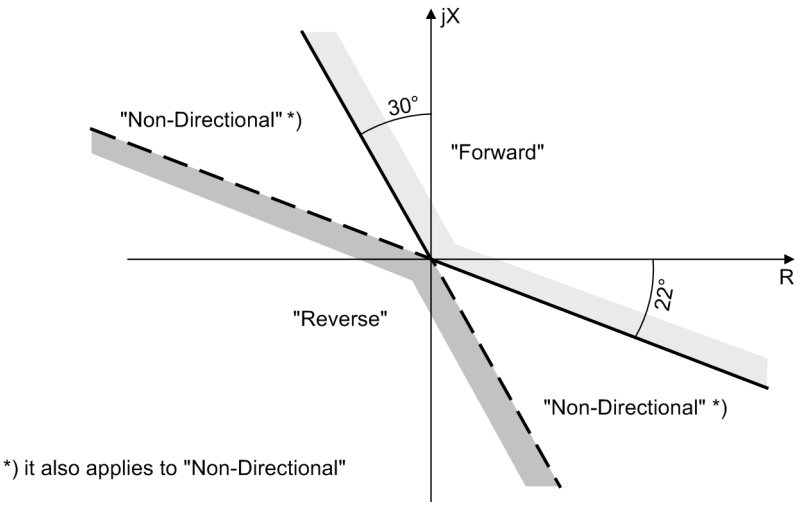

Figure 2-21 Directional characteristic in the R-X-diagram

Since each zone can be set to ***Forward***, ***Reverse*** or ***Non-Directional***, different (centrically mirrored) directional characteristics are available for ***Forward*** and ***Reverse***. A non-directional zone has no directional characteristic. The entire tripping region applies here.

Characteristics of the Direction Determination

The theoretical steady-state directional characteristic shown in Figure 2-21 applies to faulted loop voltages. In the case of quadrature voltages or memorized voltage, the position of the directional characteristic is dependent on both the source impedance as well as the load transferred across the line prior to fault inception.

Figure 2-22 shows the directional characteristic using quadrature or memorized voltage as well as taking the source impedance into account (no load transfer). As these voltages are equal to the corresponding generator voltage $\underline{E}$ and they do not change after fault inception, the directional characteristic is shifted in the impedance diagram by the source impedance $\underline{Z}_{S1} = \underline{E}_1/\underline{I}_1$. For the fault location F_1 (Figure 2-22a) the short-circuit location is in the forward direction and the source impedance is in the reverse direction. For all fault locations, right up to the device location (current transformers), a definite ***Forward*** decision is made (Figure 2-22b). If the current direction is reversed, the position of the directional characteristic changes abruptly (Figure 2-22c). A reversed current $\underline{I}_2$ now flows via the measuring location (current transformer) which is determined by the source impedance $\underline{Z}_{S2} + \underline{Z}_L$. When load is transferred across the line, the directional characteristic may additionally be rotated by the load angle.

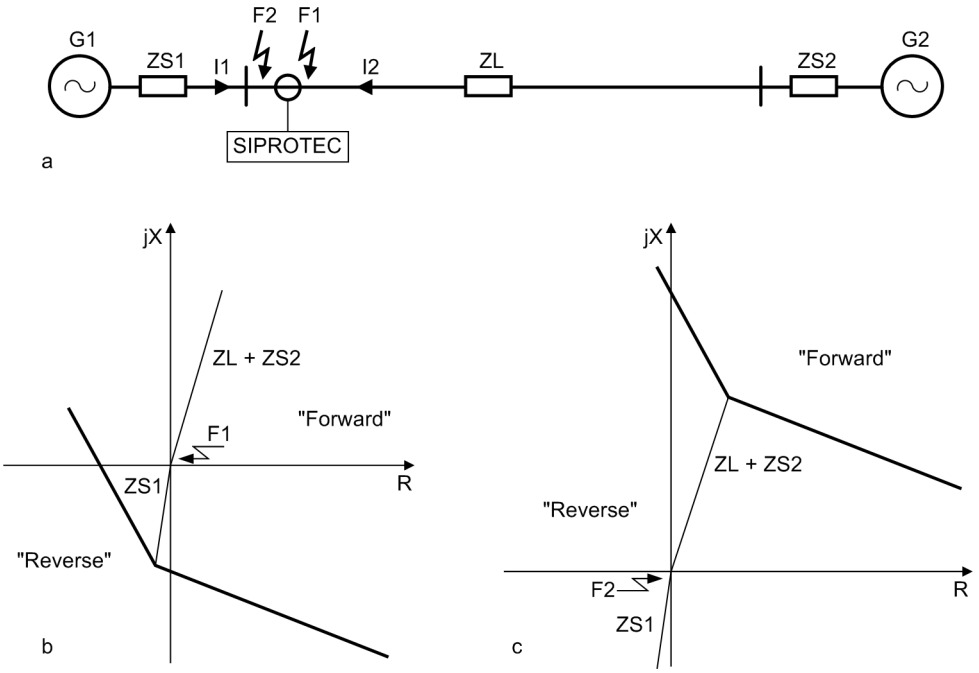

Figure 2-22 Directional characteristic with quadrature or memorized voltages

Determination of direction in case of series-compensated lines

The directional characteristics and their displacement by the source impedance apply also for lines with series capacitors. If a short-circuit occurs behind the local series capacitors, the short-circuit voltage however reverses its direction until the protective spark gap has picked up (see Figure 2-23).

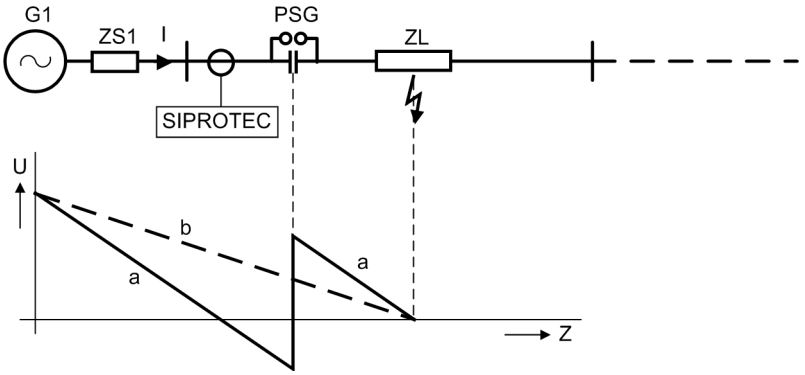

Figure 2-23 Voltage characteristic while a fault occurs after a series capacitor.

a) without pickup of the protective spark gap

b) with pickup of the protective spark gap

The distance protection function would thus detect a wrong fault direction. The use of memorized voltages however ensures that the direction is correctly detected (see Figure 2-24a).

Since the voltage prior to the fault is used to determine the direction, the peak displacement of the directional characteristics in dependence of the source impedance and infeed conditions before the fault are displaced so far that the capacitor reactance — which is always smaller than the series reactance — does not cause the apparent direction reversal (Figure 2-24b).

If the short-circuit is located before the capacitor, from the relay location (current transformer) in reverse direction, the peak displacement of the directional characteristics are shifted to the other direction (Figure 2-24c). A correct determination of the direction is thus also ensured in this case.

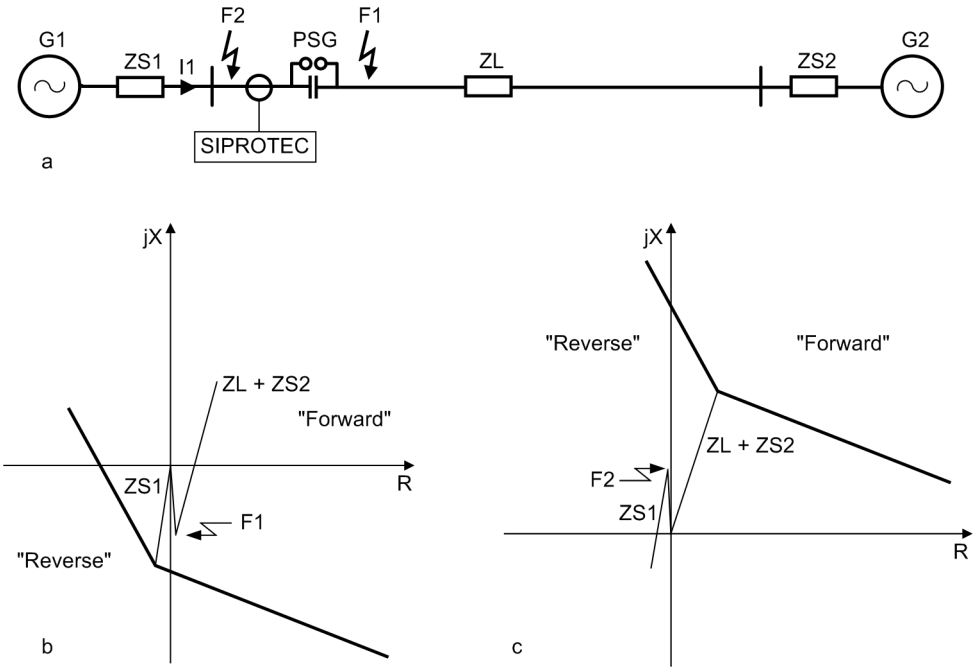

Figure 2-24 Directional characteristics for series-compensated lines

Assignment to the Polygons and Zone Pick-up

The loop impedances calculated according to Sub-section 2.2.1 are assigned to the characteristics set for the distance zones. To avoid unstable signals at the boundaries of a polygon, the characteristics have a hysteresis of approximately 5 %, i.e. as soon as it has been determined that the fault impedance lies within a polygon, the boundaries are increased by 5 % in all directions.

As soon as the fault impedance of any loop is definitely within the operating polygon of a distance zone, the affected loop is designated as „picked up“.

For each zone „pickup“ signals are generated and converted to phase information, e.g. „Dis Z1 L1“ (internal message) for zone Z1 and phase L1; this means that each phase and each zone is provided with separate pickup information; the information is then processed in the zone logic and by additional functions (e.g. teleprotection logic, Section 2.6). The loop information is also converted to phase-segregated information. Another condition for „pickup“ of a zone is that the direction matches the direction configured for this zone (refer also to Section 2.3). Furthermore the distance protection may not be blocked or switched off completely. Figure 2-25 shows these conditions.

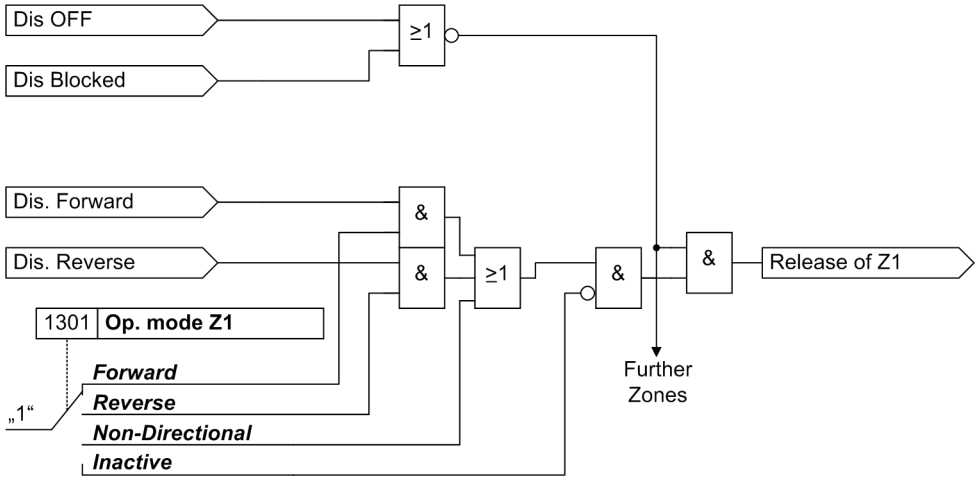

Figure 2-25 Release logic for one zone (example for Z1)

In total, the following zones are available:

Independent zones:

- 1st zone (fast tripping zone) Z1 with **X(Z1)**; **R(Z1) Ø-Ø**, **RE(Z1) Ø-E**; may be delayed by **T1-1phase** or **T1-multi-phase**,
- 2nd zone (backup zone) Z2 with **X(Z2)**; **R(Z2) Ø-Ø**, **RE(Z2) Ø-E**; may be delayed by **T2-1phase** or **T2-multi-phase**,
- 3rd zone (backup zone) Z3 with **X(Z3)**; **R(Z3) Ø-Ø**, **RE(Z3) Ø-E**; may be delayed by **T3 DELAY**,
- 4th zone (backup zone) Z4 with **X(Z4)**; **R(Z4) Ø-Ø**, **RE(Z4) Ø-E**; may be delayed by **T4 DELAY**,
- 5th zone (backup zone) Z5 with **X(Z5)+** (forward) and **X(Z5)-** (reverse); **R(Z5) Ø-Ø**, **RE(Z5) Ø-E**, may be delayed by **T5 DELAY**.
- 6th zone (backup zone) Z6 with **X(Z6)+** (forward) and **X(Z6)-** (reverse); **R(Z6) Ø-Ø**, **RE(Z6) Ø-E**, may be delayed by **T6 DELAY**.

Dependent (controlled) zone:

- Overreaching zone Z1B with **X(Z1B)**; **R(Z1B) Ø-Ø**, **RE(Z1B) Ø-E**; may be delayed by **T1B-1phase** or **T1B-multi-phase**.

2.2.2.2 Setting Notes

Grading coordination chart

It is recommended to initially create a grading coordination chart for the entire galvanically interconnected system. This diagram should reflect the line lengths with their primary reactances X in Ω/km. For the reach of the distance zones, the reactances X are the deciding quantity.

The first zone Z1 is usually set to cover 85 % of the protected line without any trip time delay (i.e. T1 = 0.00 s). The protection clears faults in this range without additional time delay, i.e. the tripping time is the relay basic operating time.

The tripping time of the higher zones is sequentially increased by one time grading interval. The grading margin must take into account the circuit breaker operating time including the spread of this time, the resetting time of the protection equipment as well as the spread of the protection delay timers. Typical values are 0.2 s to 0.4 s. The reach is selected to cover up to approximately 80 % of the zone with the same set time delay on the shortest neighbouring feeder (see Figure 2-26).

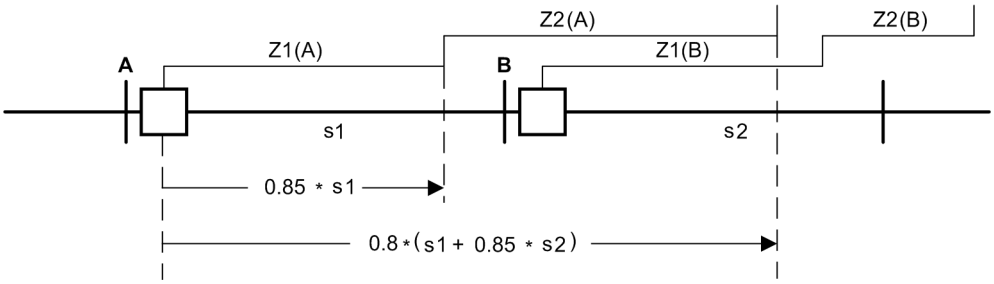

Figure 2-26 Setting the reach - example for device A

s1, s2 Protected line section

When using a personal computer and the DIGSI software to apply the settings, the values can be optionally entered as primary or secondary values.

In the case of parameterization with secondary quantities, the values derived from the grading coordination chart must be converted to the secondary side of the current and voltage transformers. In general:

$$Z_{secondary} = \frac{\text{Current Transformer Ratio}}{\text{Voltage Transformer Ratio}} \cdot Z_{primary}$$

Accordingly, the reach for any distance zone can be specified as follows:

$$X_{sec} = \frac{N_{CT}}{N_{VT}} \cdot X_{prim}$$

where

N_{CT} = Current transformer ratio

N_{VT} = Transformation ratio of voltage transformer

Calculation Example:

110 kV overhead line 150 mm^2 with the following data:

s (length) = 35 km

R_1/s = 0.19 Ω/km

X_1/s = 0.42 Ω/km

R_0/s = 0.53 Ω/km

X_0/s = 1.19 Ω/km

Current Transformer 600 A/5 A

Voltage transformer 110 kV / 0.1 kV

The following line data is calculated:

$R_L = 0.19\ \Omega/km \cdot 35\ km = 6.65\ \Omega$

$X_L = 0.42\ \Omega/km \cdot 35\ km = 14.70\ \Omega$

For the first zone, a setting of 85 % of the line length should be applied, which results in primary:

$X1_{prim} = 0.85 \cdot X_L = 0.85 \cdot 14.70\ \Omega = 12.49\ \Omega$

or secondary:

$$X1_{sec} = \frac{N_{CT}}{N_{VT}} \cdot X1_{prim} = \frac{600\ A / 5\ A}{110\ kV / 0.1\ kV} \cdot 12.49\ \Omega = 1.36\ \Omega$$

Resistance tolerance

The resistance setting R allows a reserve for fault resistance which appears as an additional resistance at the fault location and is added to the impedance of the line conductors. It comprises, for example, the resistance in arcs, the earth distribution resistance of earth points and others. The setting must consider these fault resistances, but should at the same time not be larger than necessary. On long heavily loaded lines, the setting may extend into the load impedance range. Fault detection due to overload conditions is then prevented with the load impedance range. Refer to margin heading „Load range“ in Section 2.2.1. The resistance tolerance may be separately set for the phase-phase faults on the one hand and the phase-earth faults on the other hand. It is therefore possible to allow for a larger fault resistance for earth faults for example.

Most important for this setting on overhead lines, is the resistance of the fault arc. In cables on the other hand, an appreciable arc can not exist. On very short cables, care must however be taken that an arc fault on the local cable termination is inside the set resistance of the first zone.

The standard value for the arc voltage U_{Arc} is approx. 2.5 kV per meter of arc length.

Example:

A maximum arc voltage of 8 kV is assumed for phase-to-phase faults (line data as above). If the minimum primary short-circuit current is assumed to be 1000 A this corresponds to 8 Ω primary. The resistance setting for the first zone, including a safety margin of 20%, would be

primary:

$R1_{prim} = 0.5 \cdot R_{arc} \cdot 1.2 = 0.5 \cdot 8\ \Omega \cdot 1.2 = 4.8\ \Omega$

or secondary:

$$R1_{sec} = \frac{N_{CT}}{N_{VT}} \cdot R1_{prim} = \frac{600\ A / 5\ A}{110\ kV / 0.1\ kV} \cdot 4.8\ \Omega = 0.524\ \Omega$$

Only half the arc resistance was applied in the equation, as it is added to the loop impedance and therefore only half the arc resistance appears in the **per phase** impedance. Since an arc resistance is assumed to be present in this case, infeed from the opposite end need not be considered.

The resistance R_L of the line itself can be ignored with SIPROTEC 4 devices. It is taken into account by the shape of the polygon, provided that the inclination angle of the polygon **`Distance Angle`** (address 1211) is not set greater than the line angle **`Line Angle`** (address 1105).

A separate resistance tolerance can be set for earth faults. Figure 2-27 illustrates the relationships.

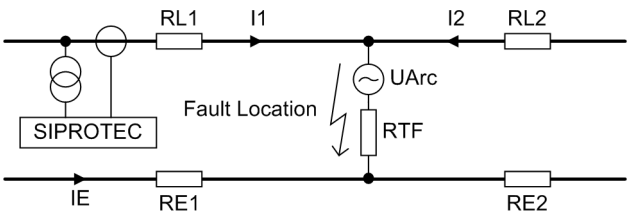

Figure 2-27 Resistance measurement of the distance protection in the presence of arc faults

The maximum arc resistance R_{Arc} must be determined for setting the distance zone in R direction. The maximum arc fault resistance is attained when the smallest fault current at which an arc is still present flows during an earth fault.

$$R_{Arc} = \frac{U_{Arc}}{I_1 + I_2} = \frac{U_{Arc}}{I_1 \cdot \left(1 + \frac{I_2}{I_1}\right)}$$

The earth fault resistance measured by the distance protection then results from the formula below (it is assumed that I_1 and I_E are in phase opposition):

$$R_{RE} = R_{L1} + \left(1 + \frac{I_2}{I_1}\right) \cdot \frac{R_{Arc} + R_{TF}}{1 + \frac{R_E}{R_L}}$$

with

R_{RE} Resistance measured by the SIPROTEC distance protection

R_{L1} Line resistance up to the fault location

R_{Arc} Arc resistance

R_E/R_L Setting in the distance protection (address 1116 and 1118)

I_2/I_1 Ratio between earth fault currents at the opposite end and the local end. For a correct R setting of the distance zone, the most unfavourable case must be considered. This most unfavourable case would be a maximum earth fault current at the opposite end and a minimum earth fault current at the local end. Moreover, the currents considered are the r.m.s. values without phase displacement. Where no information is available on the current ratio, a value of approx. „3“ can be assumed. On radial feeders with negligible infeed from the opposite end, this ratio is „0“.

R_{TF} Effective tower footing resistance of the overhead line system. Where no information is available on the amount of tower footing resistance, a value of 3 Ω can be assumed for overhead lines with earth wire (see also /5/).

The following recommended setting applies for the resistance tolerance of distance zone Z1:

$$R_{1E} = 1.2 \cdot \left(\left(1 + \frac{I_2}{I_1}\right) \cdot \frac{R_{Arc} + R_{TF}}{1 + \frac{R_E}{R_L}} \right)$$

with

R_{1E} Setting in the distance protection **RE(Z1) Ø-E**, address 1304

1.2 Safety margin 20%

The resistance R_L of the line itself can be ignored with SIPROTEC 4 devices. It is taken into account by the shape of the polygon, provided that the inclination angle of the polygon **Distance Angle** (address 1211) is not set greater than the line angle **Line Angle** (address 1105).

Example:

Arc length: 2 m

Minimum fault current: 1.0 kA

Effective tower footing resistance of the overhead line system: 3 Ω

with

I_2/I_1	= 3
R_E/R_L	= 0,6
Voltage transformer	110 kV / 0.1 kV
Current transformer	600 A / 5 A

The arc resistance would be:

$$R_{Arc} = \frac{2\ m \cdot 2.5\ kV/m}{1\ kA \cdot (1+3)} = 1.25\ \Omega$$

The tower footing resistances are $R_M = 3\ \Omega$

As a result, the resistance must be set to

primary:

$$R_{1Eprim} = 1.2 \cdot \left(\left(1 + \frac{I_2}{I_1}\right) \cdot \frac{R_{Arc} + R_{TF}}{1 + \frac{R_E}{R_L}} \right) = 1.2 \cdot \left(4 \cdot \frac{4.25}{1.16}\right) = 12.75\ \Omega$$

or secondary:

$$R_{1Esec} = \left(\frac{N_{CT}}{N_{VT}} \cdot R_{1Eprim}\right) = \frac{\frac{600\ A}{5\ A}}{\frac{110\ kV}{0.1\ kV}} \cdot 12.75\ \Omega = 1.39\ \Omega$$

In practice, the ratio between resistance and reactance setting is situated in the ranges shown below (see also /5/):

Type of Line	R/X Ratio of the Zone Setting
Short underground cable lines (approx. 0.5 km to 3 km / 0.3 to 1.88 miles)	3 to 5
Longer underground cable lines (> 3 km / 1.88 miles)	2 to 3
Short overhead lines < 10 km (6.25 miles)	2 to 5
Overhead lines < 100 km (62.5 miles)	1 to 2
Long overhead lines between 100 km and 200 km (62.5 miles and 125 miles)	0.5 to 1
Long EHV lines > 200 km (125 miles)	≤ 0,5

Note

The following must be kept in mind for short lines with a high R/X ratio for the zone setting: The angle errors of the current and voltage transformers cause a rotation of the measured impedance in the direction of the R axis. If due to the polygon, R_E/R_L and X_E/X_L settings the loop reach in R direction is large in relation to the X direction, there is an increased risk of external faults being shifted into zone Z1. A grading factor of 85 % should only be used up to R/X ≤ 1 (loop reach). For larger R/X settings, a reduced grading factor for zone 1 can be calculated with the following formula (see also /5/)

The reduced grading factor is calculated from:

GF = Grading factor = reach of zone Z1 in relation to the line length

R = Loop reach in R direction for zone Z1 = $R1 \cdot (1+R_E/R_L)$

X = Loop reach in X direction for zone Z1 = $X1 \cdot (1+X_E/X_L)$

δ_U = Voltage transformer angle error (typical: 1°)

δ_I = Current transformer angle error (typical: 1°)

$$GF \le \left[1 - \frac{R}{X} \cdot \tan(\delta_U + \delta_I)\right] \cdot 88.5\ \%$$

In addition or as an alternative, it is also possible to use the setting 1307 **`Zone Reduction`**, to modify the inclination of the zone Z1 polygon and thus prevent overreach (see Figure 2-19).

Note

On long lines with small R/X ratio, care must be taken to ensure that the R reach of the zone settings is at least about half of the associated X setting. This is especially important for zone Z1 and overreach zone Z1B in order to achieve the shortest possible tripping times.

Independent Zones Z1 to Z6

By means of the parameter MODE = ***Forward*** or ***Reverse*** or ***Non-Directional***, each zone can be set (address 1301 **Op. mode Z1**, 1311 **Op. mode Z2**, 1321 **Op. mode Z3**, 1331 **Op. mode Z4**, 1341 **Op. mode Z5** and 1361 **Op. mode Z6**). This allows any combination of graded zones - forward, reverse or non-directional -, for example on transformers, generators, or bus couplers. For the fifth and sixth zone, you can additionally set different reaches for forward and reverse. Zones that are not required are set to ***Inactive***.

The values derived from the grading coordination chart are set for each of the required zones. The setting parameters are grouped for each zone. For the first zone these are the parameters **R(Z1) Ø-Ø** (address 1302) for the R intersection of the polygon applicable to phase-to-phase faults, **X(Z1)** (address 1303) for the X intersection (reach), **RE(Z1) Ø-E** (address 1304) for the R intersection applicable to phase-to-earth faults and delay time settings.

If a fault resistance at the fault location (arc, tower footing etc.) causes a voltage drop in the measured impedance loop, the phase angle difference between this voltage and the measured loop current may shift the determined fault location in X direction. Parameter 1307 **Zone Reduction** allows an inclination of the upper limit of zone Z1 in the 1st quadrant (see Figure 2-19). This prevents spurious pickup of zone Z1 in the presence of faults outside the protected area. Since a detailed calculation in this context can only apply for one specific system and fault condition, and a virtually unlimited number of complex calculations would be required to determine the setting, we suggest a simplified but well-proven method here:

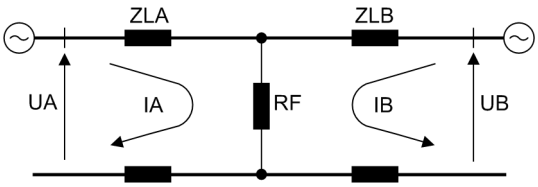

Figure 2-28 Equivalent circuit diagram for the recommended angle setting **Zone Reduction**.

The voltage drop at the fault location is:

$\underline{U}_F = (\underline{I}_A + \underline{I}_B) \cdot R_F$

If $\underline{I}_A$ and $\underline{I}_B$ have equal phase, then $\underline{U}_F$ and $\underline{I}_A$ have equal phase too. In this case the fault resistance R_F does not influence the measured X in the loop, and the **Zone Reduction** can be set to 0°.

In practice, $\underline{I}_A$ and $\underline{I}_B$ do not have equal phase; the difference results mostly from the phase difference between $\underline{U}_A$ and $\underline{U}_B$. This angle (also called load angle) is therefore used to determine the **Zone Reduction** angle.

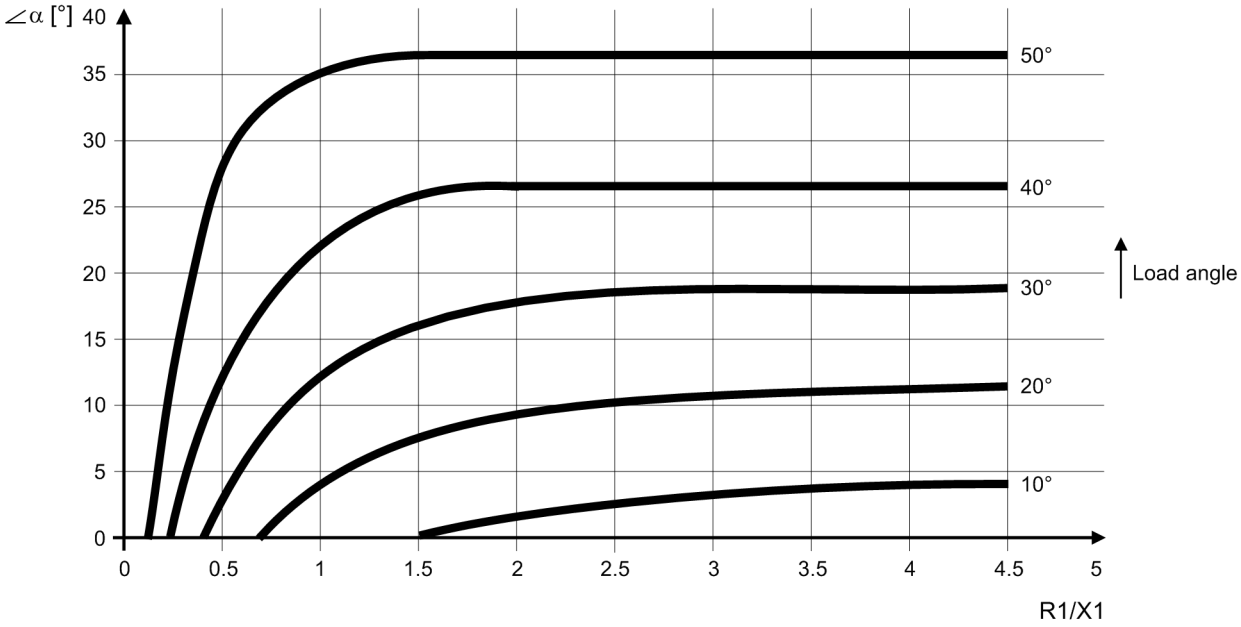

Figure 2-29 Recommended setting for 1307 **Zone Reduction** (this graphic applies for overhead lines with a line angle of more than 60°. A smaller setting may be chosen for cables or protected objects with a smaller angle)

The first step to determine the setting for 1307 **Zone Reduction** is to determine the maximum load angle for normal operation (by computer simulation). If this information is not available, a value of about 20° can be assumed for Western Europe. For other regions with less closely meshed systems, larger angles may have to be chosen. The next step is to select from Figure 2-29 the curve that matches the load angle. With the set ratio R1/X1 (zone Z1 polygon) the appropriate setting for 1307 **Zone Reduction** is then determined.

Example:

With a load angle of 20° and a setting R/X = 2.5 (R1 = 25 Ω, X1 = 10 Ω), a setting of 10° is adequate for 1307 **Zone Reduction**.

Different delay times can be set for single- and multiple-phase faults in the first zone: **T1-1phase** (Address 1305) and **T1-multi-phase** (address 1306). The first zone is normally set to operate without additional time delay.

For the remaining zones the following correspondingly applies:

X(Z2) (address 1313), **R(Z2) Ø-Ø** (address 1312), **RE(Z2) Ø-E** (address 1314);

X(Z3) (address 1323), **R(Z3) Ø-Ø** (address 1322), **RE(Z3) Ø-E** (address 1324);

X(Z4) (address 1333), **R(Z4) Ø-Ø** (address 1332), **RE(Z4) Ø-E** (address 1334);

X(Z5)+ (address 1343) for forward direction, **X(Z5)-** (address 1346) for reverse direction, **R(Z5) Ø-Ø** (address 1342), **RE(Z5) Ø-E** (address 1344);

X(Z6)+ (address 1363) for forward direction, **X(Z6)-** (address 1366) for reverse direction, **R(Z6) Ø-Ø** (address 1362), **RE(Z6) Ø-E** (address 1364).

For the second zone, it is also possible to set separate delay times for single-phase and multi-phase faults. In general, the delay times are set the same. If stability problems are expected during multi-phase faults, a shorter delay time could be considered for **T2-multi-phase** (address 1316) while tolerating a longer delay time for single-phase faults with **T2-1phase** (address 1315).

The zone timers for the remaining zones are set with the parameters **T3 DELAY** (address 1325), **T4 DELAY** (address 1335), **T5 DELAY** (address 1345), and **T6 DELAY** (address 1365).

If the device is provided with the capability to trip single-pole, single-pole tripping is then possible in the zones Z1 and Z2. While single-pole tripping usually applies to single-phase faults in Z1 (if the remaining conditions for single-pole tripping are satisfied), this may also be selected for the second zone with address 1317 **Trip 1pole Z2**. Single pole tripping in zone 2 is only possible if this address is set to ***YES***. The default setting is ***NO***.

Note

For instantaneous tripping (undelayed) in the forward direction, the first zone **Z1** should always be used, as only the zone Z1 and Z1B are guaranteed to trip with the shortest operating time of the device. The further zones should be used sequentially for grading in the forward direction.

If instantaneous tripping (undelayed) is required in the reverse direction, the zone **Z3** should be used for this purpose, as only this zone ensures instantaneous pickup with the shortest device operating time for faults in the reverse direction. This setting is also recommended in teleprotection ***BLOCKING*** schemes.

With the binary input indications 3619 „>BLOCK Z4 Ph-E“ and 3620 „>BLOCK Z5 Ph-E“ and 3622 „>BLOCK Z6 Ph-E“, the zones Z4, Z5 and Z6 can be blocked for phase-to-earth loops. To block these zones permanently for phase-to-earth loops, these binary input indications must be set permanently to the logic value of 1 via CFC.

Zone Z5 is preferably set as a non-directional final stage. It should include all other zones and also have sufficient reach in reverse direction. This ensures adequate pickup of the distance protection in response to fault conditions and correct verification of the short-circuit loops even under unfavourable conditions.

Note

Even if you do not need a non-directional distance stage, you should set Z5 according to the above aspects. Setting T5 to infinite prevents that this stage causes a trip.

Controlled zone Z1B

The overreaching zone Z1B is a controlled zone. The normal zones Z1 to Z6 are not influenced by Z1B. There is no zone switching, but rather the overreaching zone is activated or deactivated by the corresponding criteria. In address 1351 **Op. mode Z1B** = ***Forward***, it can also be switched to ***Reverse*** or ***Non-Directional***. If this stage is not required, it is set to ***Inactive*** (address 1351). The setting options are similar to those of zone Z1: Address 1352 **R(Z1B) Ø-Ø**, address 1353 **X(Z1B)**, address 1354 **RE(Z1B) Ø-E**. The delay times for single-phase and multiple-phase faults can again be set separately: **T1B-1phase** (address 1355) and **T1B-multi-phase** (address 1356). If parameter **Op. mode Z1B** is set to ***Forward*** or ***Reverse***, a non-directional trip is also possible in case of closure onto a fault if parameter 1232 **SOTF zone** is set to ***Z1B undirect.*** (see also Section 2.2.1.3).

Zone Z1B is often used in combination with automatic reclosure and/or teleprotection schemes. It can be activated internally by the teleprotection functions (see also Section 2.6) or the integrated automatic reclosure (if available, see also Section 2.13), or externally by a binary input. It is generally set to at least 120 % of the line length. On three-terminal lines („teed feeders“), it must be set to securely reach beyond the longest line section, even when there is additional infeed via the tee point. The delay times are set in accordance with the type of application, usually to zero or a very small delay. When used in conjunction with teleprotection comparison schemes, the dependence on the fault detection must be considered (refer to margin heading „Distance Protection Prerequisites“ in Section 2.6.10).

If the distance protection is used in conjunction with an external automatic recloser, it can be determined in address 1357 **1st AR -> Z1B** which distance zone is released prior to starting the AR. Usually, the overreaching zone Z1B is used for the first cycle (**1st AR -> Z1B** = ***YES***). This may be suppressed by changing the setting of **1st AR -> Z1B** to ***NO***. In this case, the overreaching zone Z1B is not released before and during the first automatic reclose cycle. Zone Z1 is always released. When using an external automatic reclosing device, the setting only has an effect if the readiness of the automatic recloser is signalled via binary input „>Enable ARzones“ (No. 383).

The zones **Z4**, **Z5** and **Z6** can be blocked for phase-to-earth loops using a binary input message 3619 „>BLOCK Z4 Ph-E“, 3620 „>BLOCK Z5 Ph-E“ or 3622 „>BLOCK Z6 Ph-E“. To block these zones permanently for phase-to-earth loops, said binary inputs must be set to the logic value of 1 via CFC.

Minimum Current of Zone Z1

In earthed systems with parallel lines and only single-sided starpoint earthing it may be necessary to allow a tripping of Z1 only when exceeding an increased phase current threshold. In address 1308 **Iph>(Z1)** you can define for this purpose a separate minimum current for the zone Z1. In this case, a pickup of zone Z1 is only possible if the phase currents exceed this threshold value as well as the threshold value for the release of the distance measurement (1202 **Minimum Iph>**).

The parameter 1308 **Iph>(Z1)** is only visible and effective, if the address 119 **Iph>(Z1)** is set to ***Enabled***. The use of the separate minimum current for Z1 is only recommended if the network constellation has been checked by calculation.

2.2.2.3 Settings

Addresses which have an appended "A" can only be changed with DIGSI, under Additional Settings.

The table indicates region-specific presettings. Column C (configuration) indicates the corresponding secondary nominal current of the current transformer.

Addr.	Parameter	C	Setting Options	Default Setting	Comments
1301	Op. mode Z1		Forward Reverse Non-Directional Inactive	Forward	Operating mode Z1
1302	R(Z1) Ø-Ø	1A	0.050 .. 600.000 Ω	1.250 Ω	R(Z1), Resistance for ph-ph-faults
		5A	0.010 .. 120.000 Ω	0.250 Ω	
1303	X(Z1)	1A	0.050 .. 600.000 Ω	2.500 Ω	X(Z1), Reactance
		5A	0.010 .. 120.000 Ω	0.500 Ω	
1304	RE(Z1) Ø-E	1A	0.050 .. 600.000 Ω	2.500 Ω	RE(Z1), Resistance for ph-e faults
		5A	0.010 .. 120.000 Ω	0.500 Ω	
1305	T1-1phase		0.00 .. 30.00 sec; ∞	0.00 sec	T1-1phase, delay for single phase faults
1306	T1-multi-phase		0.00 .. 30.00 sec; ∞	0.00 sec	T1multi-ph, delay for multi phase faults
1307	Zone Reduction		0 .. 45 °	0 °	Zone Reduction Angle (load compensation)
1308	Iph>(Z1)	1A	0.05 .. 20.00 A	0.20 A	Minimum current for Z1 only Iph>(Z1)
		5A	0.25 .. 100.00 A	1.00 A	

Addr.	Parameter	C	Setting Options	Default Setting	Comments
1311	Op. mode Z2		Forward Reverse Non-Directional Inactive	Forward	Operating mode Z2
1312	R(Z2) Ø-Ø	1A	0.050 .. 600.000 Ω	2.500 Ω	R(Z2), Resistance for ph-ph-faults
		5A	0.010 .. 120.000 Ω	0.500 Ω	
1313	X(Z2)	1A	0.050 .. 600.000 Ω	5.000 Ω	X(Z2), Reactance
		5A	0.010 .. 120.000 Ω	1.000 Ω	
1314	RE(Z2) Ø-E	1A	0.050 .. 600.000 Ω	5.000 Ω	RE(Z2), Resistance for ph-e faults
		5A	0.010 .. 120.000 Ω	1.000 Ω	
1315	T2-1phase		0.00 .. 30.00 sec; ∞	0.30 sec	T2-1phase, delay for single phase faults
1316	T2-multi-phase		0.00 .. 30.00 sec; ∞	0.30 sec	T2multi-ph, delay for multi phase faults
1317A	Trip 1pole Z2		NO YES	NO	Single pole trip for faults in Z2
1321	Op. mode Z3		Forward Reverse Non-Directional Inactive	Reverse	Operating mode Z3
1322	R(Z3) Ø-Ø	1A	0.050 .. 600.000 Ω	5.000 Ω	R(Z3), Resistance for ph-ph-faults
		5A	0.010 .. 120.000 Ω	1.000 Ω	
1323	X(Z3)	1A	0.050 .. 600.000 Ω	10.000 Ω	X(Z3), Reactance
		5A	0.010 .. 120.000 Ω	2.000 Ω	
1324	RE(Z3) Ø-E	1A	0.050 .. 600.000 Ω	10.000 Ω	RE(Z3), Resistance for ph-e faults
		5A	0.010 .. 120.000 Ω	2.000 Ω	
1325	T3 DELAY		0.00 .. 30.00 sec; ∞	0.60 sec	T3 delay
1331	Op. mode Z4		Forward Reverse Non-Directional Inactive	Non-Directional	Operating mode Z4
1332	R(Z4) Ø-Ø	1A	0.050 .. 600.000 Ω	12.000 Ω	R(Z4), Resistance for ph-ph-faults
		5A	0.010 .. 120.000 Ω	2.400 Ω	
1333	X(Z4)	1A	0.050 .. 600.000 Ω	12.000 Ω	X(Z4), Reactance
		5A	0.010 .. 120.000 Ω	2.400 Ω	
1334	RE(Z4) Ø-E	1A	0.050 .. 600.000 Ω	12.000 Ω	RE(Z4), Resistance for ph-e faults
		5A	0.010 .. 120.000 Ω	2.400 Ω	
1335	T4 DELAY		0.00 .. 30.00 sec; ∞	0.90 sec	T4 delay
1341	Op. mode Z5		Forward Reverse Non-Directional Inactive	Inactive	Operating mode Z5

Addr.	Parameter	C	Setting Options	Default Setting	Comments
1342	R(Z5) Ø-Ø	1A	0.050 .. 600.000 Ω	12.000 Ω	R(Z5), Resistance for ph-ph-faults
		5A	0.010 .. 120.000 Ω	2.400 Ω	
1343	X(Z5)+	1A	0.050 .. 600.000 Ω	12.000 Ω	X(Z5)+, Reactance for Forward direction
		5A	0.010 .. 120.000 Ω	2.400 Ω	
1344	RE(Z5) Ø-E	1A	0.050 .. 600.000 Ω	12.000 Ω	RE(Z5), Resistance for ph-e faults
		5A	0.010 .. 120.000 Ω	2.400 Ω	
1345	T5 DELAY		0.00 .. 30.00 sec; ∞	0.90 sec	T5 delay
1346	X(Z5)-	1A	0.050 .. 600.000 Ω	4.000 Ω	X(Z5)-, Reactance for Reverse direction
		5A	0.010 .. 120.000 Ω	0.800 Ω	
1351	Op. mode Z1B		Forward Reverse Non-Directional Inactive	Forward	Operating mode Z1B (overrreach zone)
1352	R(Z1B) Ø-Ø	1A	0.050 .. 600.000 Ω	1.500 Ω	R(Z1B), Resistance for ph-ph-faults
		5A	0.010 .. 120.000 Ω	0.300 Ω	
1353	X(Z1B)	1A	0.050 .. 600.000 Ω	3.000 Ω	X(Z1B), Reactance
		5A	0.010 .. 120.000 Ω	0.600 Ω	
1354	RE(Z1B) Ø-E	1A	0.050 .. 600.000 Ω	3.000 Ω	RE(Z1B), Resistance for ph-e faults
		5A	0.010 .. 120.000 Ω	0.600 Ω	
1355	T1B-1phase		0.00 .. 30.00 sec; ∞	0.00 sec	T1B-1phase, delay for single ph. faults
1356	T1B-multi-phase		0.00 .. 30.00 sec; ∞	0.00 sec	T1B-multi-ph, delay for multi ph. faults
1357	1st AR -> Z1B		NO YES	YES	Z1B enabled before 1st AR (int. or ext.)
1361	Op. mode Z6		Forward Reverse Non-Directional Inactive	Inactive	Operating mode Z6
1362	R(Z6) Ø-Ø	1A	0.050 .. 600.000 Ω	15.000 Ω	R(Z6), Resistance for ph-ph-faults
		5A	0.010 .. 120.000 Ω	3.000 Ω	
1363	X(Z6)+	1A	0.050 .. 600.000 Ω	15.000 Ω	X(Z6)+, Reactance for Forward direction
		5A	0.010 .. 120.000 Ω	3.000 Ω	
1364	RE(Z6) Ø-E	1A	0.050 .. 600.000 Ω	15.000 Ω	RE(Z6), Resistance for ph-e faults
		5A	0.010 .. 120.000 Ω	3.000 Ω	
1365	T6 DELAY		0.00 .. 30.00 sec; ∞	1.50 sec	T6 delay
1366	X(Z6)-	1A	0.050 .. 600.000 Ω	4.000 Ω	X(Z6)-, Reactance for Reverse direction
		5A	0.010 .. 120.000 Ω	0.800 Ω	

2.2.3 Distance protection with MHO characteristic (optional)

The distance protection 7SA522 has a polygonal trip characteristic. Depending on which version was ordered (10th digit of the order number ≠ A), it is possible to set to an MHO characteristic. If both characteristics are available, they may be selected separately for phase-to-phase loops and phase-to-earth loops. If only the polygonal tripping characteristic is used, please read Section 2.2.2.

2.2.3.1 Functional Description

Basic characteristic

One MHO characteristic is defined for each distance zone, which represents the tripping characteristic of the corresponding zone. In total there are six independent and one additional controlled zone for each fault impedance loop. The basic shape of an MHO characteristic is shown in Figure 2-30 as an example of a zone.

The MHO characteristic is defined by the line of its diameter which intersects the origin of the coordinate system and the magnitude of the diameter which corresponds to the impedance Z_r which determines the reach, and by the angle of inclination. The angle of inclination is set in address 1211 **`Distance Angle`** and corresponds normally to the line angle φ_{Line}. A load trapezoid with the setting R_{Load} and φ_{Load} may be used to cut the area of the load impedance out of the characteristic. The reach Z_r may be separately set for each zone; the inclination angle φ_{Dist} as well as the load impedance parameters R_{Load}, and φ_{Load} are common to all zones. As the characteristic intersects the origin of the coordinate system, a separate directional characteristic is not required.

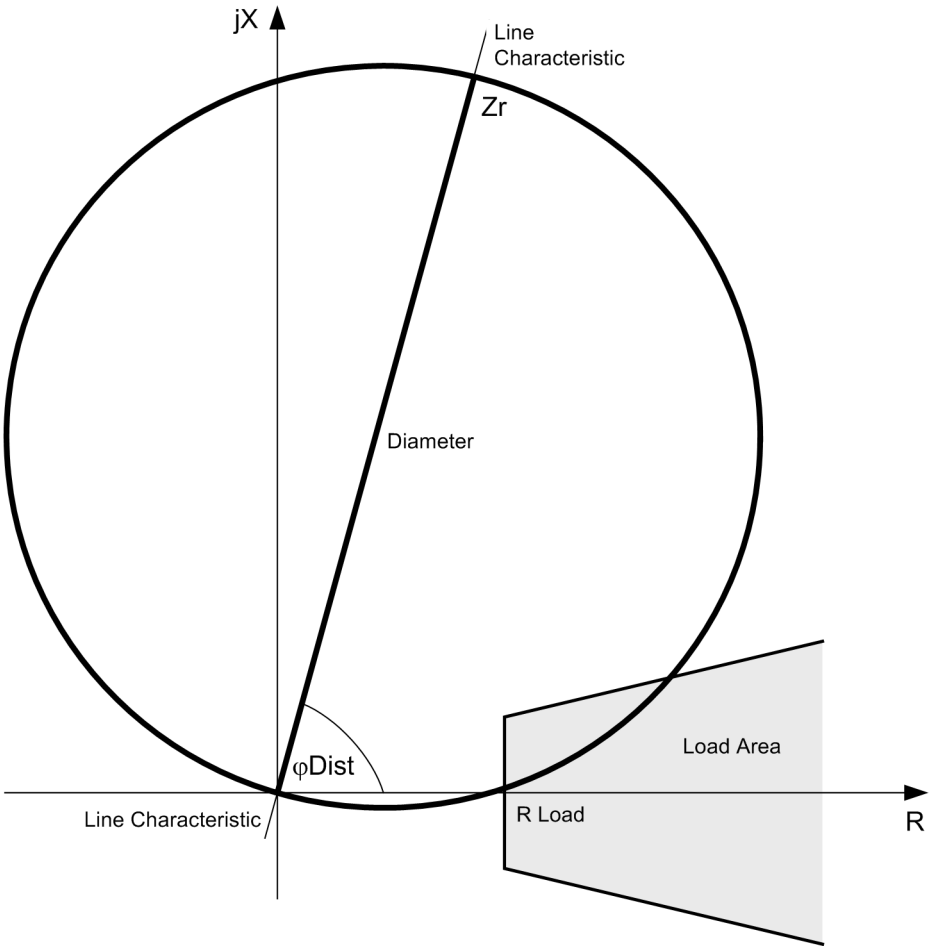

Figure 2-30 Basic shape of an MHO characteristic

Polarised MHO characteristic

As is the case with all characteristics that pass through the origin of the coordinate system, the MHO characteristic boundary around the origin itself is also not defined as the measured voltage is zero or too small to be evaluated in this case. For this reason, the MHO characteristic is polarized. The polarization determines the lower zenith of the circle, i.e. the lower intersection of the diameter line with the circumference. The upper zenith which is determined by the reach setting Z_r remains unchanged. Immediately after fault inception, the short-circuit voltage is disturbed by transients; the voltage memorized prior to fault inception is therefore used for polarization. This causes a displacement of the lower zenith by an impedance corresponding to the memorized voltage (refer to Figure 2-31). When the memorized short-circuit voltage is too small, an unfaulted voltage is used. In theory, this voltage is perpendicular to the voltage of the faulted loop for both phase-to-earth loops as well as phase-to-phase loops. This is taken into account by the calculation by means of a 90° rotation. The unfaulted loop voltage also causes a displacement of the lower zenith of the MHO characteristic.

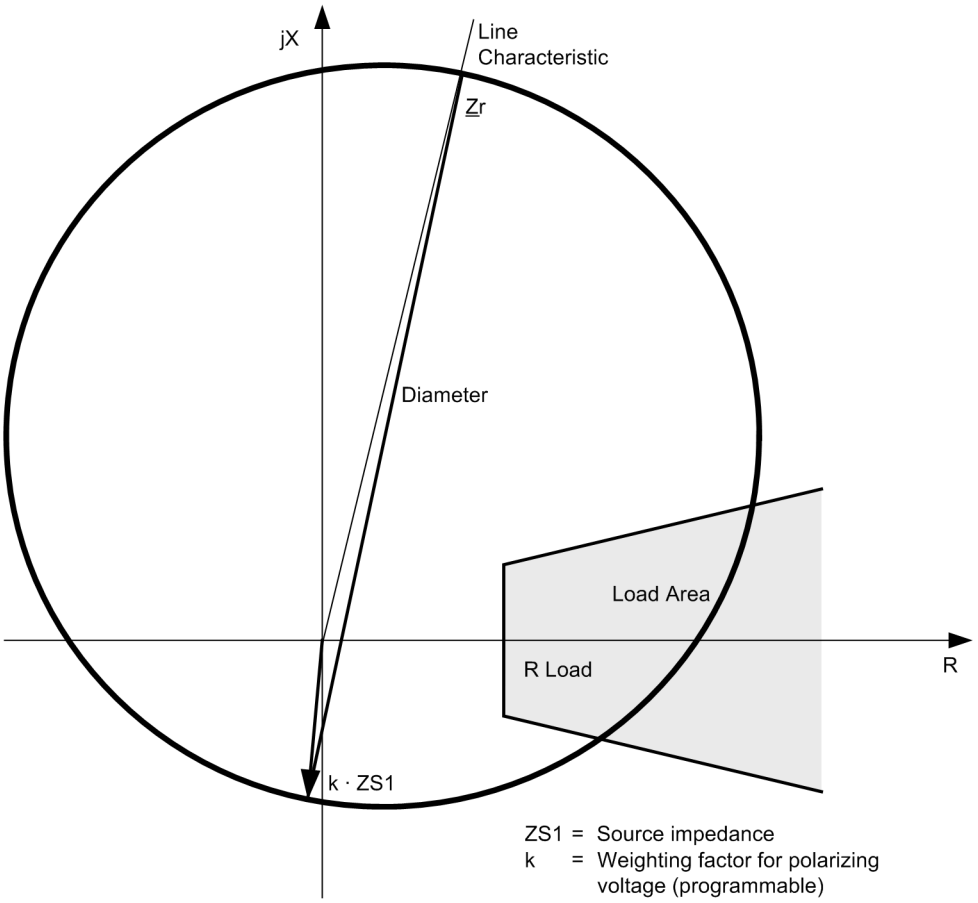

Figure 2-31 Polarized MHO characteristic

Properties of the MHO Characteristic

As the quadrature or memorized voltage (without load transfer) equals the corresponding generator voltage $\underline{E}$ and does not change after fault inception (refer also to Figure 2-32), the lower zenith is shifted in the impedance diagram by the polarization quantity $k \cdot \underline{Z}_{S1} = k \cdot \underline{E}_1 / \underline{I}_1$. The upper zenith is still defined by the setting value Z_r. For the fault location F_1 (Figure 2-32a), the short-circuit is in the forward direction and the source impedance is in the reverse direction. All fault locations right up to the device mounting location (current transformers) are clearly inside the MHO characteristic (Figure 2-32b). If the current is reversed, the zenith of the circle diameter changes abruptly (Figure 2-32c). A reversed current $\underline{I}_2$ which is determined by the source impedance $\underline{Z}_{S2} + \underline{Z}_L$ now flows via the measuring location (current transformer) . The zenith Z_r remains unchanged; it now is the lower boundary of the circle diameter. In conjunction with load transport via the line, the zenith vector may additionally be rotated by the load angle.

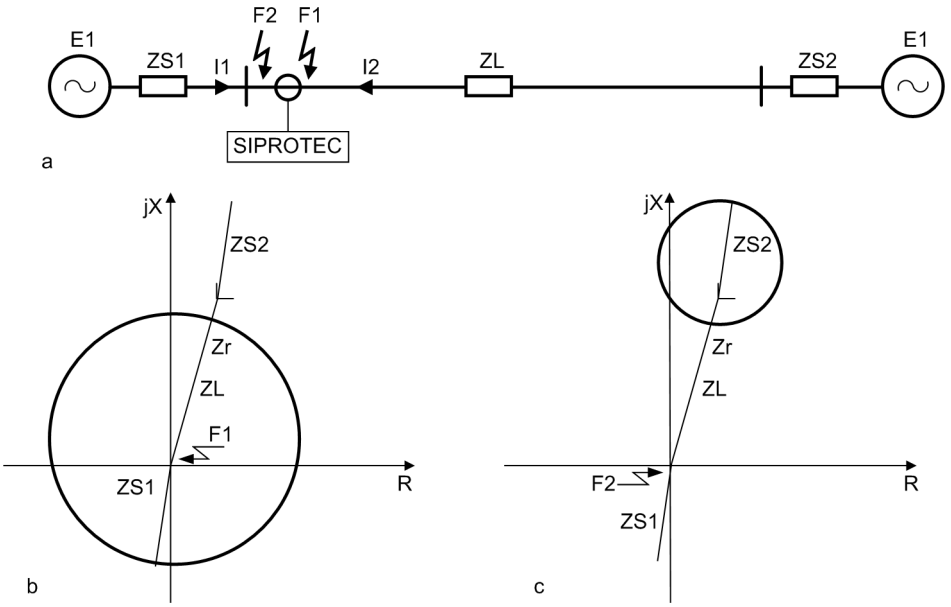

Figure 2-32 Polarized MHO characteristic with quadrature or memorized voltages

Selecting Polarization

Incorrect directional decisions may be reached with short lines resulting in tripping or blocking in spite of a reverse fault. This occurs because their zone reach is set very small. Therefore their loop voltages are also very small, resulting in the phase angle comparison between difference voltage and loop voltage being insufficiently accurate. If phase angle comparison is performed using a polarization voltage consisting of a loop voltage component recorded before the fault and a component of the current loop voltage, these problems may be avoided. The following equation shows the polarization voltage $\underline{U}_P$ for a Ph-E loop:

$$\underline{U}_P = (1 - k_{Pre}) \cdot \underline{U}_{L\text{-}E} + k_{Pre} \cdot \underline{U}_{Ph\text{-}EMemorized}$$

The evaluation (factor k_{Pre}) of the prefault voltage may be set separately for Ph-E and Ph-Ph loops. In general the factor is set to 15 %. The memory polarization is only performed if the RMS value of the corresponding memorized voltage for Ph-E loops is greater than a 40 % of the nominal voltage U_N (address 204) and greater than a 70 % of U_N for Ph-Ph loops.

If there is no prefault voltage due to a sequential fault or energization onto a fault, the memorized voltage can only be used for a limited time for reasons of accuracy. For single-pole faults and two-pole faults without earth path component, a voltage which is not involved in the fault may be used for polarisation. This voltage is rotated by 90° in comparison with the fault-accurate voltage (cross polarization). The polarisation voltage $\underline{U}_P$ is a mixed voltage which consists of the valid voltage and the corresponding unfaulted voltages. The following equation shows the polarization voltage $\underline{U}_P$ for a Ph-E loop:

$$\underline{U}_P = (1 - k_{Cross}) \cdot \underline{U}_{L\text{-}E} + k_{Cross} \cdot \underline{U}_{L\text{-}EUnfaulted}$$

The cross polarisation is used if no memorized voltage is available. The evaluation (factor k_{Cross}) of the voltage may be set separately for Ph-E and Ph-Ph loops. In general the factor is set to 15 %.

Note

When switching onto a three-pole fault with the MHO characteristic, there is no memory voltage or unfaulted loop voltage available. To ensure fault clearance when switching onto three-pole close-up faults, please make sure that in conjunction with the configured MHO characteristic the instantaneous tripping function is always enabled.

Determination of direction in case of series-compensated lines

If a short-circuit occurs behind the local series capacitor, the short-circuit voltage however is inverted until the protective spark gap PSG has picked up (see the following Figure).

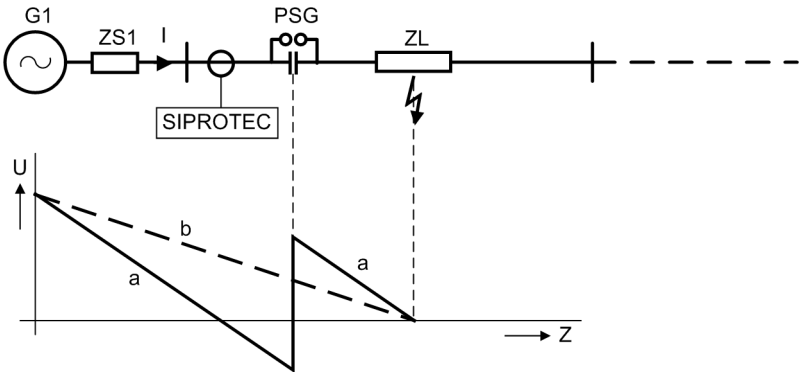

Figure 2-33 Voltage characteristic while a fault occurs after a series capacitor.

a) without pickup of the protective spark gap

b) with pickup of the protective spark gap

As the polarization voltage of the MHO characteristic consists of the currently measured voltage and the voltage measured before the occurrence of the fault, it is possible that the distance protection function would detect a wrong fault direction. To prevent spurious trippings or erroneous pickups, a memory voltage proportion of up to 80 % could be necessary. This, however, would lead to a considerable increase of the MHO characteristic. This increase is usually not acceptable.

Therefore an additional measurement with exclusively memorized voltage is performed for applications with series compensation. This ensures a correct direction measurement at any time (see Figure 2-34) and the MHO distance zones are not increased more than necessary.

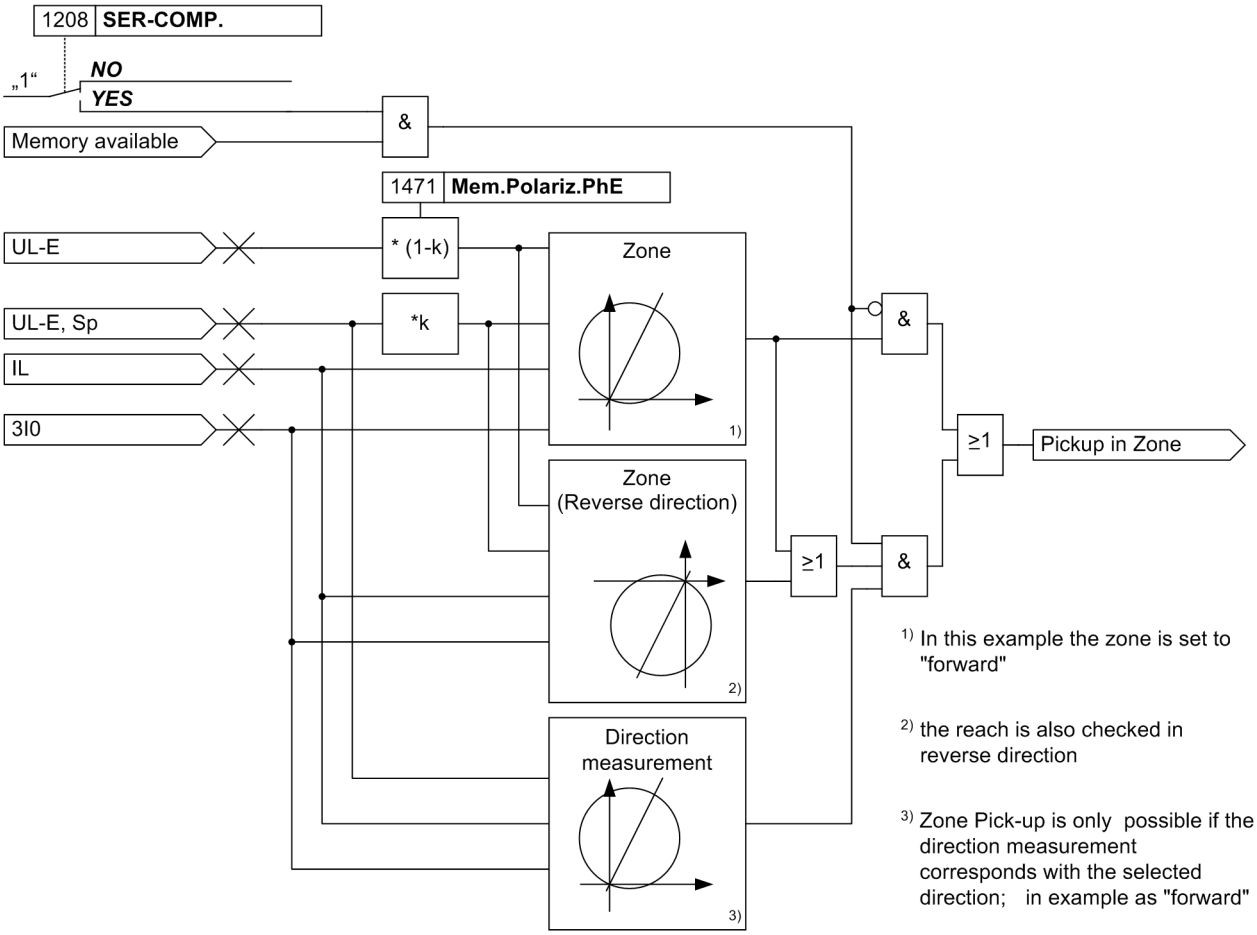

Figure 2-34 Use of the MHO characteristic for series compensated lines

The direction measurement is performed at 100 % by means of memorized voltage. A zone pickup is only possible if this measurement confirms that the direction of the short-circuit corresponds to the parameterized direction of the zone.

The distance measurement itself is performed by means of the usual polarization voltage U_P and is performed in the forward direction as well as in the reverse direction. This ensures a pickup even in cases in which the series capacitor usually causes the inversion of the direction result.

Assignment to tripping zones and zone pickup

The assignment of measured values to the tripping zones of the MHO characteristic is done for each zone by determining the angles between two difference phasors ΔZ_1 and ΔZ_2 (Figure 2-35). These phasors result from the difference between the two zeniths of the circle diameter and the fault impedance. The zenith $\underline{Z}_r$ corresponds to the set value for the zone under consideration (Z_r and φ_{MHO} as shown in Figure 2-30), the zenith $k \cdot \underline{Z}_V$ corresponds to the polarization magnitude. Therefore the difference phasors are

$$\Delta \underline{Z}_1 = \underline{Z}_F - \underline{Z}_r$$

$$\Delta \underline{Z}_2 = \underline{Z}_F - k \cdot \underline{Z}_S$$

In the limiting case, $\underline{Z}_F$ is located on the perimeter of the circle. In this case the angle between the two difference phasors is 90° (Thales-theorem). Inside the characteristic the angle is greater than 90° and outside the circle it is less than 90°.

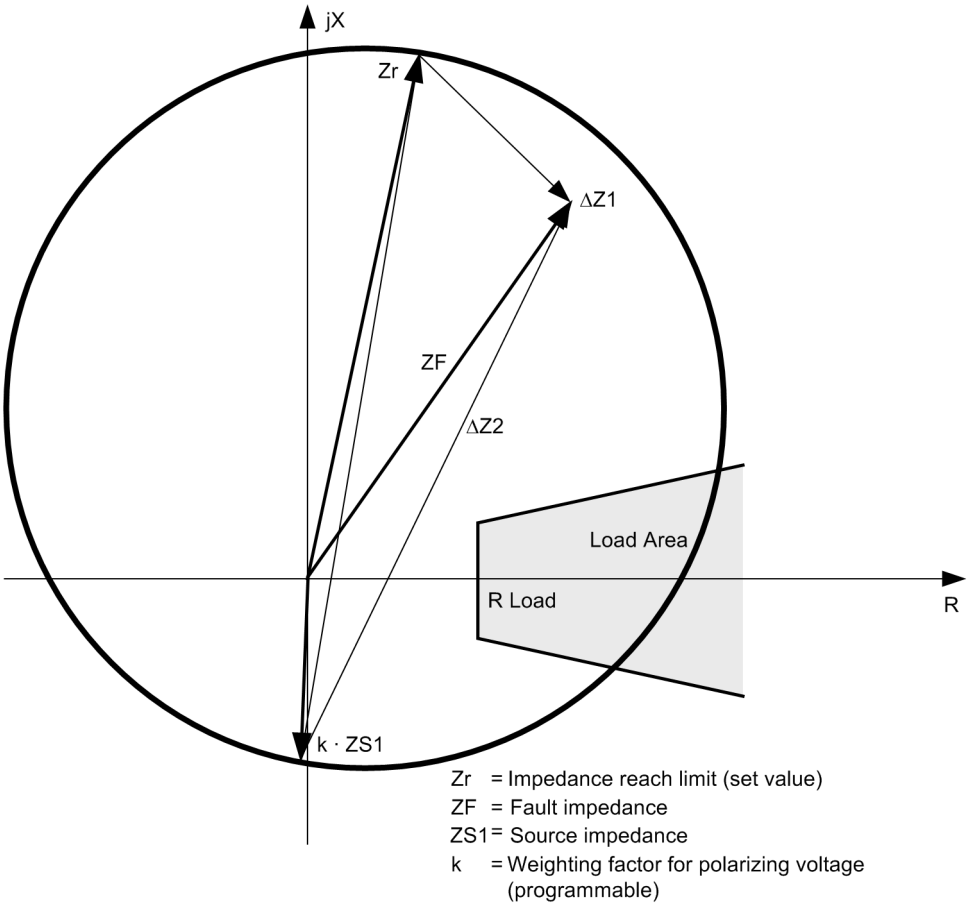

Figure 2-35 Phasor diagram of the MHO characteristic measured values

For each distance zone an MHO characteristic can be defined by means of the parameter Z_r. For each zone it may also be determined whether it operates **forwards** or **reverse**. In reverse direction the MHO characteristic is mirrored in the origin of the coordinate system. As soon as the fault impedance of any loop is confidently measured inside the MHO characteristic of a distance zone, the affected loop is designated as „picked up“. The loop information is also converted to phase-segregated information. Another condition for pickup is that the distance protection may not be blocked or switched off completely. Figure 2-36 shows these conditions.

The zones and phases of such a valid pickup, e.g. „Dis. Z1 L1“ for zone Z1 and phase L1 are processed by the zone logic and the supplementary functions (e.g. teleprotection logic).

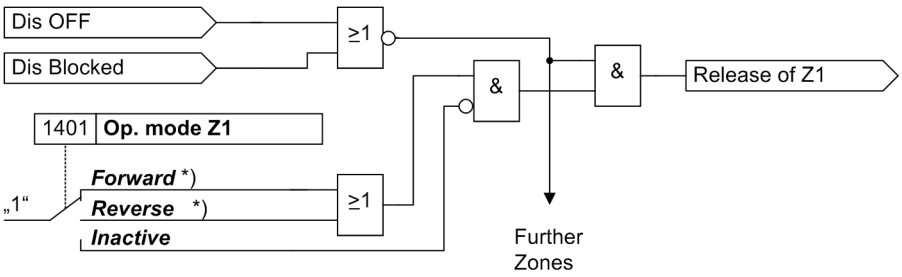

Figure 2-36 Release logic of a zone (example for Z1)

*) **forward** and **reverse** only affect the measured quantities and not the logic

In total, the following zones are available:

Independent zones:

- 1st zone (fast tripping zone) Z1 with **ZR(Z1)**; may be delayed with **T1-1phase** or **T1-multi-phase**,
- 2nd zone (backup zone) Z2 with **ZR(Z2)**; may be delayed with **T2-1phase** or **T2-multi-phase**,
- 3rd zone (backup zone) Z3 with **ZR(Z3)**; may be delayed with **T3 DELAY**,
- 4th zone (backup zone) Z4 with **ZR(Z4)**; may be delayed with **T4 DELAY**,
- 5th Zone (backup zone) Z5 with **ZR(Z5)**; may be delayed with **T5 DELAY**
- 6th Zone (backup zone) Z6 with **ZR(Z6)**; may be delayed with **T6 DELAY**

Dependent (controlled) zone:

- Overreaching zone Z1B with **ZR(Z1B)**; may be delayed with **T1B-1phase** or **T1B-multi-phase**.

2.2.3.2 Setting Notes

General

The function parameters for the MHO characteristic only apply if during the configuration of the scope of functions the MHO characteristic was selected for phase-to-phase measurement (address 112) and/or phase-to-earth measurement (address 113).

Grading coordination chart

It is recommended to initially create a grading coordination chart for the entire galvanically interconnected system. This diagram should reflect the line lengths with their primary impedances Z in Ω/km. For the reach of the distance zones, the impedances Z are the deciding quantities.

The first zone Z1 is usually set to cover 85% of the protected line without any trip time delay (i.e. T1 = 0.00 s). The protection clears faults in this range without additional time delay, i.e. the tripping time is the relay basic operating time.

The tripping time of the higher zones is sequentially increased by one time grading interval. The grading margin must take into account the circuit breaker operating time including the spread of this time, the resetting time of the protection equipment as well as the spread of the protection delay timers. Typical values are 0.2 s to 0.4 s. The reach is selected to cover up to approximately 80 % of the zone with the same set time delay on the shortest neighbouring feeder (Figure 2-26).

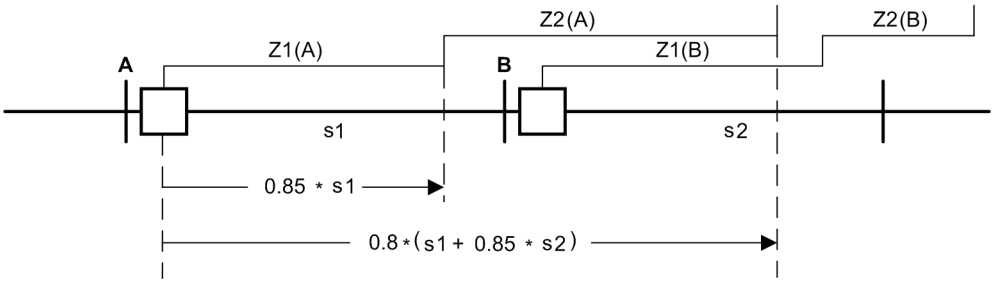

Figure 2-37 Setting the reach - example for device A

s1, s2 Protected line section

When using a personal computer and DIGSI to apply the settings, these can be optionally entered as primary or secondary values.

In the case of parameterization with secondary quantities, the values derived from the grading coordination chart must be converted to the secondary side of the current and voltage transformers. In general:

$$Z_{secondary} = \frac{\text{Current Transformer Ratio}}{\text{Voltage Transformer Ratio}} \cdot Z_{primary}$$

Accordingly, the reach for any distance zone can be specified as follows:

$$Z_{sec} = \frac{N_{CT}}{N_{VT}} \cdot Z_{prim}$$

with

N_{CT} = Current transformer ratio

N_{VT} = Transformation ratio of voltage transformers

On long, heavily loaded lines, the MHO characteristic may extend into the load impedance range. This is of no consequence as the pickup by overload is prevented by the load trapezoid. Refer to margin heading „Load Area“ in Section 2.2.1.

Calculation Example:

110 kV overhead line 150 mm^2 with the following data:

s (length) = 35 km

R_1/s = 0.19 Ω/km

X_1/s = 0.42 Ω/km

R_0/s = 0.53 Ω/km

X_0/s = 1.19 Ω/km

Current Transformer 600 A / 5 A

Voltage Transformer 110 kV / 0.1 kV

The following line data is calculated:

R_L = 0.19 Ω/km · 35 km = 6.65 Ω

X_L = 0.42 Ω/km · 35 km = 14.70 Ω

For the first zone, a setting of 85 % of the line length should be applied, which results in primary:

$X1_{prim}$ = 0.85 · X_L = 0.85 · 14.70 Ω= 12.49 Ω

or secondary:

$$X1_{sec} = \frac{N_{CT}}{N_{VT}} \cdot X1_{prim} = \frac{600\ A / 5\ A}{110\ kV / 0.1\ kV} \cdot 12.49\ \Omega = 1.36\ \Omega$$

Independent Zones Z1 up to Z6

With the parameter MODE ***Forward*** or ***Reverse***, each zone can be set (address 1401 **Op. mode Z1**, 1411 **Op. mode Z2**, 1421 **Op. mode Z3**, 1431 **Op. mode Z4**, 1441 **Op. mode Z5** and 1461 **Op. mode Z6**). This allows any combination of forward or reverse graded zones. Zones that are not required are set ***Inactive***.

The values derived from the grading coordination chart are set for each of the required zones. The setting parameters are grouped for each zone. For the first zone these are the parameters **ZR(Z1)** (address 1402) specifying the impedance of the upper zenith of the MHO characteristic from the origin (reach), as well as the relevant delay time settings.

Different delay times can be set for single- and multiple-phase faults in the first zone: **T1-1phase** (Address 1305) and **T1-multi-phase** (address 1306). The first zone is normally set to operate without additional time delay.

For the remaining zones the following correspondingly applies:

ZR(Z2) (address 1412)

ZR(Z3) (address 1422)

ZR(Z4) (address 1432)

ZR(Z5) (address 1442)

ZR(Z6) (address 1462)

For the second zone it is also possible to set separate delay times for single-phase and multi-phase faults. In general the delay times are set the same. If stability problems are expected during multi-phase faults, a shorter delay time could be considered for **T2-multi-phase** (address 1316) while tolerating a longer delay time for single-phase faults with **T2-1phase** (address 1315).

The zone timers for the remaining zones are set with the parameters **T3 DELAY** (address 1325), **T4 DELAY** (address 1335), **T5 DELAY** (address 1345), and **T6 DELAY** (address 1365).

If the device is provided with the capability to trip single-pole, single-pole tripping is then possible in the zones Z1 and Z2. While single-pole tripping usually applies to single-phase faults in Z1 (if the remaining conditions for single-pole tripping are satisfied), this may also be selected for the second zone with address 1317 **Trip 1pole Z2**. Single pole tripping in zone 2 is only possible if this address is set to ***Yes***. The default setting is ***No***.

Note

For instantaneous tripping (undelayed) in the forward direction, the first zone **Z1** should always be used, as only the Z1 and Z1B are guaranteed to trip with the shortest operating time of the device. The further zones should be used sequentially for grading in the forward direction.

If instantaneous tripping (undelayed) is required in the reverse direction, the zone **Z3** should be used for this purpose, as only this zone ensures instantaneous pickup with the shortest device operating time for faults in the reverse direction. This setting is also recommended in teleprotection ***BLOCKING*** schemes.

With the binary input indications No. 3619 „>BLOCK Z4 Ph-E“, No. 3620 „>BLOCK Z5 Ph-E“, and No. 3622 „>BLOCK Z6 Ph-E“, the zones Z4, Z5, and Z6 for phase-to-earth loops may be blocked. To block these zones permanently for phase-to-earth loops, these binary input indications must be set permanently to the logic value of 1 via CFC.

Controlled zone Z1B

The overreaching zone Z1B is a controlled zone. It does not influence the normal zones Z1 to Z6. There is no zone switching, but rather the overreaching zone is activated or deactivated by the corresponding criteria. It can also be set in address 1451 **Op. mode Z1B** to ***Forward*** or ***Reverse***. If this stage is not required, it is set to ***Inactive*** (address 1451). The setting options are similar to those of zone Z1: Address 1452 **ZR(Z1B)**. The delay times for single-phase and multiple-phase faults can again be set separately: **T1B-1phase** (address 1355) and **T1B-multi-phase** (address 1356).

Zone Z1B is often used in combination with automatic reclosure and/or teleprotection schemes. It can be activated internally by the teleprotection functions (see also Section 2.6) or the integrated automatic reclosure (if available, see also Section 2.13), or externally by a binary input. It is generally set to at least 120 % of the line length. On three-terminal lines („teed feeders"), it must be set to securely reach beyond the longest line section, even when there is additional infeed via the tee-off point. The delay times are set in accordance with the type of application, usually to zero or a very small delay. When used in conjunction with teleprotection comparison schemes, the dependence on the fault detection must be considered (refer to margin heading „Distance Protection Prerequisites" in Section 2.6.10.

If the distance protection is used in conjunction with the internal or an automatic recloser, it may be determined in address 1357 **1st AR -> Z1B** which distance zone is released prior to starting the AR. Usually the overreaching zone Z1B is used for the first cycle (**1st AR -> Z1B** = ***YES***). This may be suppressed by changing the setting of **1st AR -> Z1B** to ***NO***. In this case, overreaching zone Z1B is not released before and during the first automatic reclose cycle. Zone Z1 is always released. When using an external automatic reclose device, the setting only has an effect if the readiness of the automatic recloser is signalled via binary input „>Enable ARzones" (No. 383).

Polarization

The degree of polarization with a fault-accurate memory voltage can be set in address 1471 **Mem.Polariz.PhE** for phase-to-earth loops, and in address 1473 **Mem.Polariz.P-P** for phase-to-phane loops. For polarization with an unfaulted valid voltage (cross-polarization), the evaluation factor can be set separately for phase-to-earth and phase-to-phase loops under address 1472 **CrossPolarizPhE** and 1474 **CrossPolarizP-P**. This setting can only be changed using DIGSI at **Additional Settings**.

These parameters have an impact on the expansion of the characteristics dependent on the source impedance. If these parameters are set to zero, the basic characteristic is displayed without any expansion.

Minimum Current of Zone Z1

In earthed systems with parallel lines without zero-sequence system infeed at the opposite line end, it may be necessary to allow a tripping of Z1 only when exceeding an increased phase current threshold. For this purpose, you can define a separate minimum current for the zone Z1 in address 1308 **Iph>(Z1)**. A pickup of zone Z1 is only possible if the phase currents have exceeded this threshold value. This parameter is only available if address 119 **Iph>(Z1)** is set to ***Enabled***.

2.2.3.3 Settings

Addresses which have an appended "A" can only be changed with DIGSI, under Additional Settings.

The table indicates region-specific presettings. Column C (configuration) indicates the corresponding secondary nominal current of the current transformer.

Addr.	Parameter	C	Setting Options	Default Setting	Comments
1305	T1-1phase		0.00 .. 30.00 sec; ∞	0.00 sec	T1-1phase, delay for single phase faults
1306	T1-multi-phase		0.00 .. 30.00 sec; ∞	0.00 sec	T1multi-ph, delay for multi phase faults
1308	Iph>(Z1)	1A	0.05 .. 20.00 A	0.20 A	Minimum current for Z1 only Iph>(Z1)
		5A	0.25 .. 100.00 A	1.00 A	
1315	T2-1phase		0.00 .. 30.00 sec; ∞	0.30 sec	T2-1phase, delay for single phase faults
1316	T2-multi-phase		0.00 .. 30.00 sec; ∞	0.30 sec	T2multi-ph, delay for multi phase faults
1317A	Trip 1pole Z2		NO YES	NO	Single pole trip for faults in Z2
1325	T3 DELAY		0.00 .. 30.00 sec; ∞	0.60 sec	T3 delay
1335	T4 DELAY		0.00 .. 30.00 sec; ∞	0.90 sec	T4 delay
1345	T5 DELAY		0.00 .. 30.00 sec; ∞	0.90 sec	T5 delay
1355	T1B-1phase		0.00 .. 30.00 sec; ∞	0.00 sec	T1B-1phase, delay for single ph. faults
1356	T1B-multi-phase		0.00 .. 30.00 sec; ∞	0.00 sec	T1B-multi-ph, delay for multi ph. faults
1357	1st AR -> Z1B		NO YES	YES	Z1B enabled before 1st AR (int. or ext.)
1365	T6 DELAY		0.00 .. 30.00 sec; ∞	1.50 sec	T6 delay
1401	Op. mode Z1		Forward Reverse Inactive	Forward	Operating mode Z1
1402	ZR(Z1)	1A	0.050 .. 200.000 Ω	2.500 Ω	ZR(Z1), Impedance Reach
		5A	0.010 .. 40.000 Ω	0.500 Ω	
1411	Op. mode Z2		Forward Reverse Inactive	Forward	Operating mode Z2
1412	ZR(Z2)	1A	0.050 .. 200.000 Ω	5.000 Ω	ZR(Z2), Impedance Reach
		5A	0.010 .. 40.000 Ω	1.000 Ω	
1421	Op. mode Z3		Forward Reverse Inactive	Reverse	Operating mode Z3
1422	ZR(Z3)	1A	0.050 .. 200.000 Ω	5.000 Ω	ZR(Z3), Impedance Reach
		5A	0.010 .. 40.000 Ω	1.000 Ω	

Addr.	Parameter	C	Setting Options	Default Setting	Comments
1431	Op. mode Z4		Forward Reverse Inactive	Forward	Operating mode Z4
1432	ZR(Z4)	1A	0.050 .. 200.000 Ω	10.000 Ω	ZR(Z4), Impedance Reach
		5A	0.010 .. 40.000 Ω	2.000 Ω	
1441	Op. mode Z5		Forward Reverse Inactive	Inactive	Operating mode Z5
1442	ZR(Z5)	1A	0.050 .. 200.000 Ω	10.000 Ω	ZR(Z5), Impedance Reach
		5A	0.010 .. 40.000 Ω	2.000 Ω	
1451	Op. mode Z1B		Forward Reverse Inactive	Forward	Operating mode Z1B (extended zone)
1452	ZR(Z1B)	1A	0.050 .. 200.000 Ω	3.000 Ω	ZR(Z1B), Impedance Reach
		5A	0.010 .. 40.000 Ω	0.600 Ω	
1461	Op. mode Z6		Forward Reverse Inactive	Inactive	Operating mode Z6
1462	ZR(Z6)	1A	0.050 .. 200.000 Ω	15.000 Ω	ZR(Z6), Impedance Reach
		5A	0.010 .. 40.000 Ω	3.000 Ω	
1471A	Mem.Polariz.PhE		0.0 .. 100.0 %	15.0 %	Voltage Memory polarization (phase-e)
1472A	CrossPolarizPhE		0.0 .. 100.0 %	15.0 %	Cross polarization (phase-e)
1473A	Mem.Polariz.P-P		0.0 .. 100.0 %	15.0 %	Voltage Memory polarization (ph-ph)
1474A	CrossPolarizP-P		0.0 .. 100.0 %	15.0 %	Cross polarization (phase-phase)

2.2.4 Tripping Logic of the Distance Protection

2.2.4.1 Functional Description

General Device Pickup

As soon as any one of the distance zones has determined with certainty that the fault is inside its tripping range, the signal „Dis. PICKUP“ (general fault detection of the distance protection) is generated. This signal is alarmed and made available for the initialization of internal and external supplementary functions. (e.g. teleprotection signal transmission, automatic reclosure).

Zone logic of the independent zones Z1 up to Z6

As was mentioned in the description of the measuring methods, each distance zone generates an output signal which is associated with the zone and the affected phase. The zone logic combines these zone fault detections with possible further internal and external signals. The delay times for the distance zones can be started either all together on general fault detection by the distance protection function, or individually at the moment the fault

enters the respective distance zone. Parameter **Start Timers** (address 1210) is set by default to ***on Dis. Pickup***. This setting ensures that all delay times continue to run together even if the type of fault or the selected measuring loop changes, e.g. because an intermediate infeed is switched off. It is also the preferred setting if other distance protection relays in the power system are working with this start timing. Where grading of the delay times is especially important, for instance if the fault location shifts from zone Z3 to zone Z2, the setting ***on Zone Pickup*** should be chosen. The simplified zone logic is shown in Figure 2-38 for zone 1, Figure 2-39 for zone 2 and Figure 2-40 for zone 3. Zones Z4, Z5 and Z6 function according to Figure 2-41.

In the case of zones Z1, Z2 and Z1B single-pole tripping is possible for single-phase faults if the device version includes the single-pole tripping option. Therefore the event output in these cases is provided for each pole. Different trip delay times can be set for single-phase and multiple-phase faults in these zones. In further zones, the tripping is always three-pole.

Note

The binary input „>1p Trip Perm“ (No. 381) must be activated to enable single-pole tripping. The internal automatic reclosure function may also grant the single-pole permission. The binary input is usually controlled from an external automatic reclosure device.

The trip delay times of the zones can be bypassed. The grading times are started either via zone pickup or general pickup of the distance protection function. The undelayed release results from the line energization logic. This logic may be externally initiated via the circuit breaker close signal derived from the circuit breaker control switch or from an internal line energization detection. Zones Z4, Z5 and Z6 may be blocked by external criteria (no. 3617 „>BLOCK Z4-Trip“, no. 3618 „>BLOCK Z5-Trip“, no. 3621 „>BLOCK Z6-Trip“).

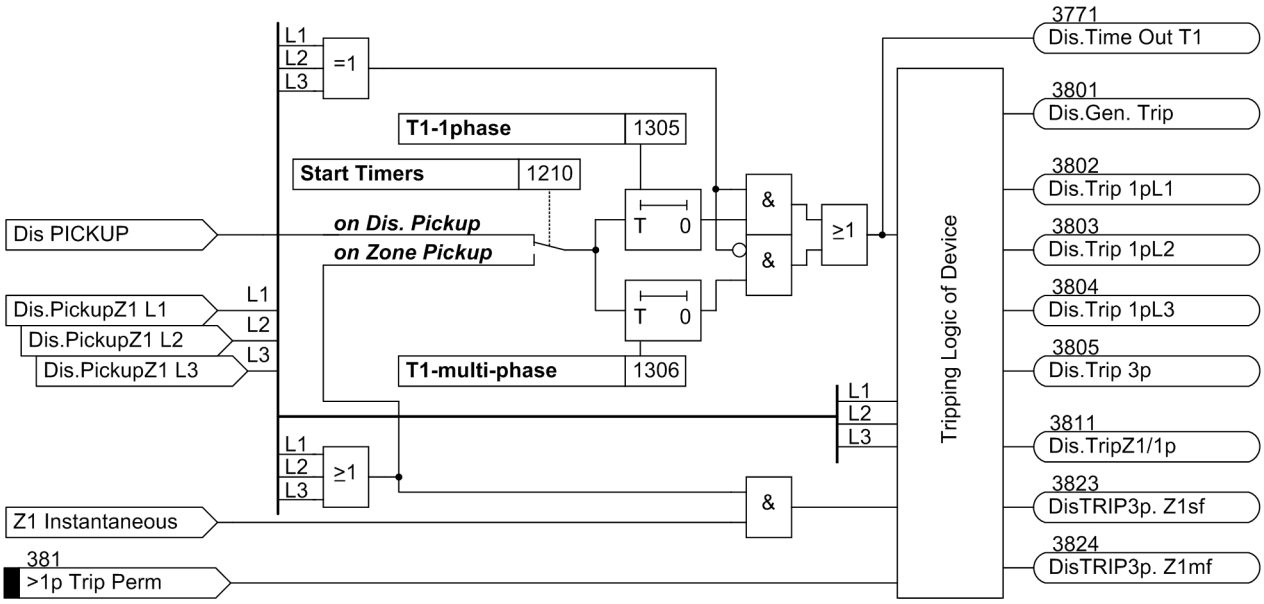

Figure 2-38 Tripping logic for the 1st zone

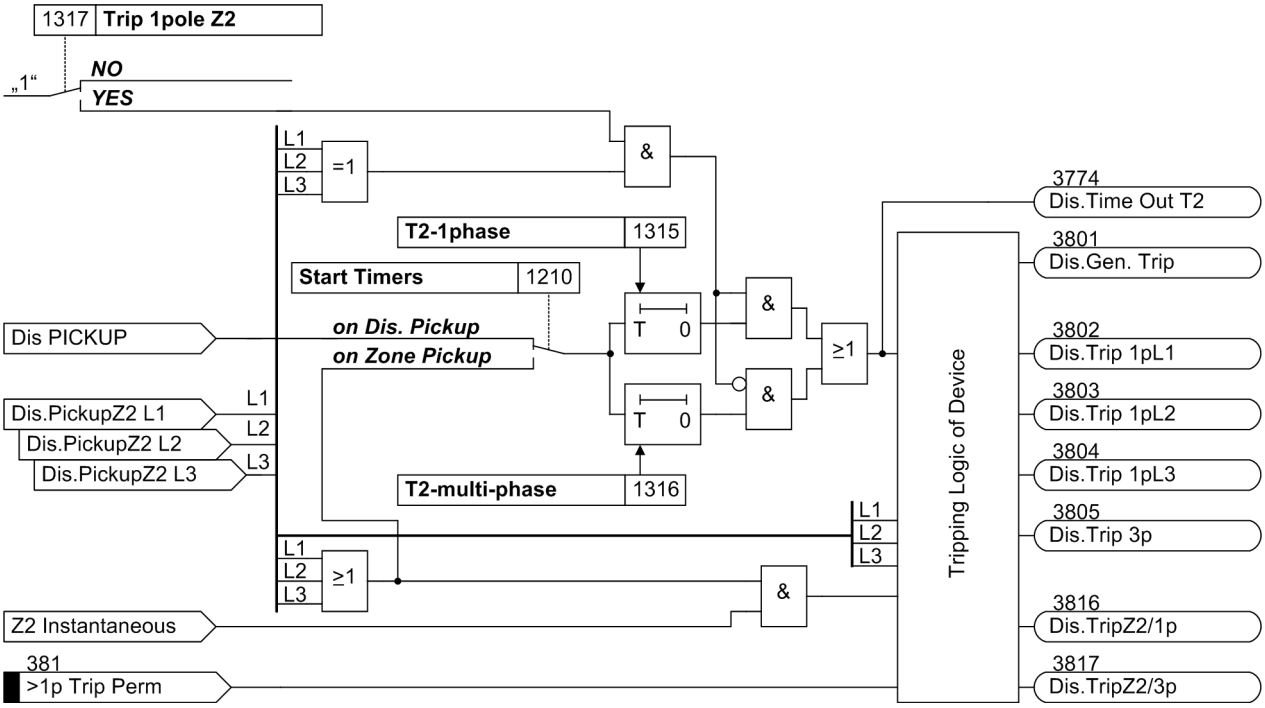

Figure 2-39 Tripping logic for the 2nd zone

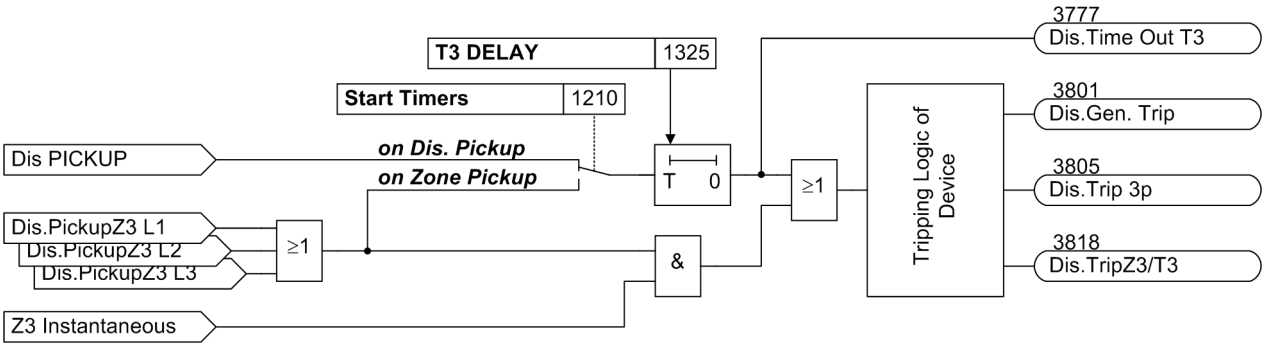

Figure 2-40 Tripping logic for the 3rd zone

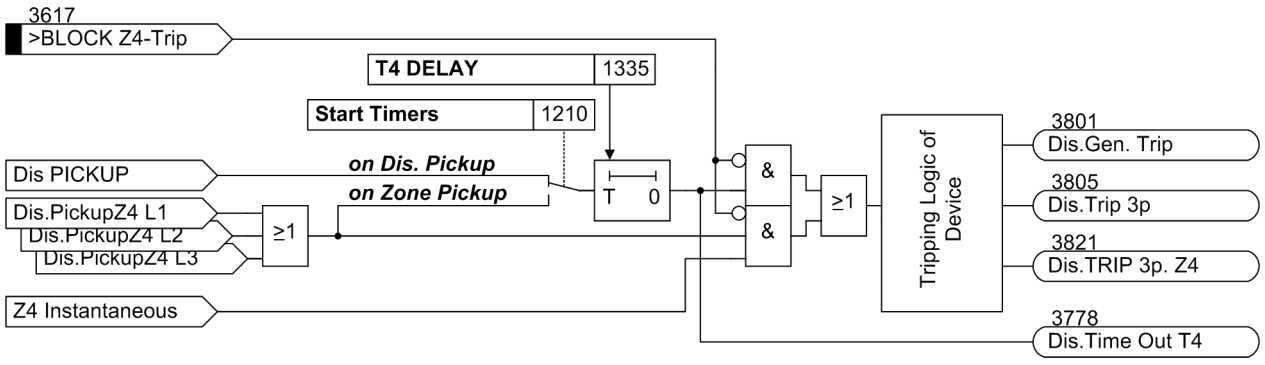

Figure 2-41 Tripping logic for the 4th, 5th, and 6th zone, shown for Z4

Zone logic of the controlled zone Z1B

The controlled zone Z1B is usually applied as an overreaching zone. The logic is shown in Figure 2-42. It may be activated via various internal and external functions. The binary inputs for external activation of Z1B of the distance protection are „>ENABLE Z1B“ and „>Enable ARzones“. The former can, for example, be from an external teleprotection device, and only affects Z1B of the distance protection. The latter can also be controlled, e.g. by an external automatic reclosure device. In addition, it is possible to use zone Z1B as a rapid autoclosure stage that only operates for single-pole faults, for example, if only single-pole automatic reclose cycles are to be executed.

It is possible for the 7SA522 to trip single-pole during two-phase faults without earth connection in the overreaching zone when single-pole automatic reclosure is used.

As the device features an integrated teleprotection function, release signals from this function may activate zone Z1B provided that the internal teleprotection signal transmission function has been configured to one of the available schemes with parameter 121 **Teleprot. Dist.**, i.e., the function has not been set to ***Disabled***). If the integrated AR function is activated, zone Z1B can be released in the first AR cycle provided that parameter 1357 **1st AR -> Z1B** is set accordingly.

If the distance protection is operated with one of the teleprotection schemes described in 2.6, the signal transmission logic controls the overreaching zone, i.e. it determines whether a non-delayed trip (or delayed with T1B) is permitted in the event of faults in the overreaching zone (i.e. up to the reach limit of zone Z1B) at both line ends. Whether the automatic reclosure device is ready for reclosure or not is irrelevant since the teleprotection function ensures the selectivity over 100% of the line length and fast tripping.

If, however, the signal transmission is switched off or the transmission path is disturbed, the internal automatic reclosure circuit can determine whether the overreaching zone (Z1B in the distance protection) is released for fast tripping. If no reclosure is expected (e.g. circuit breaker not ready) the normal grading of the distance protection (i.e. fast tripping only for faults in zone Z1) must apply to retain selectivity.

Fast tripping before reclosure is also possible with multiple reclosures. Appropriate links between the output signals (e.g. 2nd reclosure ready: 2890, „AR 2.CycZoneRel“) and the inputs for enabling/releasing non-delayed tripping of the protection functions can be established via the binary inputs and outputs (383, „>Enable ARzones“) or the integrated user-definable logic functions (CFC).

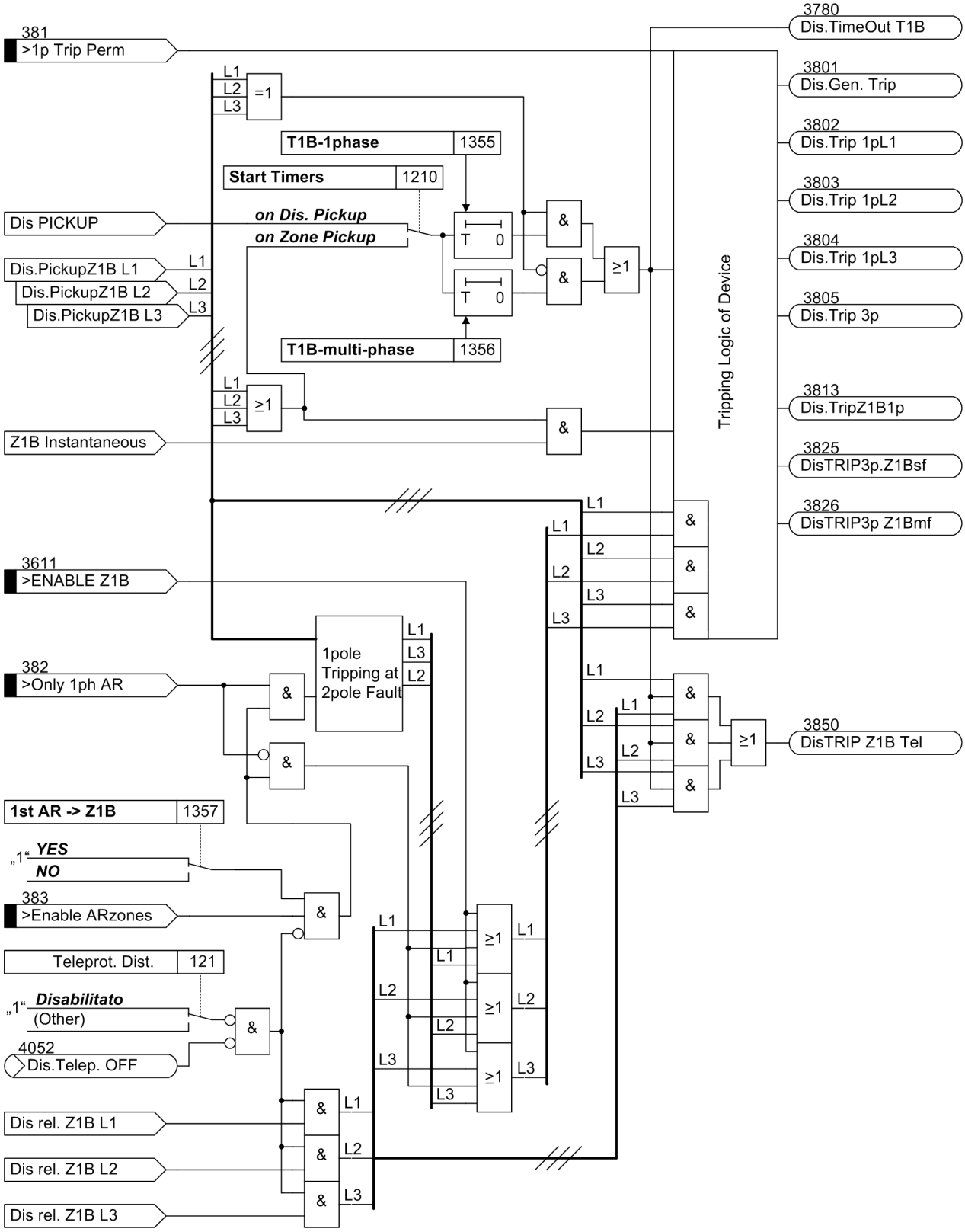

Figure 2-42 Tripping logic for the controlled zone Z1B

Tripping logic

In the actual tripping logic, the output signals generated by the individual zones are combined to form the output signals „Dis.Gen. Trip“, „Dis.Trip 1pL1“, „Dis.Trip 1pL2“, „Dis.Trip 1pL3“, „Dis.Trip 3p“. The single-pole information implies that only a single-pole tripping will take place. Furthermore, the zone that initiated the tripping is identified; if single-pole tripping is possible, this is also signalled as shown in the zone logic diagrams (Figures 2-38 to 2-42). The actual generation of the commands for the tripping (output) relay is executed within the tripping logic of the entire device.

2.2.4.2 Setting Notes

The trip delay times of the distance stages and intervention options which are also processed in the tripping logic of the distance protection were already considered with the zone settings.

Further setting options which affect the tripping are described as part of the tripping logic of the device.

2.3 Power swing detection (optional)

The 7SA522 has an integrated power swing supplement which allows both the blocking of trips by the distance protection during power swings (power swing blocking) and the tripping during unstable power swings (out-of-step tripping). To avoid uncontrolled tripping, the distance protection devices are supplemented with power swing blocking functions. At particular locations in the system, out-of-step tripping devices are also applied to split the system into islanded networks at selected locations, when system stability (synchronism) is lost due to severe (unstable) power swings.

2.3.1 General

Following dynamic events such as load jumps, faults, reclose dead times or switching actions it is possible that the generators must realign themselves, in an oscillatory manner, with the new load balance of the system. The distance protection registers large transient currents during the power swing and, especially at the electrical centre, small voltages (Figure 2-43). Small voltages with simultaneous large currents apparently imply small impedances, which again could lead to tripping by the distance protection. In expansive networks with large transferred power, even the stability of the energy transfer could be endangered by such power swings.

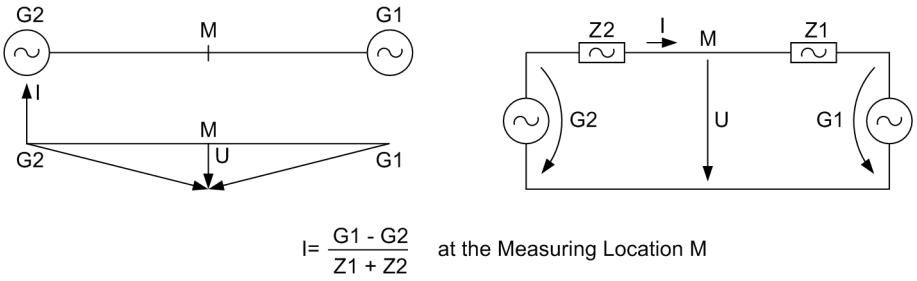

Figure 2-43 Measured quantities during a power swing

System power swings are three-phase symmetrical processes. Therefore a certain degree of measured value symmetry may be assumed in general. System power swings may, however, also occur during asymmetrical processes, e.g. after faults or during a single-pole dead time. Thus the power swing detection in the 7SA522 is based on three measuring systems. For each phase, there is a measuring system that ensures phase-selective power swing detection. In case of faults, the detected power swing is terminated in the corresponding phases, which enables selective tripping of the distance protection.

2.3.2 Method of Operation

To detect a power swing, the rate of change of the impedance vectors is measured.

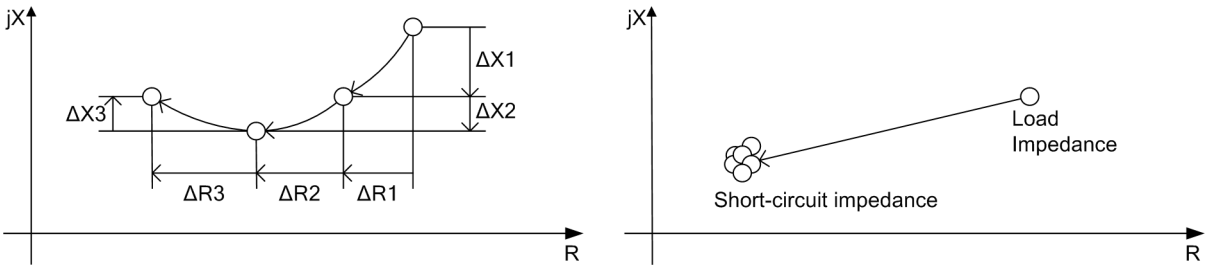

Figure 2-44 Impedance vectors during a power swing and during a fault

To ensure stable and secure operation of the power swing detection without the risk of an overfunction of the power swing detection during a fault, the following measuring criteria are used:

- **Trajectory monotony**:

  During a power swing, the measured impedance features a directional course of movement. This course of movement occurs exactly when not more than one of the two components ΔR and ΔX features a change of direction within one measuring window. A fault usually causes a change of direction in ΔR as well as in ΔX within one measuring window.

- **Trajectory continuity**:

  During a power swing, the distance between two subsequent impedance values features a clear change in ΔR or ΔX. In case of a fault, the impedance vector jumps to the fault impedance without moving afterwards.

- **Trajectory uniformity**

  During a power swing, the ratio between two subsequent changes of ΔR or ΔX will not exceed a threshold. A fault usually causes an abrupt jump of the impedance vector from the load impedance to the fault impedance.

The indication of a power swing is triggered when the impedance vector enters the power swing measuring range PPOL (refer to Figure 2-45) and the criteria of power swing detection are met. The fault detection range APOL for the polygonal characteristic is made up of the largest quantitative values set for R and X of all active zones. The power swing area has a minimum distance Z_{Diff} of 5 Ω (at I_N = 1 A) or 1 Ω (at I_N = 5 A) in all directions from the fault detection zone. Analog features apply for the characteristics. The power swing circle also has a distance of 5 Ω (at II_N = 1 A) or 1 Ω (at II_N = 5 A) from the largest zone circle. The power swing measuring range has no load trapezoid cutout.

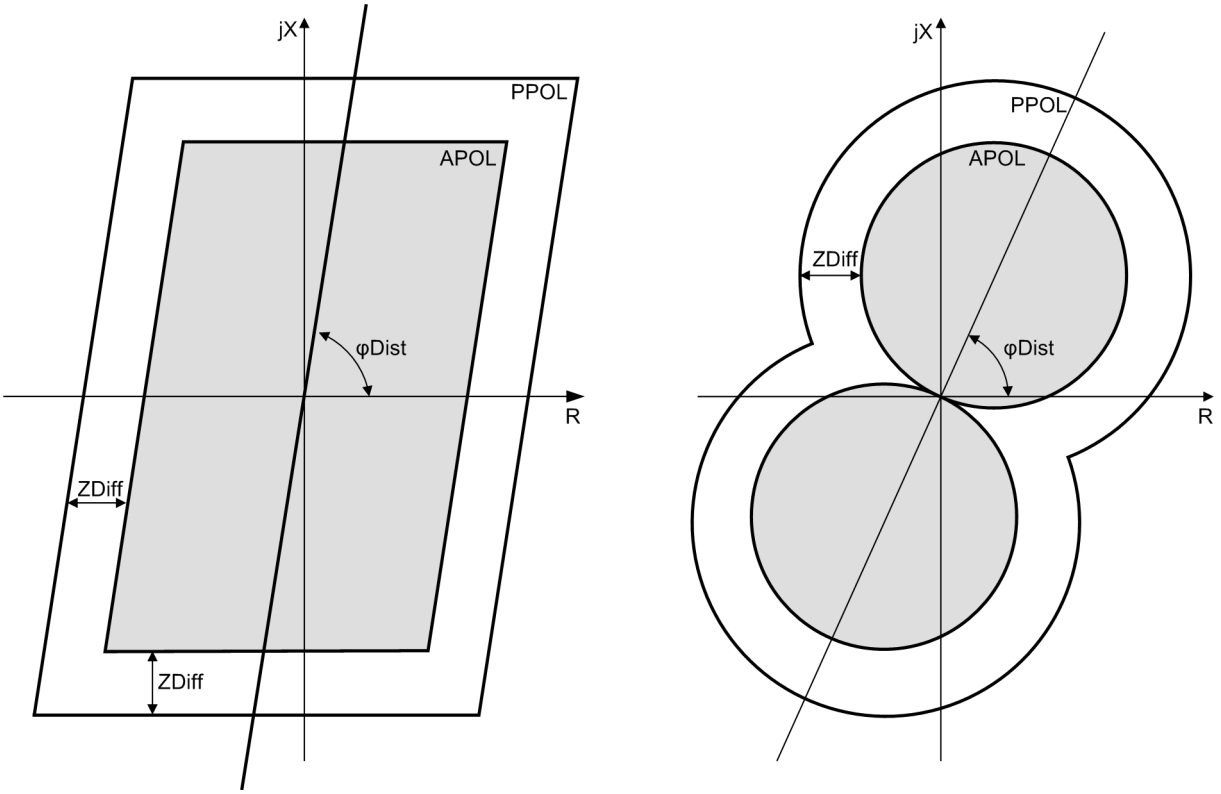

Figure 2-45 Operating range of the power swing detection for polygon and MHO characteristics

In Figure 2-45, a simplified logic diagram for the power swing function is given. This measurement is executed per phase. A power swing signal will be generated if the measured impedance is inside the power swing polygon (PPOL). The power swing signal remains active until a fault occurs or until the power swing has decayed. The power swing detection can be blocked via the binary input No. 4160 „>Pow. Swing BLK“.

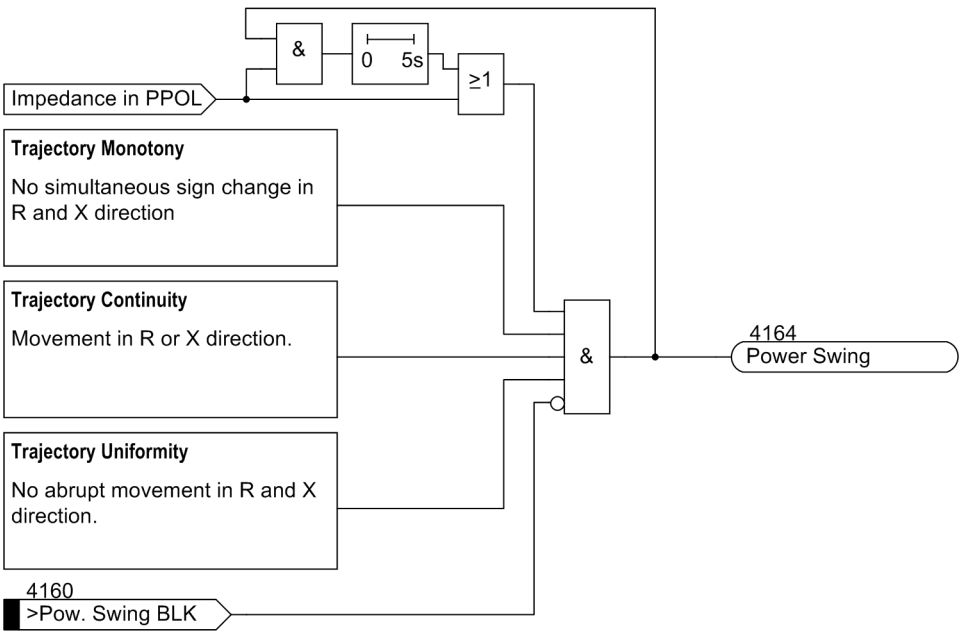

Figure 2-46 Logic diagram of power swing detection

Power Swing Blocking

The power swing blocking function blocks the tripping of the distance protection for specific zones (which are set under address 2002 **P/S Op. mode**) phase-selectively:

- Blocking of the trip command for all zones (***All zones block***): The trip command of the distance protection is blocked for all zones during a power swing.
- Blocking of the trip command for the first zone only (***Z1/Z1B block***): Only the trip command of the first zone and of the overreaching zone (Z1 and Z1B) are blocked during a power swing. A pickup in a different zone (Z2 and higher) can lead to a trip command in the case of a power swing after the associated grading time has expired.
- Blocking of the trip command for the higher zones only (***>= Z2 block***): Z2 and the higher zones are blocked for the tripping during a power swing. Only a pickup in the first zone or the overreach zone (Z1 and Z1B) can lead to a trip command.
- Blocking of the first two zones (***Z1,Z1B,Z2 block***): The trip commands of the first and second zone (Z1 and Z2) and the overreaching zone (Z1B) are blocked during a power swing. A pickup in a different zone (Z3 and higher) can lead to a trip command in the case of a power swing after the associated grading time has expired.

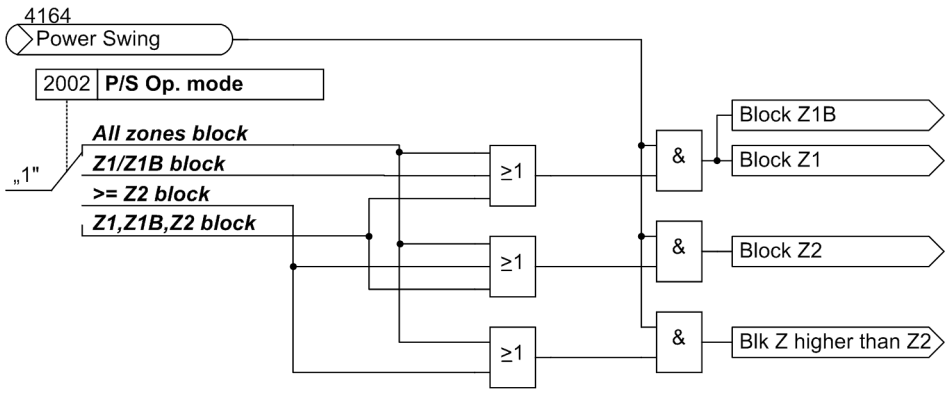

Figure 2-47 Blocking logic of the power swing supplement

Power Swing Tripping

If tripping in the event of an unstable power swing (out-of-step condition) is desired, the parameter **PowerSwing trip** (address 2006) = ***YES*** is set. If the criteria for power swing detection are met, the distance protection is initially blocked according to the configured program for power swing blocking, to avoid tripping by the distance protection.

When the impedance vectors identified by the power swing detection exit the pickup characteristic APOL, the sign of the R components in the vectors are checked to see if they are the same on exiting and entering the pickup polygon. If this is the case, the power swing process is inclined to stabilize. Otherwise, the vector has passed through the pickup characteristic (loss of synchronism). In this case, stable power transmission is no longer possible. The device outputs an alarm to that effect (No 4163 „P.Swing unstab.“). The alarm No. 4163 „P.Swing unstab.“ is a pulse with a duration of approx. 50 ms, which can also be processed further via output relays or CFC links, e.g. for a cycle counter or a pulse counter.

If instability is detected, the device issues a three-pole trip command, thereby isolating the two system segments from each other. Power swing tripping is signalled.

Indication No. 4177 „P.Swing unst. 2“ will already be transmitted when the impedance vector passes the polygon bisect through the origin. The angle of this straight line corresponds to the inclination angle of the polygons (address 1211 **Distance Angle**). Normally, this straight line is identical with the impedance characteristic of the power line. This indication is also a pulse with a duration of approx. 50 ms, which can also be processed further via CFC logic operation. However, it does not result in power swing tripping.

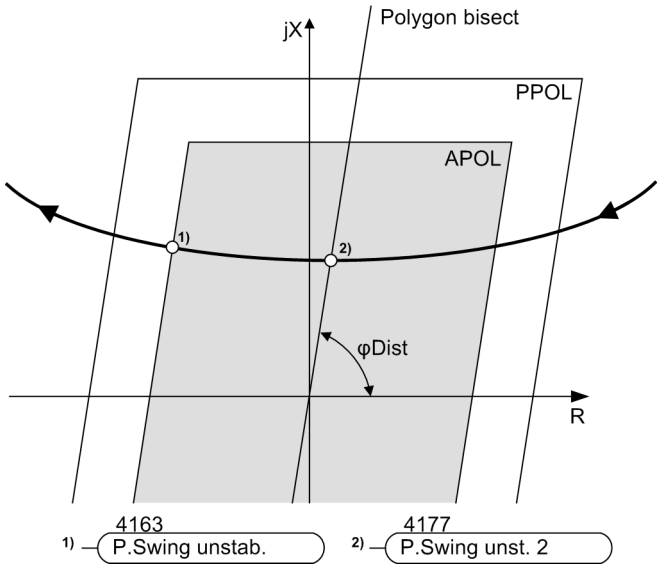

Figure 2-48 Detection of instable power swings

As the operating range of the power swing supplement depends on the distance protection settings, the power swing tripping can only be active when the distance protection has been activated.

2.3.3 Setting Notes

The power swing supplement is only active if it has been set to `Power Swing` = *Enabled* (address 120) during the configuration.

The 4 possible programs may be set in address 2002 **`P/S Op. mode`**, as described in Section 2.3: ***`All zones block`***, ***`Z1/Z1B block`***, ***`>= Z2 block`*** or ***`Z1,Z1B,Z2 block`***.

Additionally the tripping function for unstable power swings (asynchronism) can be set with parameter **`PowerSwing trip`** (address 2006), which should be set to ***`YES`*** if required (presetting is ***`NO`***). In the event of power swing tripping it is sensible to set **`P/S Op. mode`** = ***`All zones block`*** for the power swing blocking to avoid premature tripping by the distance protection.

Note

The power swing supplement works together with the impedance pickup and is only available in this combination.

2.3.4 Settings

Addr.	Parameter	Setting Options	Default Setting	Comments
2002	P/S Op. mode	All zones block Z1/Z1B block >= Z2 block Z1,Z1B,Z2 block	All zones block	Power Swing Operating mode
2006	PowerSwing trip	NO YES	NO	Power swing trip

2.3.5 Information List

No.	Information	Type of Information	Comments
4160	>Pow. Swing BLK	SP	>BLOCK Power Swing detection
4163	P.Swing unstab.	OUT	Power Swing unstable
4164	Power Swing	OUT	Power Swing detected
4166	Pow. Swing TRIP	OUT	Power Swing TRIP command
4167	Pow. Swing L1	OUT	Power Swing detected in L1
4168	Pow. Swing L2	OUT	Power Swing detected in L2
4169	Pow. Swing L3	OUT	Power Swing detected in L3
4177	P.Swing unst. 2	OUT	Power Swing unstable 2

2.4 Protection data interfaces and communication topology (optional)

Where a teleprotection scheme is to be used to achieve 100 % instantaneous protection (Section 2.6), digital communication channels can be used for data transmission between the devices. In addition to the protection data, other data can be transmitted and thus be made available at the line ends. This data includes synchronization and topology data, as well as remote trip signals, remote annunciation signals and measured values. The topology of the protection data communication system is constituted by the allocation of devices to the ends of the protected object and by the allocation of communication paths to the protection data interfaces of the devices.

2.4.1 Function Description

Protection Data Topology

For a standard layout of lines with two ends, you require one protection data interface for each device. The protection data interface is named PDI 1 (see also Figure 2-49). The corresponding protection data interface must be configured as ***Enabled*** during configuring the scope of functions (see Section 2.1.1). Additionally, the indices for the devices have to be assigned (see also Section 2.4.2 at margin heading „Protection Data Topology“).

Using two 7SA522 relays you can connect both protection data interfaces with each other provided that the two devices are equipped with two protection data interfaces each and the necessary means for transmission are available. This results in 100% redundancy as of the transmission (Figure 2-50). The devices autonomously search for the fastest communication link. If this link is faulty, the devices automatically switch over to the other link which is then used until the faster one is healthy again.

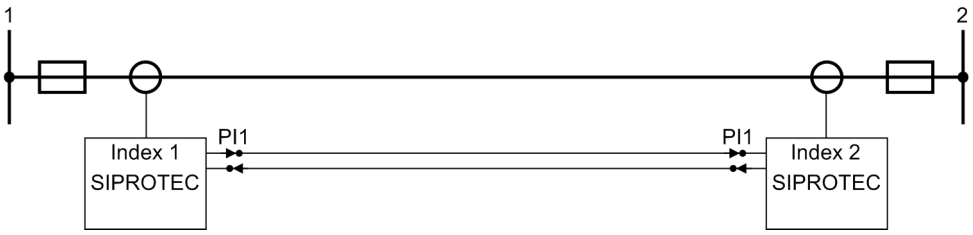

Figure 2-49 Distance protection for 2 terminals with 2 7SA522 with one protection data interface each (sender/receiver)

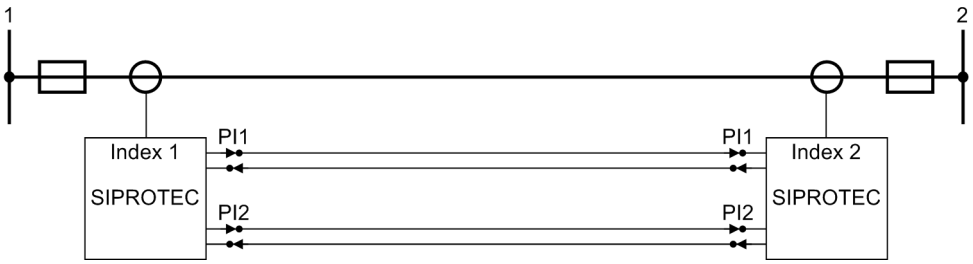

Figure 2-50 Distance protection for two ends with two 7SA522 devices with two protection data interfaces each (transmitter/ receiver)

Using three ends, at least one 7SA522 device with two protection data interfaces is required. Thus a communication chain can be formed. The number of devices (address 147 **NUMBER OF RELAY**) must correspond to the number of ends of the protected object. Please observe that only current transformer sets that limit the protected object are counted. The line in Figure 2-51, for instance, has **three** ends thus **three** devices. It is limited by **three** current transformer sets.

The communication chain begins at the device with index 1 at its protection data interface **P. INTERFACE 1**, continues in the device with index 3 at PI2, runs from the device with index 3 from **P. INTERFACE 1** to the device with index 2 at **P. INTERFACE 1**. The example shows that the indexing of the devices does not necessarily have to correspond to the arrangement of the communication chain. It is also irrelevant which protection data interface is connected to which device.

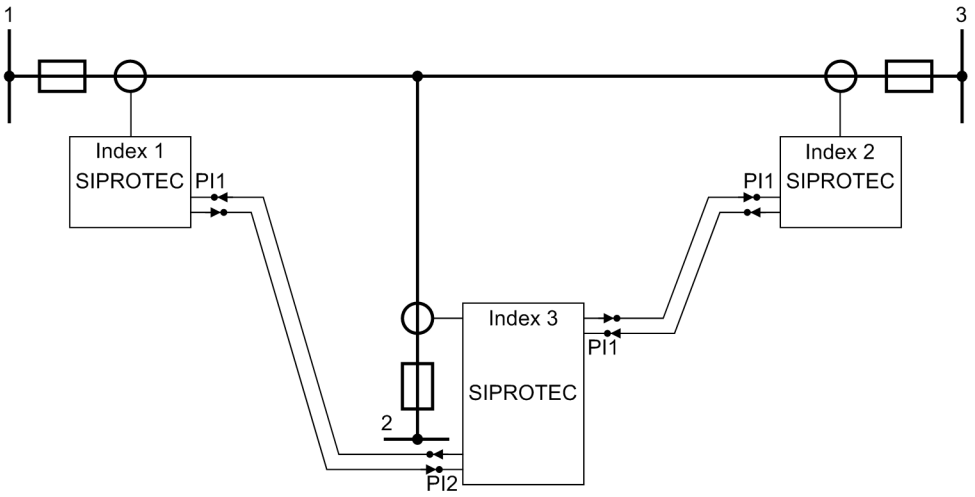

Figure 2-51 Distance protection for three ends with three 7SA522, chain topology

Communication Media

The communication can be carried out directly via fiber optic connections or via communication networks. Which kind of media is used depends on the distance and on the communication media available. For shorter distances, a direct connection via fiber optic cables with a transmission rate of 512 kBit/s is possible. Otherwise, we recommend communication converters. A transmission via copper cables and communication networks can also be realized. Please take into consideration that the responding times of the protection data communication depend on the quality of transmission and that they are prolonged in case of a reduced transmission quality and/or an increased operating time.

Figure 2-52 shows some examples for communication connections. In case of a direct connection the distance depends on the type of the optical fibre. The connection options are given in the Technical Data (see Chapter 4 „Connection modules for protection data interface“. The modules in the device are replaceable. For ordering information see Appendix, under “Ordering Information and Accessories”.

If a communication converter is used, the device and the communication converter are linked with an FO5 module via optical fibres. The converter itself is available in different versions allowing to connect it to communication networks (X.21, G703 64 kBit, G703 E1/T1) or connection via two-wire copper lines. Use th FO30 module to connect the device to the communication networks via IEEE C37.94. For the ordering information, please refer to the Appendix under “Ordering Information and Accessories”.

Note

If the protection data interfaces of the devices are connected via a communication network, a circuit switched network, e.g. a SDH and/or PDH-network is required. Packet switched networks, e.g. IP-Networks, are not suitable for protection data interface communication. Networks of this type do not have deterministic channel delays as the symmetrical and asymmetrical channel delays vary too much from one telegram to the next. As a result it is not possible to obtain a definite tripping time.

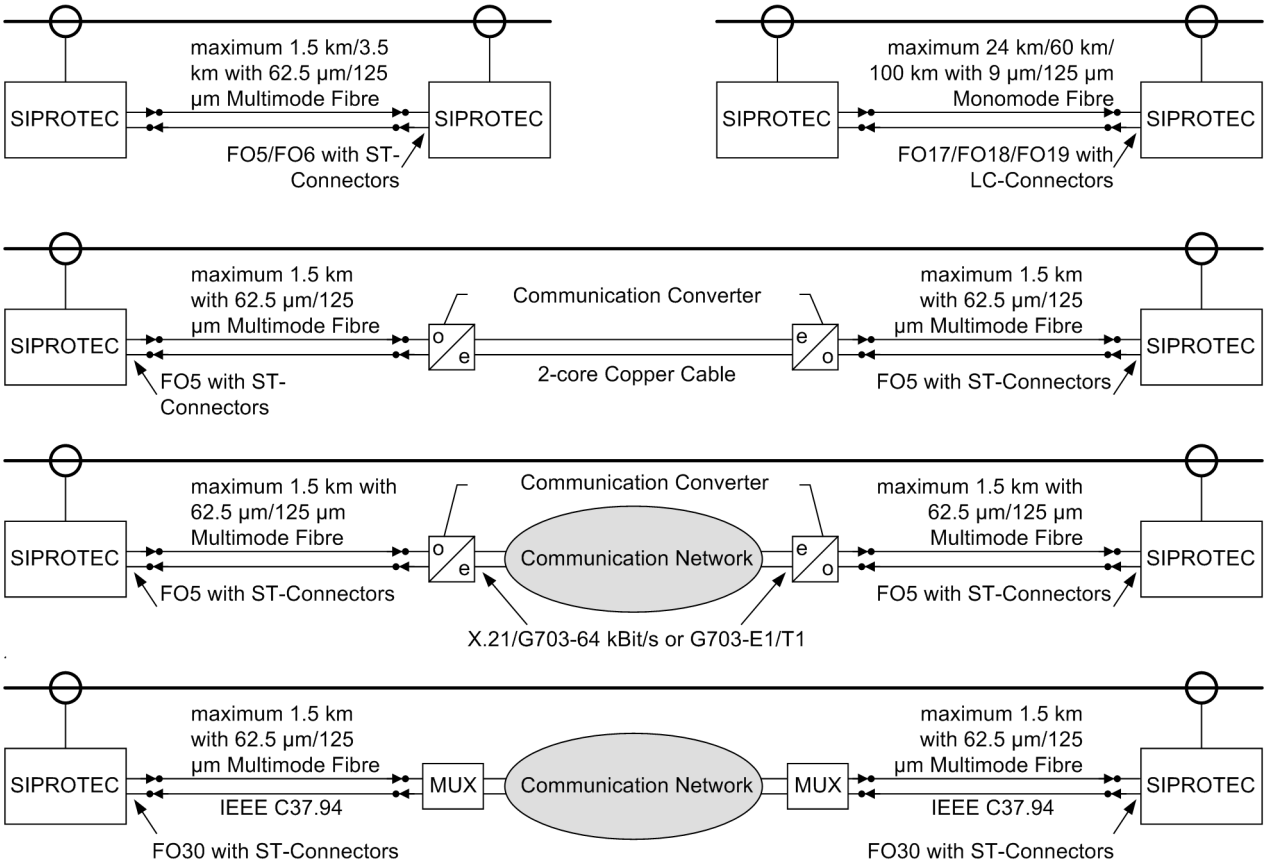

Figure 2-52 Examples for communication connections

Note

The redundancy of different communication connections (for ring topology) requires a consistent separation of the devices connected to the communication network. For example, different communication routes should not be conducted via the same multiplexer card, as there is no alternative which could be used if the multiplexer card fails.

Functional Logout

In an overall topology up to 3 devices that use teleprotection, it is possible to take out one device, e.g. for maintenance purposes, from the protection function „Teleprotection“ without having to re-parameterize the device. A logged out device (in the Functional Logout) no longer participates in the teleprotection, but still sends and receives remote indications and commands (see Section 2.4.2 under „Communication Topology“).

Disturbance and Transmission Failure

The communication is continuously monitored by the devices. Single faulty data telegrams are not a direct risk if they occur only occasionally. They are recognized and counted in the device which detects the disturbance and can be read out as statistical information.

If several faulty telegrams or no data telegrams are received, this is regarded as a communication **disturbance** when a time delay for data disturbance alarm (default setting 100 ms, can be altered) is exceeded. A corresponding alarm is output. When the system offers no alternative way of communication (as for the ring topology), the teleprotection scheme is disabled. As soon as the data transmission operates properly again, the devices will automatically switch back to the teleprotection scheme.

Transmission time jumps that, for example, can occur in case of switchings in the communication network can be recognized and corrected by the device. After at most 2 seconds the transmission times are measured again.

If the communication is interrupted permanently (i.e. longer than a settable time), this is considered to be a communication**failure**. A corresponding alarm is output. Otherwise the same reactions apply as for the disturbance.

2.4.2 Setting Notes

General

Protection data interfaces connect the devices with the communication media. The communication is permanently monitored by the devices. Address 4509 **T-DATA DISTURB** defines after which delay time the user is informed about a faulty or missing telegram. Address 4510 **T-DATAFAIL** is used to set the time after which a transmission failure alarm is output.

Protection Data Interface 1

At address 4501 **STATE PROT I 1**, the protection data interface can be switched ***ON*** or ***OFF***. If it is switched ***OFF***, this corresponds to a transmission failure. In case of a ring topology, the transmission of data can continue its operation, but not in case of a chain topology.

In address 4502 **CONNEC. 1 OVER** you can select the transmission medium which to connect to protection data interface 1. The following selection is possible:

F.optic direct, i.e. direct communication via fibre-optic cable with 512 kBit/s;

Com conv 64 kBit/s, i.e. via communication converters with 64 kBit/s (G703.1 or X.21),

Com conv 128 kBit/s, i.e. via communication converters with 128 kBit/s (X.21, copper cable),

Com conv 512 kBit/s i.e. via communication converter 512 kbit/s (X.21).

IEEE C37.94, i.e. communication network connection with 1, 2, 4 or 8 slots.

The possibilities may vary for the different device versions. The data must be identical at both ends of a communication route.

The devices measure and monitor the signal transit times. Deviations are corrected, as long as they are within the permissible range. These permissible ranges are set under address 4505 and 4605 and can generally remain unchanged.

The maximum permissible signalling time (address 4505 **PROT 1 T-DELAY**) is set by default to a value that does not exceed the usual value of communication media. This parameter can only be changed in DIGSI at **Display Additional Settings**. If it is exceeded during operation (e.g. because of switchover to a different transmission path), the message „PI1 TD alarm“ will be issued. Once a fault has been detected in the communication of the protection data interface, the time at address 4511 **Td ResetRemote** is started for resetting the remote signals. Please note that only the time of the device whose remote end has failed is considered. Thus the same time is valid for all devices following in a chain.

Protection Data Interface 2

If protection data interface 2 exists and is used, the same options apply as for protection data interface 1. The corresponding parameters are located under addresses 4601 **STATE PROT I 2** (***ON*** or ***OFF***), 4602 **CONNEC. 2 OVER** and 4605 **PROT 2 T-DELAY**. The last parameter can only be modified with DIGSI® under **Additional Settings**.

Protection Data Topology

First, define your communication topology: Number the devices consecutively. This numbering is a serial device index that serves for your overview. It starts for each distance protection system (i.e. for each protected object) with 1. For the distance protection system the device with index 1 is always the absolute-time master, i.e. the absolute time management of all devices which belong together depends on the absolute time management of this device. As a result, the time information of all devices is comparable at all times. The device index serves to clearly define the devices within the distance protection system (i.e. for one protected object).

An ID number is also to be given to each single device (device-ID). The device–ID is used by the communication system to identify each individual device. It must be between 1 and 65534 and must be unique within the communication system. The ID number identifies the devices in the communication system since the exchange of information between several distance protection systems (thus also for several protected objects) can be executed via the same communication system.

Please make sure that the possible communication links and the existing interfaces conform to each other. If not all devices are equipped with **two** protection data interfaces, those with only **one** protection data interface must be located at the ends of the communication chain. A **ring topology** is only possible if **all** devices in a distance protection system are equipped with**two** protection data interfaces.

If you use different physical interfaces and/or communication links, please make sure that each protection data interface is compatible with the intended communication link.

For a protected object with two ends (e.g. a line) the addresses 4701 **ID OF RELAY 1** and 4702 **ID OF RELAY 2** are set, e.g. for device 1 the device-ID ***1*** and for device 2 the device-ID ***2*** (Figure 2-53). The indices of the devices and the device-IDs do not have to match here, as mentioned above.

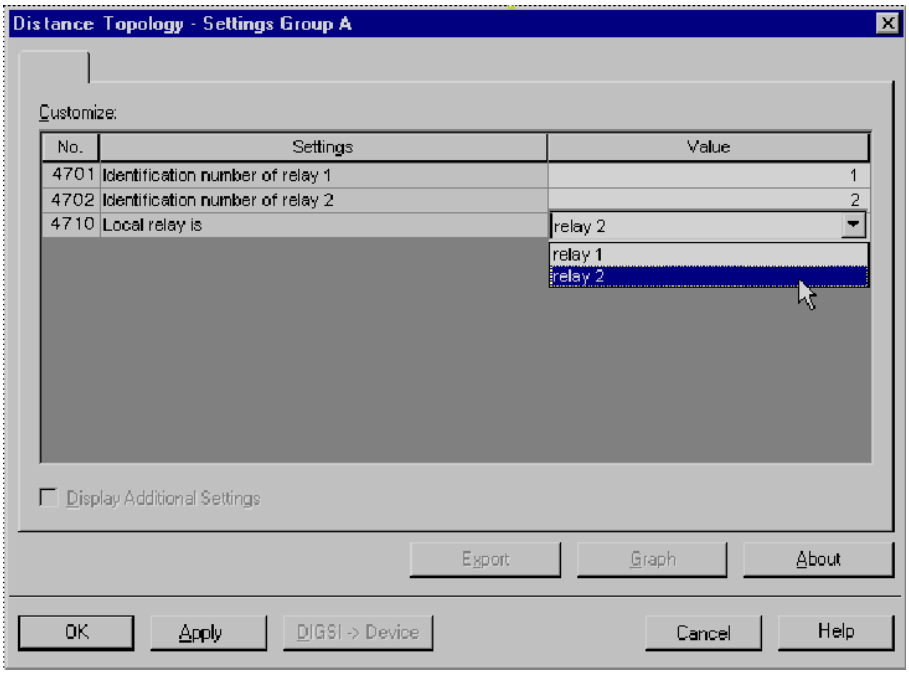

Figure 2-53 Distance protection topology for 2 ends with 2 devices - example

For a protected object with more than two ends (and corresponding devices), the third end is allocated to its device ID at parameter address 4703 **ID OF RELAY 3**. A maximum of 3 line ends is possible with 3 devices. Figure 2-54 gives an example with 3 relays. During the configuration of the protection functions the number of devices required for the relevant application was set in address 147 **NUMBER OF RELAY**. Device IDs can be entered for as many devices as were configured under that address, no further IDs are offered during setting.

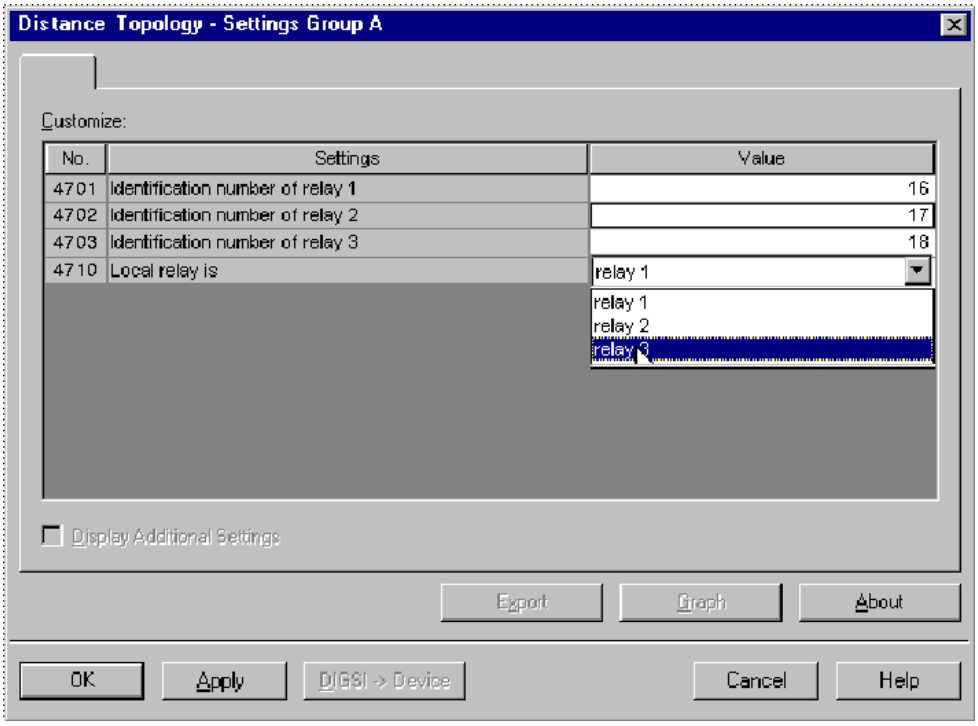

Figure 2-54 Distance protection topology for 3 ends with 3 devices - example

In address 4710 **LOCAL RELAY** you finally indicate the actual local device. Enter the index for each device (according to the consecutive numbering used). Each index from 1 to the entire number of devices must be used once, but may not be used twice.

Make sure that the parameters of the distance protection topology for the distance protection system are conclusive:

- Each device index can only be used once;
- Each device index must be allocated unambiguously to one device ID;
- Each device-index must be the index of a local device once;
- The device with index 1 is the source for the absolute time management (absolute time master).

During startup of the protection system, the above listed conditions are checked. If one out of these conditions is not fulfilled, no protection data can be transmitted. The device signals „`DT inconsistent`“ („Device table inconsistent“).

Device Logout

A device can be removed from the topology via the receive signal 3484 „`Logout`“ so that the remaining relays can still assume their protection function.

If a device logs out functionally, the number of active protection devices is reduced. In this case, the teleprotection schemes are automatically switched from 3 to 2 ends. If no remote end is available, „`Dis.T.Carr.Fail`“ is signalled.

2.4.3 Settings

Addresses which have an appended "A" can only be changed with DIGSI, under Additional Settings.

Addr.	Parameter	Setting Options	Default Setting	Comments
4501	STATE PROT I 1	ON OFF	ON	State of protection interface 1
4502	CONNEC. 1 OVER	F.optic direct Com conv 64 kBit/s Com conv 128 kBit/s Com conv 512 kBit/s C37.94 1 slot C37.94 2 slots C37.94 4 slots C37.94 8 slots	F.optic direct	Connection 1 over
4505A	PROT 1 T-DELAY	0.1 .. 30.0 ms	30.0 ms	Prot 1: Maximal permissible delay time
4509	T-DATA DISTURB	0.05 .. 2.00 sec	0.10 sec	Time delay for data disturbance alarm
4510	T-DATAFAIL	0.0 .. 60.0 sec	6.0 sec	Time del for transmission failure alarm
4511	Td ResetRemote	0.00 .. 300.00 sec; ∞	0.00 sec	Remote signal RESET DELAY for comm.fail
4601	STATE PROT I 2	ON OFF	ON	State of protection interface 2
4602	CONNEC. 2 OVER	F.optic direct Com conv 64 kB Com conv 128 kB Com conv 512 kB C37.94 1 slot C37.94 2 slots C37.94 4 slots C37.94 8 slots	F.optic direct	Connection 2 over
4605A	PROT 2 T-DELAY	0.1 .. 30.0 ms	30.0 ms	Prot 2: Maximal permissible delay time
4701	ID OF RELAY 1	1 .. 65534	1	Identification number of relay 1
4702	ID OF RELAY 2	1 .. 65534	2	Identification number of relay 2
4703	ID OF RELAY 3	1 .. 65534	3	Identification number of relay 3
4710	LOCAL RELAY	relay 1 relay 2 relay 3	relay 1	Local relay is

2.4.4 Information List

No.	Information	Type of Information	Comments
3196	local Teststate	IntSP	Local relay in Teststate
3215	Wrong Firmware	OUT	Incompatible Firmware Versions
3217	PI1 Data reflec	OUT	Prot Int 1: Own Datas received
3218	PI2 Data reflec	OUT	Prot Int 2: Own Datas received
3227	>PI1 light off	SP	>Prot Int 1: Transmitter is switched off
3228	>PI2 light off	SP	>Prot Int 2: Transmitter is switched off
3229	PI1 Data fault	OUT	Prot Int 1: Reception of faulty data
3230	PI1 Datafailure	OUT	Prot Int 1: Total receiption failure
3231	PI2 Data fault	OUT	Prot Int 2: Reception of faulty data
3232	PI2 Datafailure	OUT	Prot Int 2: Total receiption failure
3233	DT inconsistent	OUT	Device table has inconsistent numbers
3234	DT unequal	OUT	Device tables are unequal
3235	Par. different	OUT	Differences between common parameters
3236	PI1<->PI2 error	OUT	Different PI for transmit and receive
3239	PI1 TD alarm	OUT	Prot Int 1: Transmission delay too high
3240	PI2 TD alarm	OUT	Prot Int 2: Transmission delay too high
3243	PI1 with	VI	Prot Int 1: Connected with relay ID
3244	PI2 with	VI	Prot Int 2: Connected with relay ID
3274	PI1: C37.94 n/a	OUT	PI1: IEEE C37.94 not supported by module
3275	PI2: C37.94 n/a	OUT	PI2: IEEE C37.94 not supported by module
3457	Ringtopology	OUT	System operates in a closed Ringtopology
3458	Chaintopology	OUT	System operates in a open Chaintopology
3464	Topol complete	OUT	Communication topology is complete
3475	Rel1Logout	IntSP	Relay 1 in Logout state
3476	Rel2Logout	IntSP	Relay 2 in Logout state
3477	Rel3Logout	IntSP	Relay 3 in Logout state
3484	Logout	IntSP	Local activation of Logout state
3487	Equal IDs	OUT	Equal IDs in constellation
3491	Rel1 Login	OUT	Relay 1 in Login state
3492	Rel2 Login	OUT	Relay 2 in Login state
3493	Rel3 Login	OUT	Relay 3 in Login state

2.5 Remote signals via protection data interface (optional)

2.5.1 Description

Provided that the devices work with protection data transmission via digital communication links at the ends, the transmission of up to 28 items of binary information of any type from one device to the other is possible. Four of 28 information items are transmitted like protection signals with high priority, i.e. very fast, and are therefore especially suitable for the transmission of other protection signals which are generated outside of 7SA522. The other 24 are transmitted in the back-ground and are therefore suitable for any information that does not depend on high-speed transmission, such as information on the events taking place in a substation which may also be useful in other substations.

The information enters the device via binary inputs and can leave it again at the other ends via binary outputs. The integrated user-defined CFC logic allows the signals to be linked logically with one another or with other information items of the device's protection and monitoring functions.

The binary outputs and the binary inputs to be used must be allocated appropriately during the configuration of the input and output functions (see SIPROTEC 4 System Description). The four high-priority signals enter into the device via the binary inputs „>Remote CMD 1“ to „>Remote CMD 4“. They are then transmitted to the devices at the other ends and can be processed on each receiving side with the output functions „Remote CMD1 rec“ to „Remote CMD4 rec“.

If the remote commands are to be used for direct remote tripping, they must be allocated at the send side via CFC with the function that is to perform the transfer trip at the opposite side, and at the receiving side, also via CFC, with the „>Ext. TRIP ...“ input signals.

The other 24 items of information reach the device via the binary inputs „>Rem. Signal 1“ to „>Rem.Signal24“ and are available under „Rem.Sig 1recv“ etc. at the receiving side.

No settings are required for the transmission of binary information. Each device sends the injected information to all other devices at the ends of the protected object, even if the topology is incomplete. Where selection is necessary, it will have to be carried out by appropriate allocation and by a link at the receiving side.

Even devices that have logged out functionally (Functional Logout) can send and receive remote signals and commands.

The annunciations **Dev x available** of the topology detection function can be used to determine whether the signals of the sending devices are still available. They are issued if device x is actively involved in the communication topology and this state is stable.

Once a fault has been detected in the communication of the protection data interface, the time at address 4511 **Td ResetRemote** is started for resetting the remote signals.

2.5.2 Information List

No.	Information	Type of Information	Comments
3541	>Remote CMD 1	SP	>Remote Command 1 signal input
3542	>Remote CMD 2	SP	>Remote Command 2 signal input
3543	>Remote CMD 3	SP	>Remote Command 3 signal input
3544	>Remote CMD 4	SP	>Remote Command 4 signal input
3545	Remote CMD1 rec	OUT	Remote Command 1 received
3546	Remote CMD2 rec	OUT	Remote Command 2 received
3547	Remote CMD3 rec	OUT	Remote Command 3 received
3548	Remote CMD4 rec	OUT	Remote Command 4 received
3549	>Rem. Signal 1	SP	>Remote Signal 1 input
3550	>Rem.Signal 2	SP	>Remote Signal 2 input
3551	>Rem.Signal 3	SP	>Remote Signal 3 input
3552	>Rem.Signal 4	SP	>Remote Signal 4 input
3553	>Rem.Signal 5	SP	>Remote Signal 5 input
3554	>Rem.Signal 6	SP	>Remote Signal 6 input
3555	>Rem.Signal 7	SP	>Remote Signal 7 input
3556	>Rem.Signal 8	SP	>Remote Signal 8 input
3557	>Rem.Signal 9	SP	>Remote Signal 9 input
3558	>Rem.Signal10	SP	>Remote Signal 10 input
3559	>Rem.Signal11	SP	>Remote Signal 11 input
3560	>Rem.Signal12	SP	>Remote Signal 12 input
3561	>Rem.Signal13	SP	>Remote Signal 13 input
3562	>Rem.Signal14	SP	>Remote Signal 14 input
3563	>Rem.Signal15	SP	>Remote Signal 15 input
3564	>Rem.Signal16	SP	>Remote Signal 16 input
3565	>Rem.Signal17	SP	>Remote Signal 17 input
3566	>Rem.Signal18	SP	>Remote Signal 18 input
3567	>Rem.Signal19	SP	>Remote Signal 19 input
3568	>Rem.Signal20	SP	>Remote Signal 20 input
3569	>Rem.Signal21	SP	>Remote Signal 21 input
3570	>Rem.Signal22	SP	>Remote Signal 22 input
3571	>Rem.Signal23	SP	>Remote Signal 23 input
3572	>Rem.Signal24	SP	>Remote Signal 24 input
3573	Rem.Sig 1recv	OUT	Remote signal 1 received
3574	Rem.Sig 2recv	OUT	Remote signal 2 received
3575	Rem.Sig 3recv	OUT	Remote signal 3 received
3576	Rem.Sig 4recv	OUT	Remote signal 4 received
3577	Rem.Sig 5recv	OUT	Remote signal 5 received
3578	Rem.Sig 6recv	OUT	Remote signal 6 received
3579	Rem.Sig 7recv	OUT	Remote signal 7 received
3580	Rem.Sig 8recv	OUT	Remote signal 8 received
3581	Rem.Sig 9recv	OUT	Remote signal 9 received
3582	Rem.Sig10recv	OUT	Remote signal 10 received
3583	Rem.Sig11recv	OUT	Remote signal 11 received
3584	Rem.Sig12recv	OUT	Remote signal 12 received

No.	Information	Type of Information	Comments
3585	Rem.Sig13recv	OUT	Remote signal 13 received
3586	Rem.Sig14recv	OUT	Remote signal 14 received
3587	Rem.Sig15recv	OUT	Remote signal 15 received
3588	Rem.Sig16recv	OUT	Remote signal 16 received
3589	Rem.Sig17recv	OUT	Remote signal 17 received
3590	Rem.Sig18recv	OUT	Remote signal 18 received
3591	Rem.Sig19recv	OUT	Remote signal 19 received
3592	Rem.Sig20recv	OUT	Remote signal 20 received
3593	Rem.Sig21recv	OUT	Remote signal 21 received
3594	Rem.Sig22recv	OUT	Remote signal 22 received
3595	Rem.Sig23recv	OUT	Remote signal 23 received
3596	Rem.Sig24recv	OUT	Remote signal 24 received

2.6 Teleprotection for distance protection

2.6.1 General

Purpose of Teleprotection

Faults which occur on the protected line, beyond the first distance zone, can only be cleared selectively by the distance protection after a delay time. On line sections that are shorter than the smallest sensible distance setting, faults can also not be selectively cleared instantaneously.

To achieve non-delayed and selective tripping on 100 % of the line length for all faults by the distance protection, the distance protection can exchange and process information with the opposite line end by means of teleprotection schemes. This can be done in a conventional way using send and receive contacts. As an alternative, digital communication lines can be used for signal transmission (ordering option).

Teleprotection Schemes

A distinction is made between underreach and overreach schemes.

In underreach schemes, the protection is set with a normal grading characteristic. If a trip command occurs in the first zone, the other line end receives this information via a transmission channel. There the received signal initates a trip, either by activation of overreach zone Z1B or via a direct trip command.

7SA522 allows:

- Permissive Underreach Transfer Trip with Zone Acceleration Z1B (PUTT),
- Direct (Underreach) Transfer Trip

In overreach schemes, the protection works from the start with a fast overreaching zone. This zone, however, can only cause a trip if the opposite end also detects a fault in the overreaching zone. A release (unblock) signal or a block signal can be transmitted. The following teleprotection schemes are differentiated:

Permissive (release) schemes:

- Permissive Overreach Transfer Trip (POTT) (with overreaching zone Z1B)
- Unblocking with overreaching zone Z1B.

Blocking scheme:

- Unblocking with overreaching zone Z1B.

Since the distance zones function independently, an instantaneous trip in Z1 without a release or blocking signal is always possible. If fast tripping in Z1 is not required (e.g. on very short lines), then Z1 must be delayed with T1.

Transmission Channels

For the signal transmission, at least one channel in each direction is required. For example, fibre optic connections or voice frequency modulated high frequency channels via pilot cables, power line carrier or microwave radio links can be used for this purpose.

If the device is equipped with an optional protection data interface, digital communication lines can be used for signal transmission which include: e.g.: Fibre optic cables, communication networks or dedicated cables.

The following signal transmission schemes are suited for these kinds of transmission:

- Permissive Underreach Transfer Trip with Zone Acceleration Z1B (PUTT),
- Permissive Overreach Transfer Trip (POTT) (with overreaching zone Z1B).

7SA522 allows also the transmission of phase-selective signals. This has the advantage that reliable single-pole automatic reclosure can be carried out even when two single-phase faults occur on different lines in the system. Where the digital protection data interface is used, the signal transmission is always phase segregated.

The signal transmission schemes are also suited to three terminal lines (teed feeders). In this case, a signal is transmitted from each of the three ends to each of the others in both directions. Phase segregated transmission is only possible for three terminal line applications if digital communication channels are used.

During disturbances in the transmission path, the teleprotection supplement may be blocked without affecting the normal time graded distance protection. The measuring reach control (enable zone Z1B) can be transmitted from the internal automatic reclose function or via the binary input „>Enable ARzones“ from an external re-closure device. With conventional signal transmission schemes, the disturbance is signalled by a binary input, with digital communication it is detected automatically by the protection device.

2.6.2 Method of Operation

Activation and Deactivation

The teleprotection function can be switched on and off by means of the parameter 2101 **FCT Telep. Dis.**, or via the system interface (if available) and via binary input (if this is allocated). The switched state is saved internally (refer to Figure 2-55) and secured against loss of auxiliary supply. It is only possible to switch on from the source where previously it had been switched off from. To be active, it is necessary that the function is not switched off from one of the three switching sources.

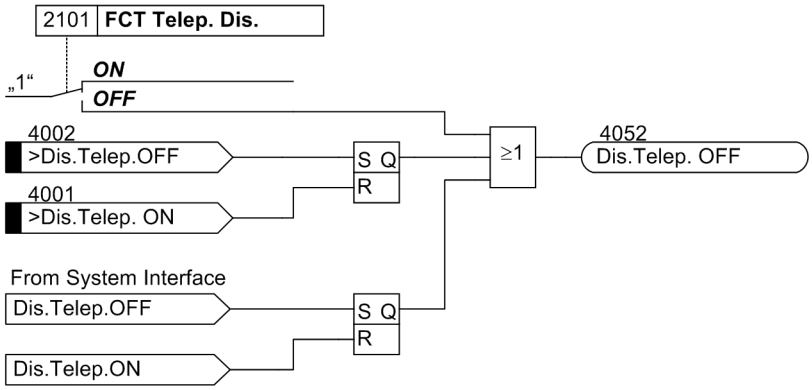

Figure 2-55 Activation and deactivation of teleprotection

2.6.3 Permissive Underreach Transfer Trip with Zone Acceleration Z1B (PUTT)

The following procedure is suited for both conventional and digital transmission media.

Principle

Figure 2-56 shows the operation scheme for the permissive underreach transfer trip with zone acceleration. In case of a fault inside zone Z1, the transfer trip signal is sent to the opposite line end. The signal received there causes tripping if the fault is detected in the preset direction inside zone Z1B. The transmit signal can be prolonged by T_S (settable at address 2103 **Send Prolong.**) to compensate for possible differences in the pickup times at the two line ends. The distance protection is set in such a way that the first zone reaches up to approximately 85% of the line length, the overreaching zone, however, is set to reach beyond the next station (approximately 120% of the line length). On three terminal lines Z1 is also set to approximately 85% of the shorter line section, but at least beyond the tee-off point. It has to be observed that Z1 does not reach beyond one of the two other line ends. Z1B must securely reach beyond the longer line section, even when additional infeed is possible via the tee point. For this procedure, transmission via a protection data interface (if provided) is offered.

In protection relays equipped with a protection data interface, address 121 **Teleprot. Dist.** allows to set ***SIGNALv.ProtInt***. At address 2101 **FCT Telep. Dis.** the ***PUTT (Z1B)*** scheme can be selected.

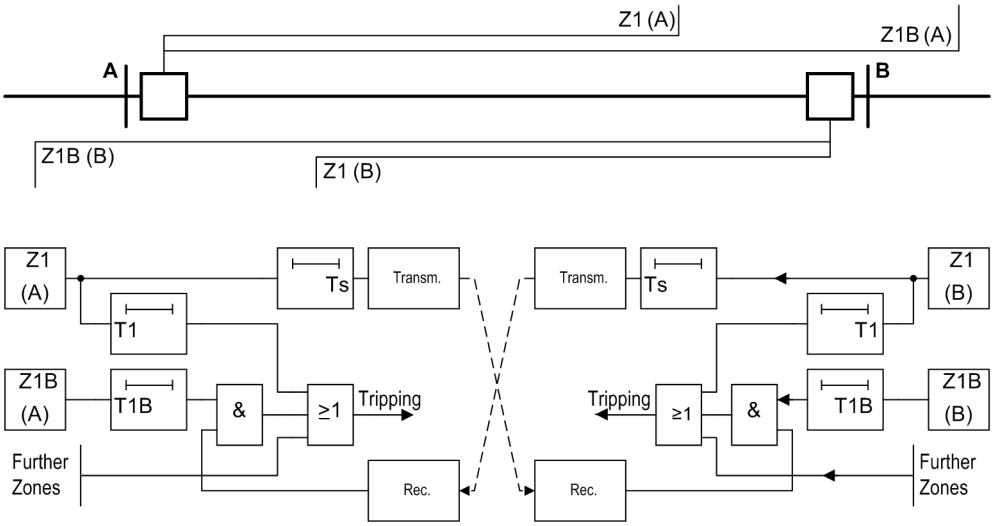

Figure 2-56 Operation scheme of the permissive underreach transfer trip method via Z1B

Sequence

The permissive transfer trip only works for faults in the „Forward“ direction. Accordingly, the first zone Z1 and the overreaching zone Z1B of the distance protection must definitely be set to ***Forward*** (address 1301 **Op. mode Z1** and 1351 **Op. mode Z1B**, refer also to Section 2.2.2 under the margin heading „Independent Zones Z1 up to Z6“ and „Controlled Zone Z1B“).

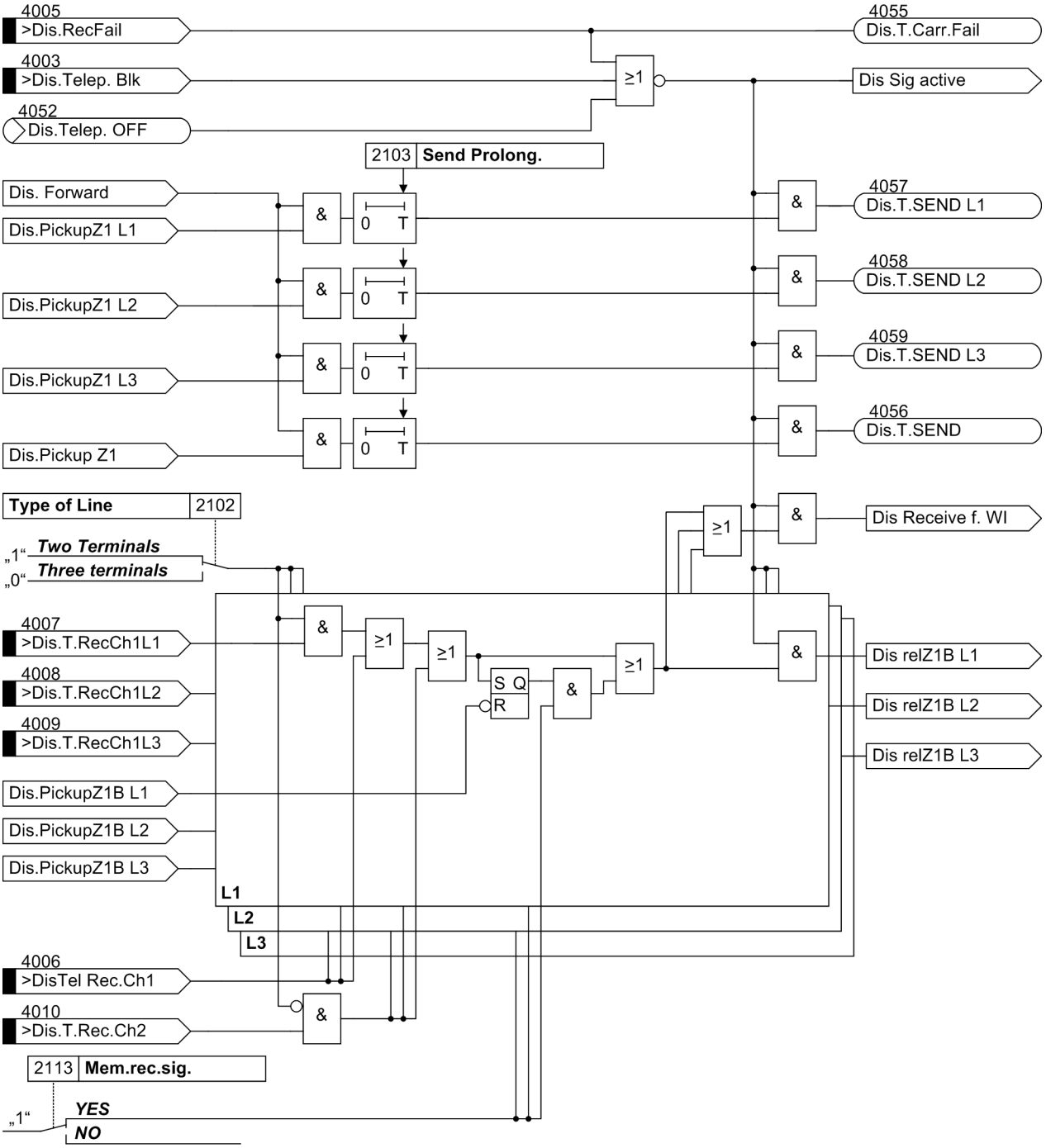

Figure 2-57 Logic diagram of the permissive underreach transfer trip (PUTT) using Z1B (one line end, conventional, no protection data interface)

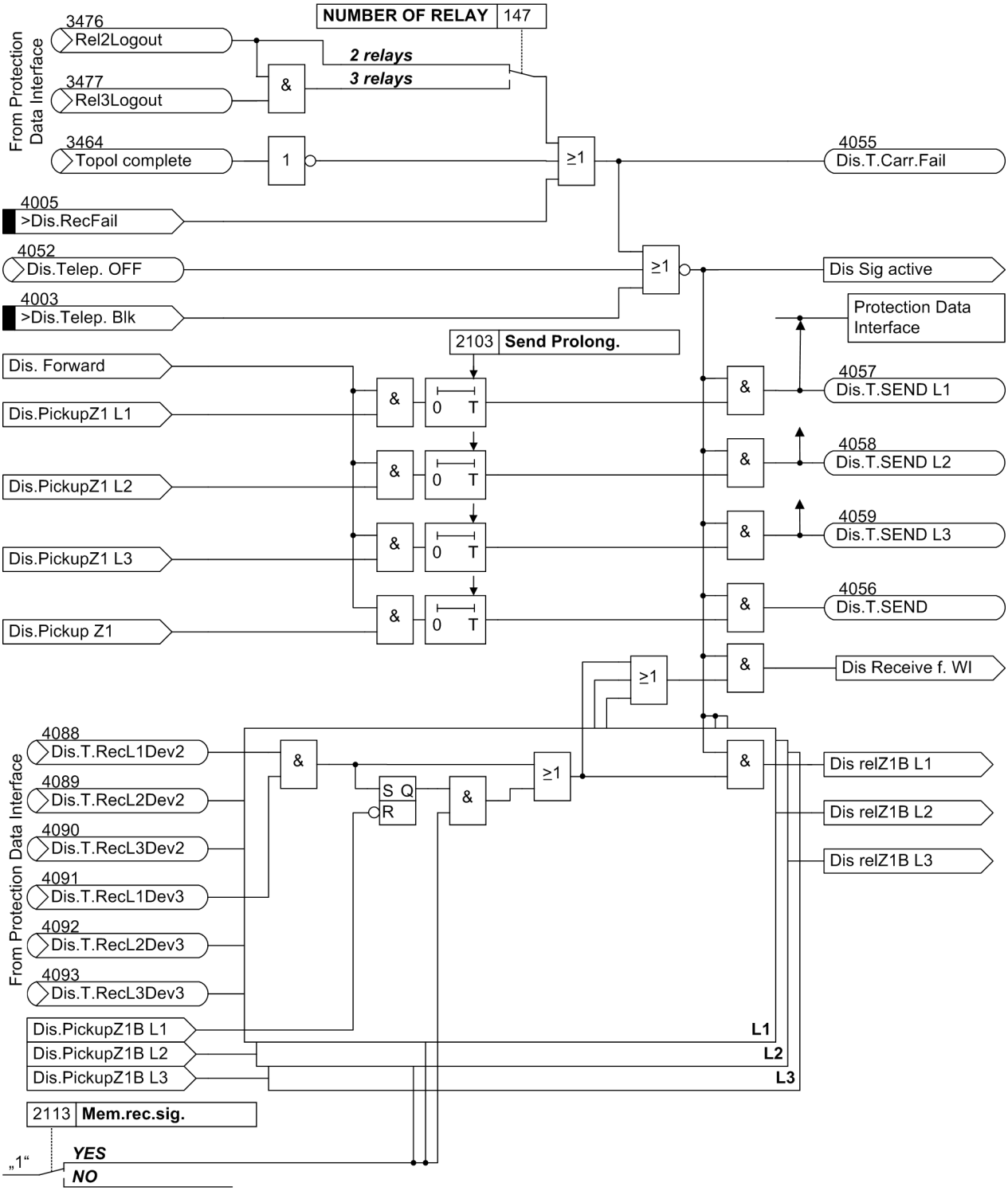

Figure 2-58 Logic diagram of the permissive underreach transfer trip (PUTT) using Z1B (one line end, with protection data interface)

On two terminal lines, the signal transmission may be phase segregated. In this case, send and receive circuits operate separately for each phase. On three terminal lines, the transmit signals are sent to both opposite line ends. The receive signals are then combined with an OR logic function. If the parameter **Teleprot. Dist.** (address 121) is set to ***SIGNALv.ProtInt*** and parameter **NUMBER OF RELAY** (address 147) is set to ***3 relays***, the device is informed about two remote ends. The default setting is ***2 relays***, which corresponds to one remote end. If digital protection transmission is applied and the protection data interface is used, signals will always be transmitted phase-selectively.

If conventional transmission is used, the parameter **Type of Line** (address 2102) informs the device whether it has one or two opposite line ends.

During disturbance of the signal transmission path, the overreaching zone Z1B may be activated by an automatic reclosure by setting parameter **1st AR -> Z1B**, and by an external recloser device via the binary input „>Enable ARzones“.

If the parameter **Mem.rec.sig.** (address 2113) is set to ***YES*** and an own distance protection pickup is available in Z1B, the phase-selective release effected via the signal extension is stored. If the own distance protection pickup in Z1B drops out, it will be deleted.

If at one line end there is weak or zero infeed, so that the distance protection does not pick up, the circuit breaker can still be tripped. This „weak-infeed tripping“ is described in Section 2.9.2.

2.6.4 Direct Underreach Transfer Trip

The following scheme is suited for conventional transmission media.

Principle

As is the case with PUTT (pickup) or PUTT with zone acceleration, a fault in the first zone Z1 is transmitted to the opposite line end by means of a transfer trip signal. The signal received there causes a trip without further queries after a short security margin Tv (settable in address 2202 **Trip Time DELAY**) (Figure 2-59). The transmit signal can be prolonged by T_S (settable in address 2103 **Send Prolong.**), to compensate for possible differences in the pickup time at the two line ends. The distance protection is set such that the first zone reaches up to approximately 85% of the line length. On three terminal lines Z1 is also set to approximately 85 % of the shorter line section, but at least beyond the tee-off point. Care must be taken to ensure that Z1 does not reach beyond one of the two other line ends. The overreaching zone Z1B is not required here. It may, however, be activated by internal automatic reclosure or external criteria via the binary input „>Enable ARzones“.

The advantage compared to the other permissive underreach transfer trip schemes lies in the fact that both line ends are tripped without the necessity for any further measures, even if one line end has no infeed. There is however no further supervision of the trip signal at the receiving end.

The direct underreach transfer trip application is not provided by its own selectable teleprotection scheme setting, but implemented by setting the teleprotection supplement to operate in the permissive underreach transfer trip scheme (address 121 **Teleprot. Dist.** = ***PUTT (Z1B)***), and using the binary inputs for direct external trip at the receiving end. Correspondingly, the transmit circuit in Section „Permissive Underreach Transfer Trip with Zone Acceleration Z1B (PUTT)“ (Figure 2-58) applies. For the receive circuit the logic of the „external trip“ as described in Section 2.10 applies.

On two terminal lines, the signal transmission may be phase segregated. In this case, send and receive circuits operate separately for each phase. On three terminal lines, the transmit signals are sent to both opposite line ends. The receive signals are then combined with a logical OR function.

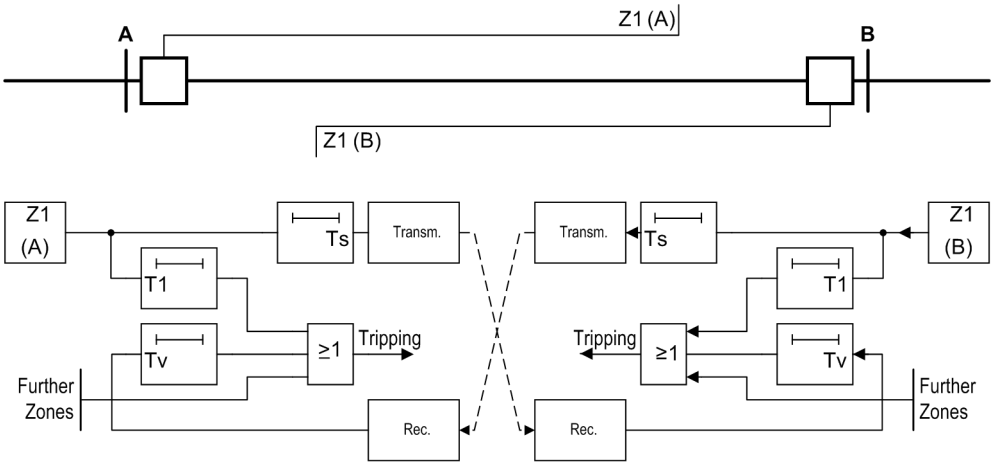

Figure 2-59 Function diagram of the direct underreach transfer trip scheme

2.6.5 Permissive Overreach Transfer Trip (POTT)

The following procedure is suited for both conventional and digital transmission media.

Principle

The permissive overreach transfer mode uses a permissive release principle. The overreaching zone Z1B, set beyond the opposite station, is decisive. This mode can also be used on extremely short lines where a setting of 85% of line length for zone Z1 is not possible and accordingly selective non-delayed tripping could not be achieved. In this case however zone Z1 must be delayed by T1, to avoid non selective tripping by zone Z1 (Figure 2-60).

If the distance protection recognizes a fault inside the overreaching zone Z1B, it initially sends a release signal to the opposite line end. If a release signal is also received from the opposite end, the trip signal is forwarded to the command relay. A prerequisite for fast tripping is therefore that the fault is recognised inside Z1B in forward direction at both line ends. The distance protection is set in such a way that overreaching zone Z1B reaches beyond the next station (approximately 120% of the line length). On three terminal lines, Z1B must be set to reliably reach beyond the longer line section, even if there is an additional infeed via the tee point. The first zone is set in accordance with the usual grading scheme, i.e. approximately 85% of the line length; on three terminal lines at least beyond the tee point.

The transmit signal can be prolonged by T_S (settable under address 2103 **Send Prolong.**). The prolongation of the send signal only comes into effect if the protection has already issued a trip command. This ensures release of the opposite line end even when the short-circuit has been switched off rapidly by the independent zone Z1.

For all zones except Z1B, tripping results without release from the opposite line end, allowing the protection to function with the usual grading characteristic independent of the signal transmission.

For this procedure, transmission via a protection data interface (if provided) is offered.

In protection relays equipped with a protection data interface, address 121 **Teleprot. Dist.** allows to set ***SIGNALv.ProtInt***. At address 2101 **FCT Telep. Dis.** the ***POTT*** scheme can be selected.

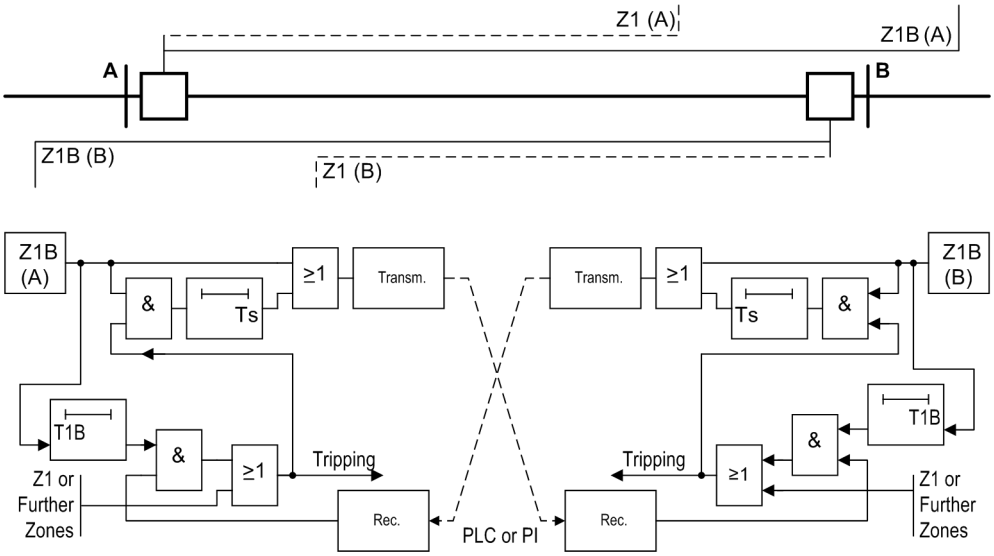

Figure 2-60 Function diagram of the permissive overreach transfer trip method

Permissive Overreach Transfer Trip (POTT)

The permissive overreach transfer trip only functions for faults in the „Forward“ direction. Accordingly, the first overreach zone ZB1of the distance protection must definitely be set to ***Forward*** in addresses 1351 **Op. mode Z1B**, refer also to Section 2.2.2 under the margin heading „Controlled Zone ZB1“.

On two terminal lines, the signal transmission may be phase segregated. In this case, send and receive circuits operate separately for each phase. On three terminal lines, the transmit signal is sent to both opposite line ends. The receive signals are then combined with a logical AND gate, as all three line ends must transmit a send signal during an internal fault. If the parameter **Teleprot. Dist.** (address 121) is set to ***SIGNALv.ProtInt*** and parameter **NUMBER OF RELAY** (address 147) is set to ***3 relays***, the device is informed about two remote ends. The default setting is ***2 relays***, which corresponds to one remote end. In protection relays equipped with one protection data interface, signal transmission is always phase segregated (Figure 2-62).

If conventional transmission is used, parameter **Type of Line** (address 2102) informs the device whether it has one or two opposite line ends (Figure 2-61).

During disturbance of the signal transmission path, the overreaching zone Z1B may be activated by an automatic reclosure by setting parameter **1st AR -> Z1B**, and by an external recloser device via the binary input „>Enable ARzones“.

The occurrence of erroneous signals resulting from transients during clearance of external faults or from direction reversal resulting during the clearance of faults on parallel lines, is neutralized by the „Transient Blocking“.

On feeders with single-end infeed, the line end with no infeed cannot generate a release signal as no fault detection occurs there. To achieve tripping by the permissive overreach transfer scheme also in this case, the device features a special function. This „Weak Infeed Function“ (echo function) is described in Section „Measures for Weak and Zero Infeed“. It is activated when a signal is received from the opposite line end — in the case of three terminal lines from at least one of the opposite line ends — without the device having detected a fault.

The circuit breaker can also be tripped at the line end with no or only weak infeed. This „weak-infeed tripping“ is described in Section 2.9.2.

If the parameter **Mem.rec.sig.** (address 2113) is set to ***YES*** and an own distance protection pickup is available in Z1B, the phase-selective release effected via the signal extension is stored. If the own distance protection pickup in Z1B drops out, it will be deleted.

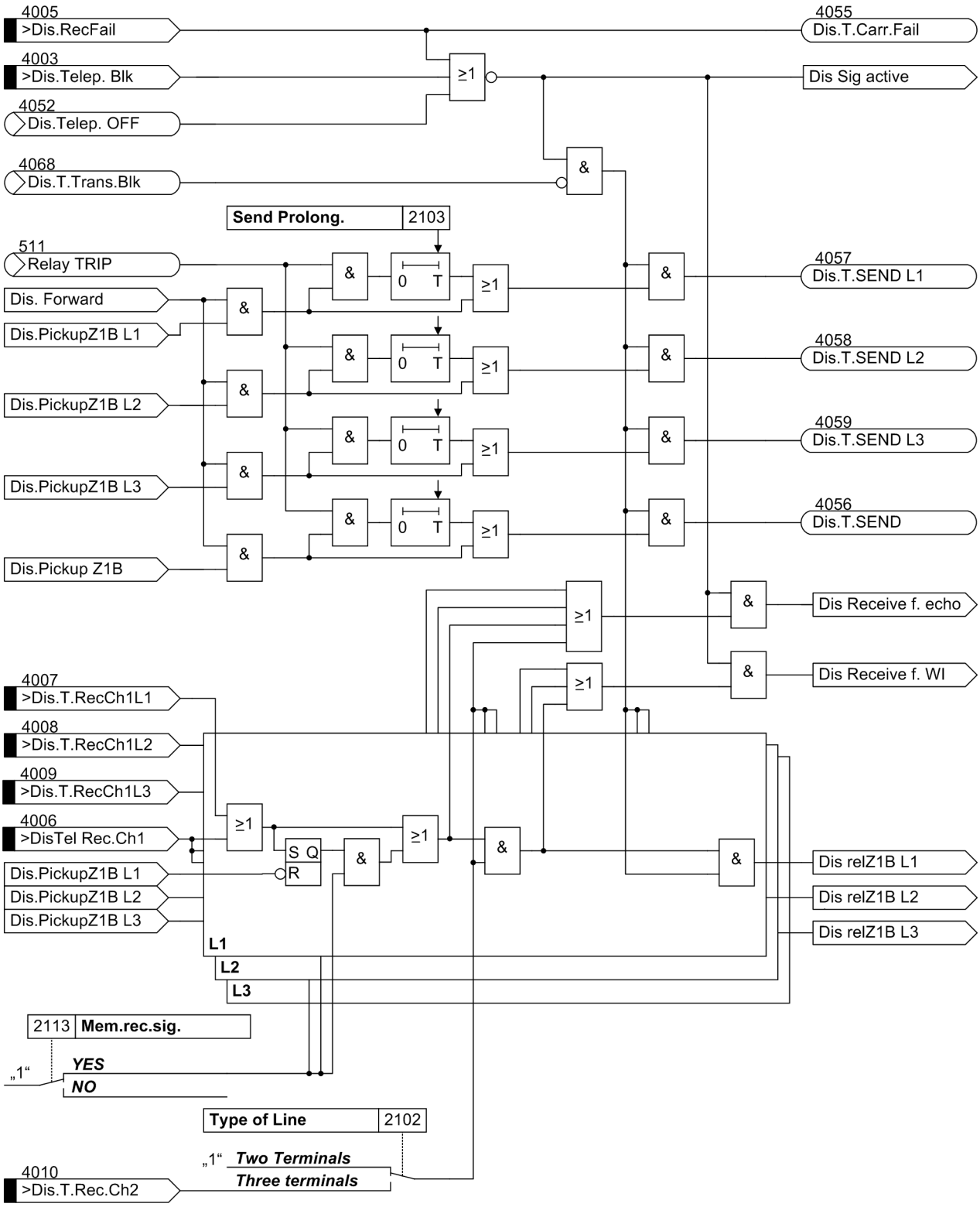

Figure 2-61 Logic diagram of the permissive overreach transfer trip (POTT) scheme (one line end, conventional, no protection data interface)

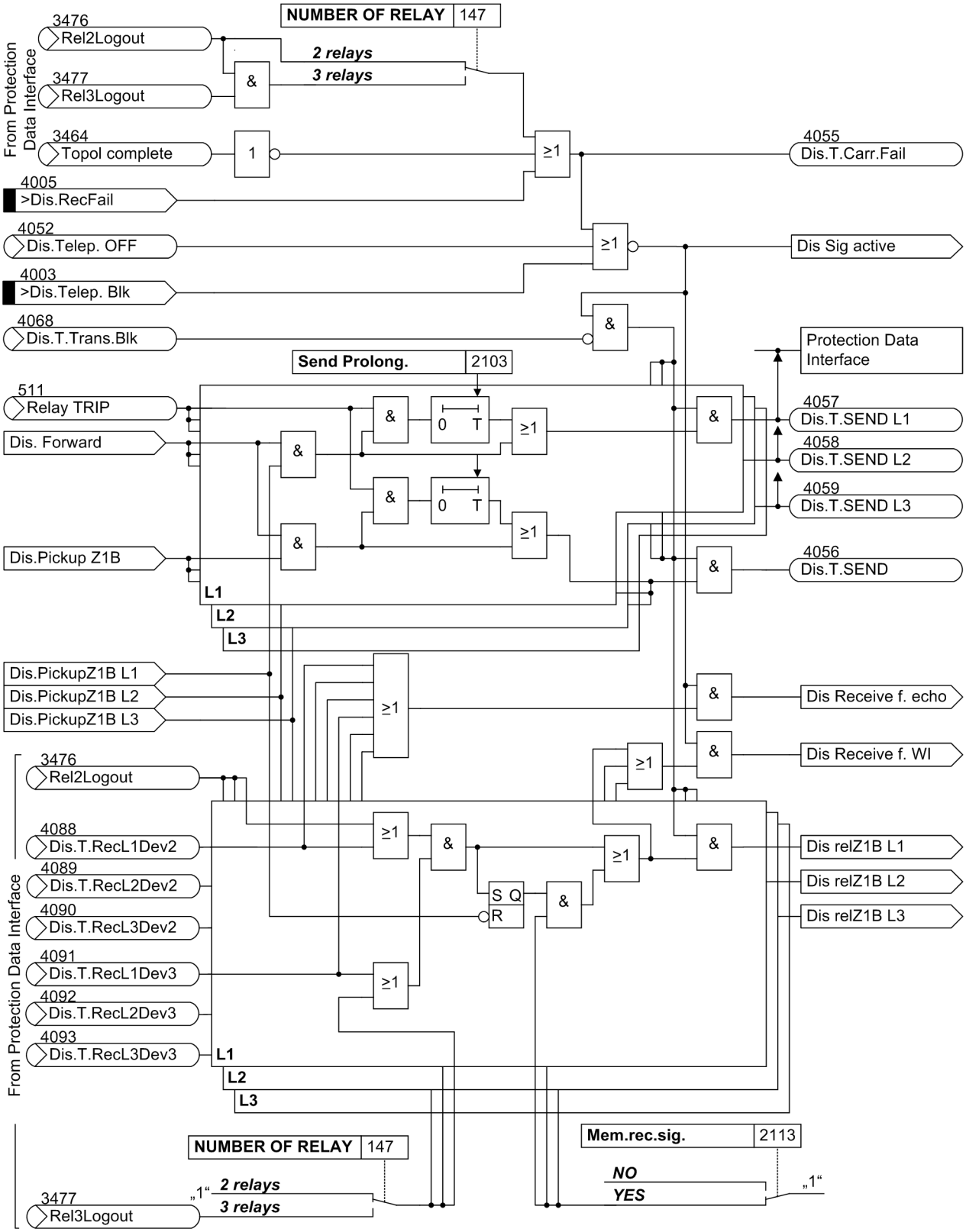

Figure 2-62 Logic diagram of the permissive overreach transfer trip (POTT) scheme (one line end, with protection data interface)

2.6.6 Unblocking Scheme

The following scheme is suited for conventional transmission media.

Principle

The unblocking method is a permissive release scheme. It differs from the permissive overreach transfer scheme in that tripping is possible also when no release signal is received from the opposite line end. It is therefore mainly used for long lines when the signal must be transmitted across the protected line by means of power line carrier (PLC) and the attenuation of the transmitted signal at the fault location may be so severe that reception at the other line end cannot necessarily be guaranteed. Here, a special unblocking logic takes effect.

The function scheme is shown in Figure 2-63.

Two signal frequencies which are keyed by the transmit output of the 7SA522 are required for the transmission. If the transmission device has a channel monitoring, then the monitoring frequency f_0 is keyed over to the working frequency f_U (unblocking frequency). When the protection recognizes a fault inside the overreaching zone Z1B, it initiates the transmission of the unblock frequency f_U. During the quiescent state or during a fault outside Z1B, or in the reverse direction, the monitoring frequency f_0 is transmitted.

If a release signal is also received from the opposite end, the trip signal is forwarded to the command relay. Accordingly, it is a prerequisite for fast tripping that the fault is recognised inside Z1B in forward direction at both line ends. The distance protection is set in such a way that overreaching zone Z1B reaches beyond the next station (approximately 120% of the line length). On three terminal lines, Z1B must be set to reliably reach beyond the longer line section, even if there is an additional infeed via the tee point. The first zone is set in accordance with the usual grading scheme, i.e. approximately 85% of the line length; on three terminal lines at least beyond the tee point.

The transmit signal can be prolonged by T_S (settable under address 2103 **`Send Prolong.`**). The prolongation of the send signal only comes into effect if the protection has already issued a trip command. This ensures release of the opposite line end even when the short-circuit has been switched off rapidly by the independent zone Z1.

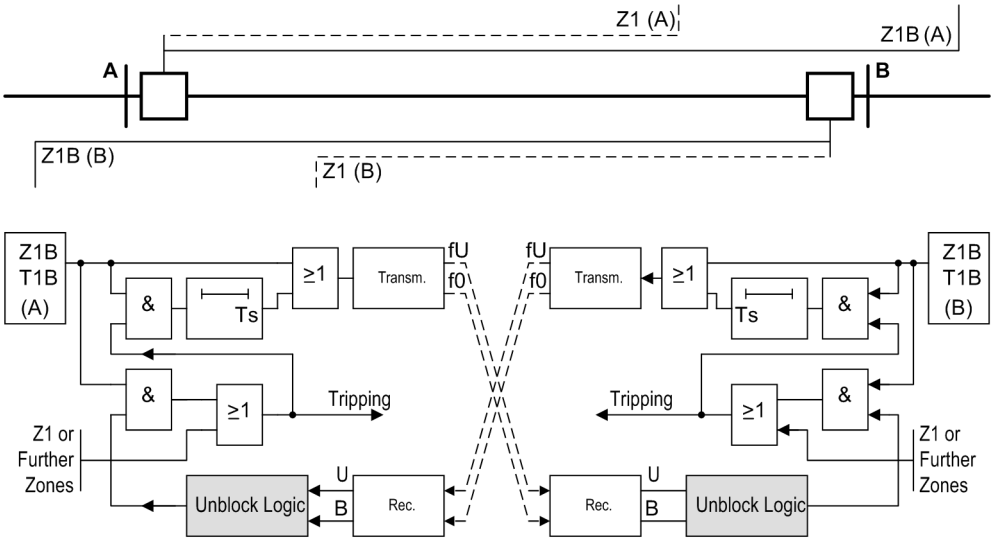

f0 - Off Frequency (Monitoring Frequency)
fU - Unblock Frequency (Send Frequency)
U - Unblocking Signal
B - Blocking Signal

Figure 2-63 Function diagram of the directional unblocking method

For all zones except Z1B, tripping without release from remote end is initiated, allowing the protection to function with the usual grading characteristic independent of the signal transmission.

Sequence

Figure 2-64 shows the logic diagram of the unblocking scheme for one line end.

The unblock scheme only functions for faults in the „forward“ direction. Accordingly, the overreaching zone Z1B of the distance protection must definitely be set to ***Forward***: in Address 1351 **Op. mode Z1B**, see also Subsection 2.2.1 at margin heading „Controlled Zone Z1B“.

On two terminal lines, the signal transmission may be phase segregated. In this case, send and receive circuits operate separately for each phase. On three terminal lines the send signal is transmitted to both opposite ends. The receive signals are then combined with a logical AND gate, as all three line ends must transmit a send signal during an internal fault. With the parameter **Type of Line** (address 2102) the device is informed as to whether it has one or two opposite line ends.

An unblock logic is inserted before the receive logic, which in essence corresponds to that of the permissive overreach transfer scheme, see Figure 2-65. If an interference free unblock signal is received, a receive signal, e.g. „>Dis.T.UB ub 1“, appears and the blocking signal, e.g. „>Dis.T.UB bl 1“ disappears. The internal signal „Unblock 1“ is passed on to the receive logic, where it initiates the release of the overreaching zone Z1B of the distance protection (when all remaining conditions have been fulfilled).

If the transmitted signal does not reach the other line end because the short-circuit on the protected feeder causes too much attenuation or reflection of the transmitted signal, neither the unblocking signal e.g., „>Dis.T.UB ub 1“, nor the blocking signal „>Dis.T.UB bl 1“ will appear on the receiving side. In this case, the release „Unblock 1“ is issued after a security delay time of 20 ms and passed onto the receive logic. This release is however removed after a further 100 ms via the timer stage 100/100 ms. When the transmission is functional again, one of the two receive signals must appear again, either „>Dis.T.UB ub 1“or „>Dis.T.UB bl 1“; after a further 100 ms (drop-off delay of the timer stage 100/100 ms) the quiescent state is reached again, i.e. the direct release path to the signal „Unblock L1“ and thereby the usual release is possible.

If none of the signals is received for a period of more than 10 s the alarm „Dis.T.UB Fail1“ is generated.

During disturbance of the signal transmission path, the overreaching zone Z1B may be activated by an automatic reclosure (internal or external) via the binary input „>Enable ARzones“.

The occurrence of erroneous signals resulting from transients during clearance of external faults or from direction reversal resulting during the clearance of faults on parallel lines, is neutralized by the „Transient Blocking“.

On feeders with single-sided infeed, the line end with no infeed cannot generate a release signal, as no fault detection occurs there. To achieve tripping by the directional unblocking scheme also in this case, the device features a special function. This „Weak Infeed Function“ (echo function) is described in Section „Measures for Weak and Zero Infeed“. It is activated when a signal is received from the opposite line end — in the case of three terminal lines from at least one of the opposite line ends — without the device having detected a fault.

The circuit breaker can also be tripped at the line end with no or only weak infeed. This „weak-infeed tripping“ is described in Section 2.9.2.

If the parameter **Mem.rec.sig.** (address 2113) is set to ***YES*** and an own distance protection pickup is available in Z1B, the phase-selective release effected via the signal extension is stored. If the own distance protection pickup in Z1B drops out, it will be deleted.

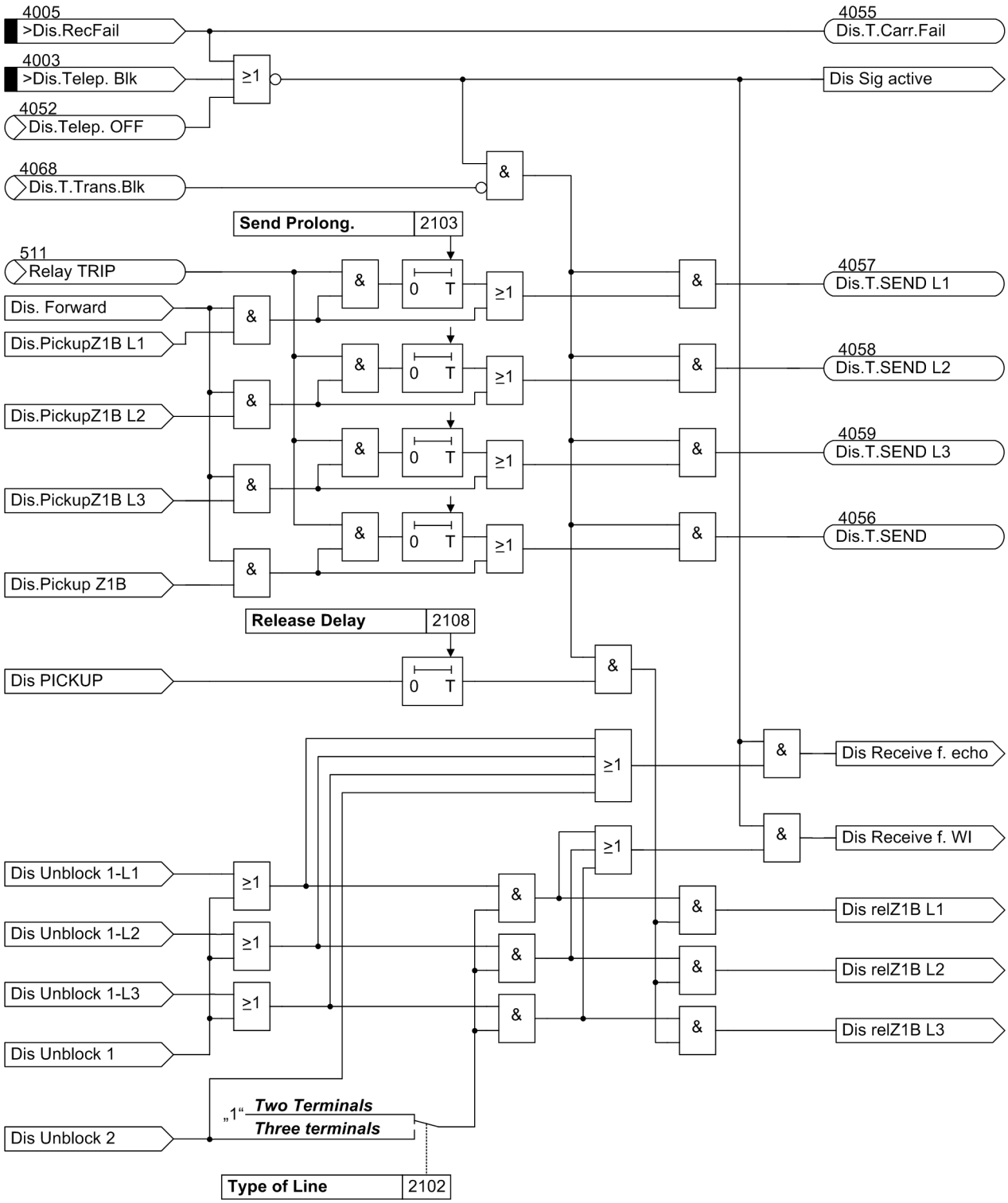

Figure 2-64 Send and enabling logic of the unblocking scheme

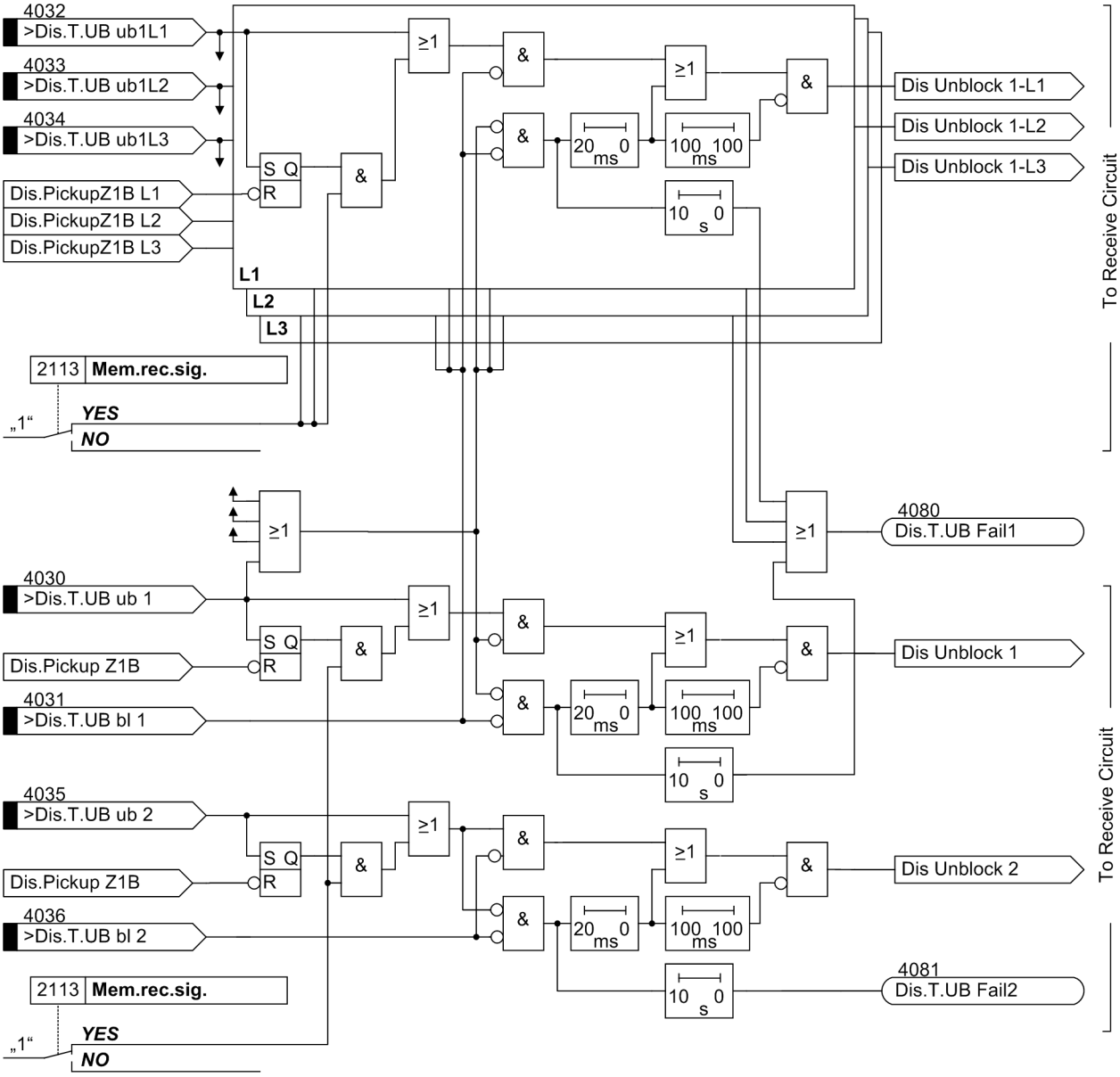

Figure 2-65 Unblock logic

2.6.7 Blocking Scheme

The following scheme is suited for conventional transmission media.

Principle

In the case of the blocking scheme, the transmission channel is used to send a block signal from one line end to the other. The signal is sent as soon as the protection detects a fault in reverse direction or immediately after occurrence of a fault (jump detector via dotted line in Figure 2-66). It is stopped immediately as soon as the distance protection detects a fault in forward direction. Tripping is possible with this scheme even if no signal is received from the opposite line end. It is therefore mainly used for long lines when the signal must be transmitted across the protected line by means of power line carrier (PLC) and the attenuation of the transmitted signal at the fault location may be so severe that reception at the other line end cannot necessarily be guaranteed.

The function scheme is shown in Figure 2-66.

Faults inside the overreaching zone Z1B, which is set to approximately 120% of the line length, will initiate tripping unless a blocking signal is received from the other line end. On three terminal lines, Z1B must be set to reliably reach beyond the longer line section, even if there is an additional infeed via the tee point. Due to possible differences in the pickup times of the devices at both line ends and due to the signal transmission time delay, the tripping must be somewhat delayed by T_V in this case.

To avoid signal race conditions, a transmit signal can be prolonged by the settable time $\mathbf{T_S}$ once it has been initiated.

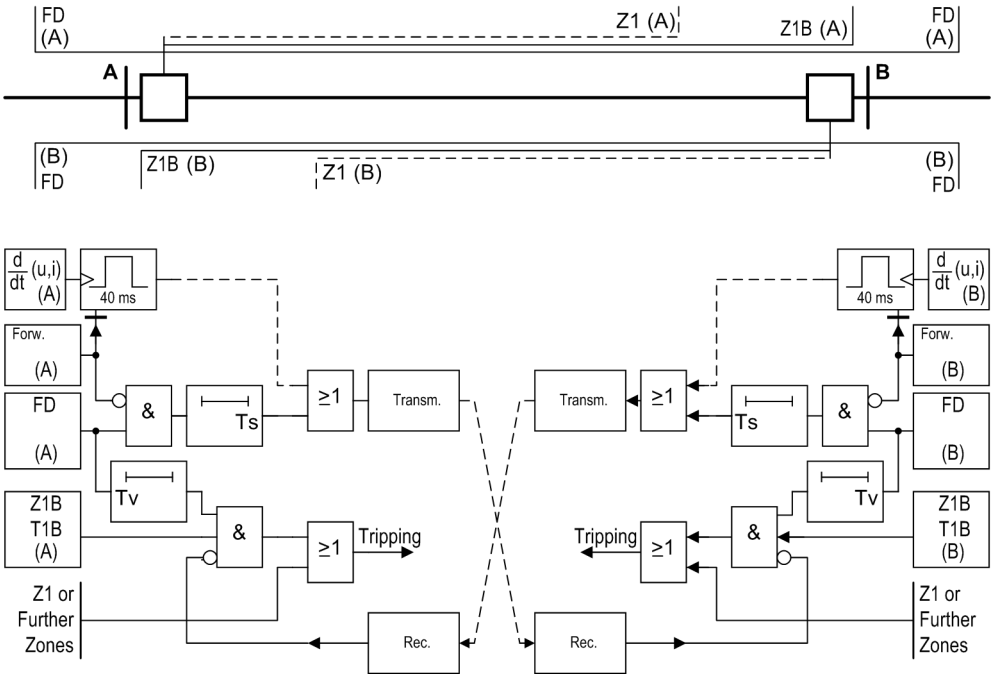

Figure 2-66 Function diagram of the blocking scheme

Sequence

Figure 2-67 shows the logic diagram of the blocking scheme for one line end.

The overreach zone Z1B is blocked which is why it must be set to ***Forward*** (address 1351 **Op. mode Z1B**, see also Section 2.2.1 at margin heading „Controlled Zone Z1B“).

On two terminal lines, the signal transmission may be phase segregated. In this case, send and receive circuits operate separately for each phase. On three terminal lines, the transmit signals are sent to both opposite line ends. The receive signals are then combined with a logical OR gate as no blocking signal must be received from any line end during an internal fault. With the parameter **Type of Line** (address 2102) the device is informed as to whether it has one or two opposite line ends.

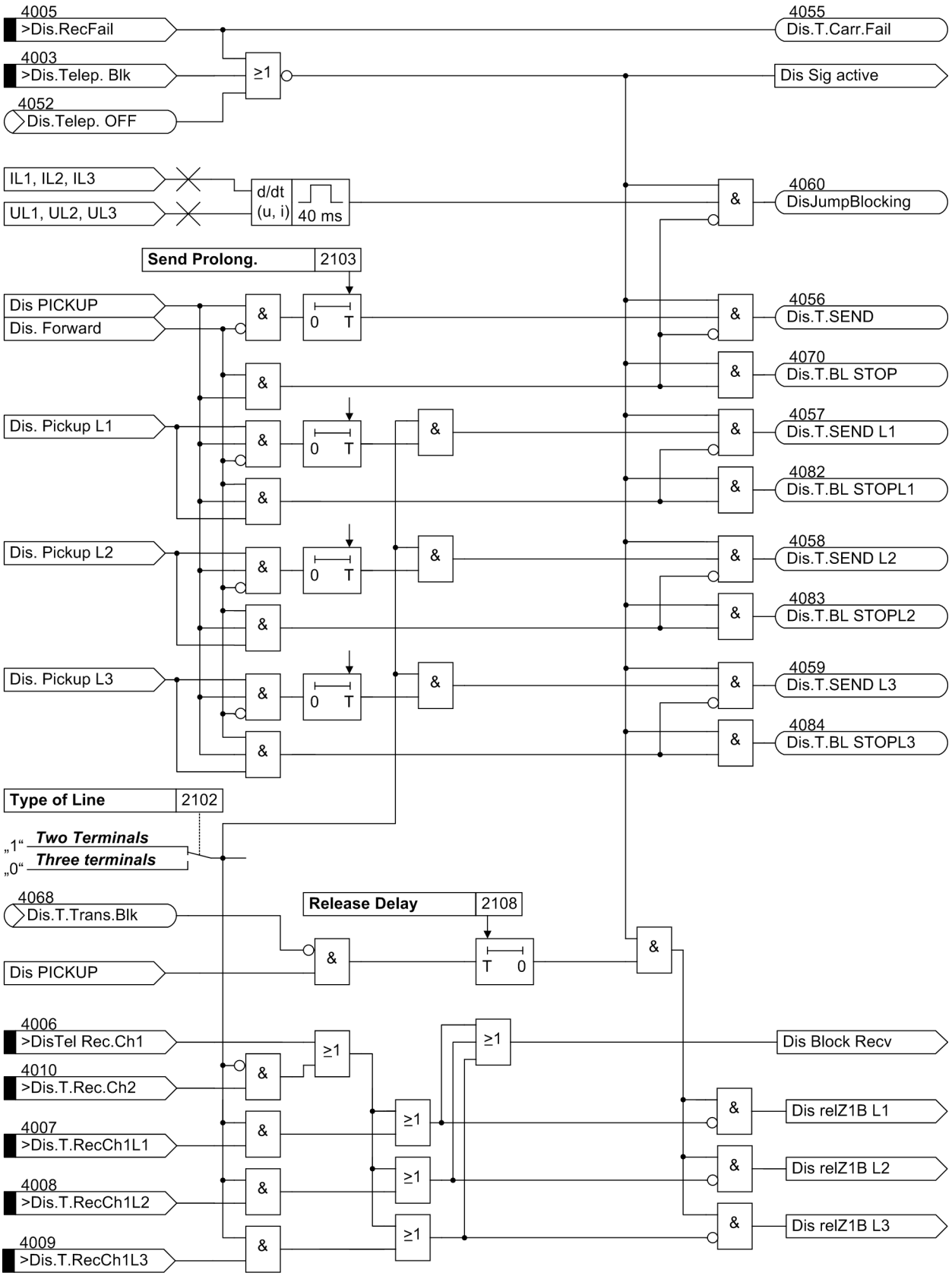

Figure 2-67 Logic diagram of the blocking scheme (one line end)

As soon as the distance protection has detected a fault in the reverse direction, a blocking signal is transmitted (e.g. „Dis.T.SEND“, No. 4056). The transmitted signal may be prolonged by setting address 2103 accordingly. The blocking signal is stopped if a fault is detected in the forward direction (e.g. „Dis.T.BL STOP“, No. 4070). Very rapid blocking is possible by transmitting also the output signal of the jump detector for measured values. To do so, the output„DisJumpBlocking“ (No. 4060) must also be allocated to the transmitter output relay. As this jump signal appears at every measured value jump, it should only be used if the transmission channel can be relied upon to respond promptly to the disappearance of the transmitted signal.

If there is a disturbance in the signal transmission path the overreaching zone can be blocked via a binary input. The distance protection operates with the usual time grading characteristic (non delayed trip in Z1). The overreach zone Z1B may, however, be activated by internal automatic reclosure or external criteria via the binary input „>Enable ARzones“.

The occurrence of erroneous signals resulting from transients during clearance of external faults or from direction reversal resulting during the clearance of faults on parallel lines is neutralised by „Transient blocking“. The received blocking signals also prolong the release by the transient blocking time **TrBlk BlockTime** (address 2110) if it has been present for at least the waiting time **TrBlk Wait Time** (address 2109), see Figure 2-68). After expiration of **TrBlk BlockTime** (address 2110) the delay time **Release Delay** (address 2108) is restarted.

The blocking scheme inherently allows even single-end fed short-circuits to be tripped rapidly without any special measures, as the non feeding end cannot generate a blocking signal.

2.6.8 Transient Blocking

In the overreach schemes, the transient blocking provides additional security against erroneous signals due to transients caused by clearance of an external fault or by fault direction reversal during clearance of a fault on a parallel line.

The principle of transient blocking scheme is that following the incidence of an external fault, the formation of a release signal is prevented for a certain (settable) time. In the case of permissive schemes, this is achieved by blocking of the transmit and receive circuit.

Figure 2-68 shows the principle of the transient blocking for a permissive scheme.

If, following fault detection, a non-directional fault or a fault in the reverse direction is determined within the waiting time **TrBlk Wait Time** (address 2109), the transmit circuit and the release of the overreaching zone Z1B are prevented. This blocking is maintained for the duration of the transient blocking time **TrBlk BlockTime** (address 2110) also after the reset of the blocking criterion. But if a trip command is already present in Z1, the transient blocking time **TrBlk BlockTime** is terminated and thus the blocking of the signal transmission scheme in the event of an internal fault is prevented.

In the case of the blocking scheme, the transient blocking also prolongs the received block signal as shown in the logic diagram Figure 2-68. After expiration of **TrBlk BlockTime** (address 2110) the delay time **Release Delay** (address 2108) is restarted.

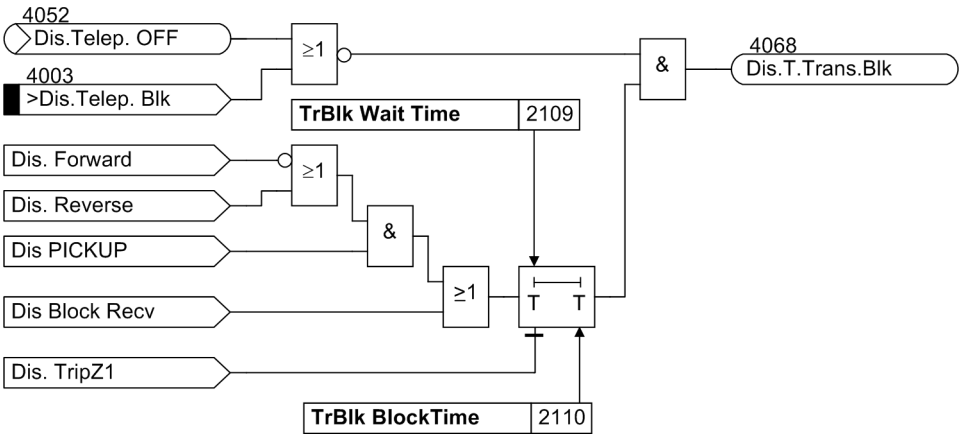

Figure 2-68 Transient blocking for permissive schemes

2.6.9 Measures for Weak or Zero Infeed

In cases where there is weak or no infeed present at one line end, the distance protection will not pick up. Neither a trip nor a send signal can therefore be generated there. With the comparison schemes, using a permissive signal, fast tripping could not even be achieved at the line end with strong infeed without special measures, as the end with weak infeed does not transmit a permissive release signal.

To achieve fast tripping at both line ends in such cases, the distance protection provides special supplements for feeders with weak infeed.

To enable the line end with the weak infeed condition to trip independently, 7SA522 has a special tripping function for weak infeed conditions. As this is a separate protection function with a dedicated trip command, it is described separately in Section 2.9.2.

Echo Function

If there is no fault detection at one line end, the echo function causes the received signal to be sent back to the other line end as an „echo“, where it is used to initiate permissive tripping.

The common echo signal (see Figure , Section 2.9.1) is triggered both by the distance protection and the earth fault protection. Figure 2-69 shows the initiation of an echo release by the distance protection.

The detection of the weak infeed condition and accordingly the requirement for an echo are combined in a central AND gate. The distance protection must neither be switched off nor blocked as it would otherwise always produce an echo due to the missing fault detection. If, however, the time delayed overcurrent protection is used as an emergency function, an echo is nevertheless possible if the distance protection is out of service because the fault detection of the emergency time overcurrent protection replaces the distance protection fault detection. During this mode the emergency time overcurrent protection must naturally not also be blocked or switched off.

Even when the emergency overcurrent protection does not pick up, an echo is created for permissive release scheme during emergency function. The time overcurrent protection at the weaker end must operate with more sensitivity than the distance protection at the end with high infeed. Otherwise, the selectivity concerning 100% of the line length is not given.

The essential condition for an echo is the absence of distance protection or overcurrent protection fault detection with the simultaneous reception of a signal from the teleprotection scheme logic, as shown in the corresponding logic diagrams (Figure 2-61, 2-62 or Figure 2-64).

When the distance protection picks up single-pole or two-pole, it is nevertheless possible to send an echo if the measurement of the phases that have not picked up has revealed weak infeed.

To prevent the generation of an echo signal after the line has been tripped and the fault detection has reset, it is not possible to generate an echo if a fault detection had already been present (RS flip-flop in Figure 2-69). The echo can in any event be blocked via the binary input „>Dis.T.BlkEcho“.

Figure 2-69 shows the creation of the echo release signal. As this function is related to the weak infeed tripping function, it is described separately (see Section 2.9.1).

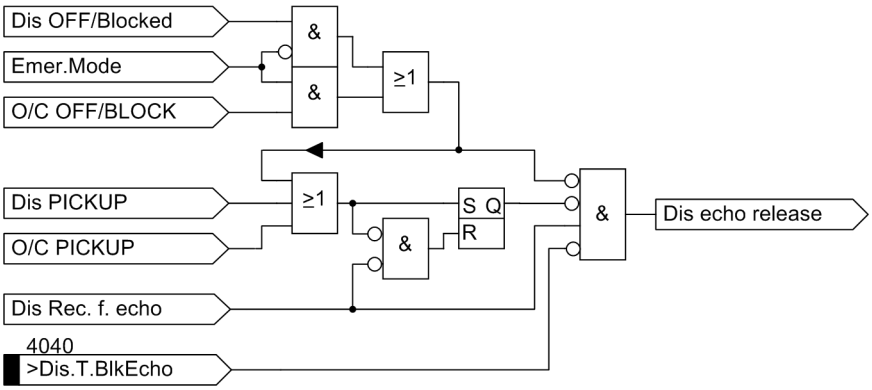

Figure 2-69 Generation of the echo release signal

2.6.10 Setting Notes

General

The teleprotection supplement of distance protection is only in service if it is set during the configuration to one of the possible modes of operation in address 121. Depending on this configuration, only those parameters which are applicable to the selected mode appear here. If the teleprotection supplement is not required the address 121 is set to **Teleprot. Dist.** = ***Disabled***.

Conventional transmission

The following modes are possible with conventional transmission links (as described in Subsection 2.6):

Direct Underreach Transfer Trip	Remote trip without any pickup,
PUTT (Z1B)	Permissive Underreach Transfer Trip with Zone Acceleration Z1B (PUTT)
POTT	Permissive Overreach Transfer Trip (POTT),
UNBLOCKING	Directional Unblocking scheme,
BLOCKING	Directional Blocking scheme.

At address 2101 **FCT Telep. Dis.** the use of a teleprotection scheme can be turned ***ON*** or ***OFF***.

If the teleprotection has to be applied to a three terminal line the setting in address 2102 must be **Type of Line** = ***Three terminals***, if not, the setting remains ***Two Terminals***.

Digital transmission

The following modes are possible with digital transmission using the protection data interface (described in Subsection 2.6):

PUTT (Z1B)	Permissive Underreach Transfer Trip with Zone Acceleration Z1B (PUTT)
POTT	Permissive Overreach Transfer Trip (POTT).

The desired mode is selected in address 2101 **FCT Telep. Dis.**. The use of a teleprotection scheme can also be turned ***OFF*** here. Address 147 **NUMBER OF RELAY** indicates the number of ends and must be set identically in all devices. The distance protection scheme via the protection data interface is only active if parameter 121 **Teleprot. Dist.** was set to ***SIGNALv.ProtInt*** for all devices in a constellation.

Distance Protection Prerequisites

For all applications of teleprotection schemes (except PUTT), it must be ensured that the fault detection of the distance protection in the reverse direction has a greater reach than the overreaching zone of the opposite line end (refer to the shaded areas in 2-70 on the right hand side)! To this end, at least one of the distance stages must be set to ***Reverse*** or ***Non-Directional***. During a fault in the shaded area (in the left section of the picture), this fault would be in zone Z1B of the protection at B as zone Z1B is set incorrectly. The distance protection at A would not pick up and therefore the protection in B would interpret this as a fault with single end infeed from B (echo from A or no block signal at A). This would result in a false trip!

The blocking scheme needs furthermore a fast reverse stage to generate the blocking signal. Apply zone 3 with non-delayed setting to this end.

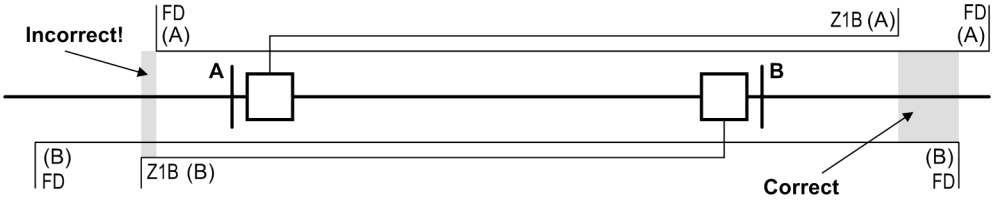

Figure 2-70 Distance protection setting with permissive overreach schemes

Time Settings

The send signal prolongation **Send Prolong.** (address 2103) must ensure that the send signal reliably reaches the opposite line end, even if there is very fast tripping at the sending line end and/or the signal transmission time is relatively long. In the case of the permissive overreaching schemes ***POTT*** and ***UNBLOCKING*** this signal prolongation time is only effective if the device has already issued a trip command. This ensures the release of the other line ends even if the short-circuit has been cleared very rapidly by the instantaneous zone Z1. In the case of the blocking scheme ***BLOCKING***, the transmit signal is always prolonged by this time. In this case, it corresponds to a transient blocking following a reverse fault. This setting is only possible via DIGSI at **Additional Settings**.

If the permissive release scheme ***UNBLOCKING*** is used, steady-state line faults can be detected. The output of such a fault can be delayed with the monitoring time **Delay for alarm** (address 2107). This parameter can only be set in DIGSI at **Display Additional Settings**.

With the release delay **Release Delay** (address 2108) the release of the zone Z1B can be delayed. This is only required for the blocking scheme ***BLOCKING*** to allow sufficient transmission time for the blocking signal during external faults. This delay only has an effect on the receive circuit of the teleprotection; conversely the permissive signal is not delayed by the set time delay T1B of the overreaching zone Z1B.

The parameter **Mem.rec.sig.** (address 2113) is only effective for the schemes ***PUTT (Z1B)*** with zone acceleration, ***POTT***, and ***UNBLOCKING***. If the parameter **Mem.rec.sig.** (address 2113) is set to ***YES*** and an own distance protection pickup is available in Z1B, the phase-selective release effected via the teleprotection scheme is stored. Storing the received signal makes sense if the teleprotection scheme is used in ring networks as a backup protection with increased grading time.

Transient blocking

The parameters **TrBlk Wait Time** and **TrBlk BlockTime** serve the transient blocking with the permissive (overreaching) schemes. With permissive underreach transfer trip schemes they are of no consequence.

The time **TrBlk Wait Time** (address 2109) is a waiting time prior to transient blocking. The transient blocking will be activated in the permissive overreach transfer schemes only after the distance protection has not detected a fault in forward direction within this time after fault detection. In the case of the blocking scheme, the waiting time prevents transient blocking in the event that the blocking signal reception from the opposite line end is very fast. With the setting ∞ there is no transient blocking. This parameter can only be changed in DIGSI at **Display Additional Settings**.

Note

With ***POTT*** and ***UNBLOCKING*** schemes, the **TrBlk Wait Time** must not be set too short to prevent unwanted activation of the transient blocking **TrBlk BlockTime** when the direction measurement is delayed compared to the function pickup (signal transients). A setting of 10 ms to 40 ms is generally applicable depending on the operating (tripping) time of the relevant circuit breaker on the parallel line.

It is absolutely necessary that the transient blocking time **TrBlk BlockTime** (address 2110) is longer than the duration of transients resulting from the inception or clearance of external short circuits. During this time the send signal is blocked for the permissive overreach schemes ***POTT*** and ***UNBLOCKING*** if the protection had initially detected a reverse fault. In the case of blocking scheme ***BLOCKING***, the blocking of the Z1B release is prolonged by this time by both the detection of a reverse fault and the (blocking) received signal. After expiration of **TrBlk BlockTime** (address 2110) the delay time **Release Delay** (address 2108) is restarted for the blocking scheme. Since the blocking scheme always requires setting the delay time **Release Delay**, the transient blocking time **TrBlk BlockTime** (address 2110) can usually be set very short. This parameter can only be altered with DIGSI under **Additional Settings**.

Where the teleprotection schemes of the distance protection and earth fault protection share the same channel, **DIS TRANSBLK EF** (address 2112) should be set to ***YES***. This blocks also the distance protection if an external fault was previously detected by the earth fault protection only.

Echo Function

The echo function settings are common to all weak infeed measures and summarized in tabular form in Section 2.9.2.2.

Note

The „ECHO SIGNAL“ (No. 4246) must be allocated separately to the output relays for the transmitter actuation, as it is not contained in the transmit signals of the transmission functions. On the digital protection data interface with permissive overreach transfer trip mode, the echo is transmitted as a separate signal without taking any special measures.

2.6.11 Settings

Addresses which have an appended "A" can only be changed with DIGSI, under Additional Settings.

Addr.	Parameter	Setting Options	Default Setting	Comments
2101	FCT Telep. Dis.	ON PUTT (Z1B) POTT OFF	ON	Teleprotection for Distance protection
2102	Type of Line	Two Terminals Three terminals	Two Terminals	Type of Line
2103A	Send Prolong.	0.00 .. 30.00 sec	0.05 sec	Time for send signal prolongation
2107A	Delay for alarm	0.00 .. 30.00 sec	10.00 sec	Time Delay for Alarm
2108	Release Delay	0.000 .. 30.000 sec	0.000 sec	Time Delay for release after pickup
2109A	TrBlk Wait Time	0.00 .. 30.00 sec; ∞	0.04 sec	Transient Block.: Duration external flt.
2110A	TrBlk BlockTime	0.00 .. 30.00 sec	0.05 sec	Transient Block.: Blk.T. after ext. flt.
2112A	DIS TRANSBLK EF	YES NO	YES	DIS transient block by EF
2113	Mem.rec.sig.	YES NO	NO	Memorize receive signal

2.6.12 Information List

No.	Information	Type of Information	Comments
4001	>Dis.Telep. ON	SP	>Distance Teleprotection ON
4002	>Dis.Telep.OFF	SP	>Distance Teleprotection OFF
4003	>Dis.Telep. Blk	SP	>Distance Teleprotection BLOCK
4005	>Dis.RecFail	SP	>Dist. teleprotection: Carrier faulty
4006	>DisTel Rec.Ch1	SP	>Dis.Tele. Carrier RECEPTION Channel 1
4007	>Dis.T.RecCh1L1	SP	>Dis.Tele.Carrier RECEPTION Channel 1,L1
4008	>Dis.T.RecCh1L2	SP	>Dis.Tele.Carrier RECEPTION Channel 1,L2
4009	>Dis.T.RecCh1L3	SP	>Dis.Tele.Carrier RECEPTION Channel 1,L3
4010	>Dis.T.Rec.Ch2	SP	>Dis.Tele. Carrier RECEPTION Channel 2
4030	>Dis.T.UB ub 1	SP	>Dis.Tele. Unblocking: UNBLOCK Channel 1
4031	>Dis.T.UB bl 1	SP	>Dis.Tele. Unblocking: BLOCK Channel 1
4032	>Dis.T.UB ub1L1	SP	>Dis.Tele. Unblocking: UNBLOCK Ch. 1, L1
4033	>Dis.T.UB ub1L2	SP	>Dis.Tele. Unblocking: UNBLOCK Ch. 1, L2
4034	>Dis.T.UB ub1L3	SP	>Dis.Tele. Unblocking: UNBLOCK Ch. 1, L3
4035	>Dis.T.UB ub 2	SP	>Dis.Tele. Unblocking: UNBLOCK Channel 2
4036	>Dis.T.UB bl 2	SP	>Dis.Tele. Unblocking: BLOCK Channel 2
4040	>Dis.T.BlkEcho	SP	>Dis.Tele. BLOCK Echo Signal
4050	Dis.T.on/off BI	IntSP	Dis. Teleprotection ON/OFF via BI
4052	Dis.Telep. OFF	OUT	Dis. Teleprotection is switched OFF
4054	Dis.T.Carr.rec.	OUT	Dis. Telep. Carrier signal received
4055	Dis.T.Carr.Fail	OUT	Dis. Telep. Carrier CHANNEL FAILURE
4056	Dis.T.SEND	OUT	Dis. Telep. Carrier SEND signal
4057	Dis.T.SEND L1	OUT	Dis. Telep. Carrier SEND signal, L1
4058	Dis.T.SEND L2	OUT	Dis. Telep. Carrier SEND signal, L2
4059	Dis.T.SEND L3	OUT	Dis. Telep. Carrier SEND signal, L3
4060	DisJumpBlocking	OUT	Dis.Tele.Blocking: Send signal with jump
4068	Dis.T.Trans.Blk	OUT	Dis. Telep. Transient Blocking
4070	Dis.T.BL STOP	OUT	Dis. Tele.Blocking: carrier STOP signal
4080	Dis.T.UB Fail1	OUT	Dis. Tele.Unblocking: FAILURE Channel 1
4081	Dis.T.UB Fail2	OUT	Dis. Tele.Unblocking: FAILURE Channel 2
4082	Dis.T.BL STOPL1	OUT	DisTel Blocking: carrier STOP signal, L1
4083	Dis.T.BL STOPL2	OUT	DisTel Blocking: carrier STOP signal, L2
4084	Dis.T.BL STOPL3	OUT	DisTel Blocking: carrier STOP signal, L3
4085	Dis.T.RecL1Dev1	OUT	Dis.Tele.Carrier RECEPTION, L1, Device1
4086	Dis.T.RecL2Dev1	OUT	Dis.Tele.Carrier RECEPTION, L2, Device1
4087	Dis.T.RecL3Dev1	OUT	Dis.Tele.Carrier RECEPTION, L3, Device1
4088	Dis.T.RecL1Dev2	OUT	Dis.Tele.Carrier RECEPTION, L1, Device2
4089	Dis.T.RecL2Dev2	OUT	Dis.Tele.Carrier RECEPTION, L2, Device2
4090	Dis.T.RecL3Dev2	OUT	Dis.Tele.Carrier RECEPTION, L3, Device2
4091	Dis.T.RecL1Dev3	OUT	Dis.Tele.Carrier RECEPTION, L1, Device3
4092	Dis.T.RecL2Dev3	OUT	Dis.Tele.Carrier RECEPTION, L2, Device3
4093	Dis.T.RecL3Dev3	OUT	Dis.Tele.Carrier RECEPTION, L3, Device3

2.7 Earth fault overcurrent protection in earthed systems (optional)

In earthed systems, where extremely large fault resistances may exist during earth faults (e.g. overhead lines without earth wire, sandy soil) the fault detection of the distance protection will often not pick up because the resulting earth fault impedance could be outside the fault detection characteristic of the distance protection.

The 7SA522 distance protection features protection functions for high-resistance earth faults in earthed power systems. These options are available — partly depending on the ordered version:

Three overcurrent stages with definite time tripping characteristic (definite time),

– One overcurrent stage with inverse time characteristic (IDMT) or

– One zero-sequence voltage stage with inverse time characteristic

– One zero-sequence power stage with inverse time characteristic

The stages may be configured independently of each other and combined according to the user's requirements. If the fourth current, voltage or power dependent stage is not required, it may be employed as a fourth definite time stage.

Each stage may be set to non directional or directional — forward or reverse. For each stage it can be determined if it should cooperate with the teleprotection function. If the protection is applied in the proximity of transformers, an inrush restraint can be activated. Furthermore, blocking by external criteria is possible via binary inputs (e.g. for reverse interlocking or external automatic reclosure). During energisation of the protected feeder onto a dead fault it is also possible to release any one stage or several stages for non-delayed tripping. Stages that are not required, are disabled.

2.7.1 Functional Description

Measured Quantities

The zero-sequence current is used as measured variable. According to its definition equation it is obtained from the sum of the three phase currents, i.e. $3 \cdot \underline{I}_0 = \underline{I}_{L1} + \underline{I}_{L2} + \underline{I}_{L3}$. Depending on the version ordered, and the configured application for the fourth current input I_4 of the device, the zero-sequence current can be measured or calculated.

If input I_4 is connected in the starpoint of the set of current transformers or to a separate earth current transformer on the protected feeder, the earth current is directly available as a measured value.

If the device is fitted with the highly sensitive current input for I_4, this current I_4 is used when allocated and takes the set factor **`I4/Iph CT`** into consideration (address 221, see section 2.1.2.1). As the linear range of this measuring input is restricted considerably in the high range, this current is only evaluated up to an amplitude of approx. 1.6 A. In the event of larger currents, the device automatically switches over to the evaluation of the zero-sequence current derived from the phase currents. Naturally, all three phase currents obtained from a set of three star-connected current transformers must be available and connected to the device. The processing of the earth current is then also possible if very small as well as large earth fault currents occur.

If the fourth current input I_4 is otherwise utilized, e.g. for a transformer starpoint current or for the earth current of a parallel line, the device calculates the zero-sequence current from the phase currents. Naturally in this case also all three phase currents derived from a set of three star connected current transformers must be available and connected to the device.

The zero-sequence voltage is determined by its defining equation $3 \cdot \underline{U}_0 = \underline{U}_{L1-E} + \underline{U}_{L2-E} + \underline{U}_{L3-E}$. The zero-sequence voltage is measured or calculated depending on the application of the fourth voltage input U_4 of the device. If the fourth voltage input is connected to the open delta winding U_{delta} of a voltage transformer set and if it is configured accordingly (address 210 **U4 transformer** = ***Udelta transf.***, see Section 2.1.2.1), this voltage is used considering the factor **Uph / Udelta** (address 211, see Section 2.1.2.1). If not, the device calculates the zero-sequence voltage from the phase voltages. Naturally, all three phase-to-earth voltages obtained from a set of three star-connected voltage transformers must be available and connected to the device.

Definite time very high set current stage $3I_0$>>>

The triple zero-sequence current $3\ I_0$ is passed through a numerical filter and then compared with the set value **3IO>>>**. If this value is exceeded an alarm is issued. After the corresponding delay time **T 3IO>>>** has expired, a trip command is issued which is also alarmed. The reset threshold is approximately 95 % of the pickup threshold.

Figure 2-71 shows the logic diagram of the $3I_0$>>> stage. The function blocks „direction determination“, „permissive teleprotection“ and the generation of the signals „Line closure“ and „EF Inrush“ are common to all stages and described below. They may, however, affect each stage individually. This is accomplished with the following setting parameters:

- **Op. mode 3IO>>>**, determines the operating direction of the stage: ***Forward***, ***Reverse***, ***Non-Directional*** or ***Inactive***,
- **3IO>>> Telep/BI** determines whether a non-delayed trip with the teleprotection scheme or via binary input 1310 „>EF InstTRIP“ is possible (***YES***) or not (***NO***),
- **3IO>>>SOTF-Trip**, determines whether during switching onto a fault tripping shall be instantaneous (***YES***) or not (***NO***) with this stage.
- **3IO>>>InrushBlk** which is used to switch the inrush stabilization (rush blocking) on (***YES***) or off (***NO***).

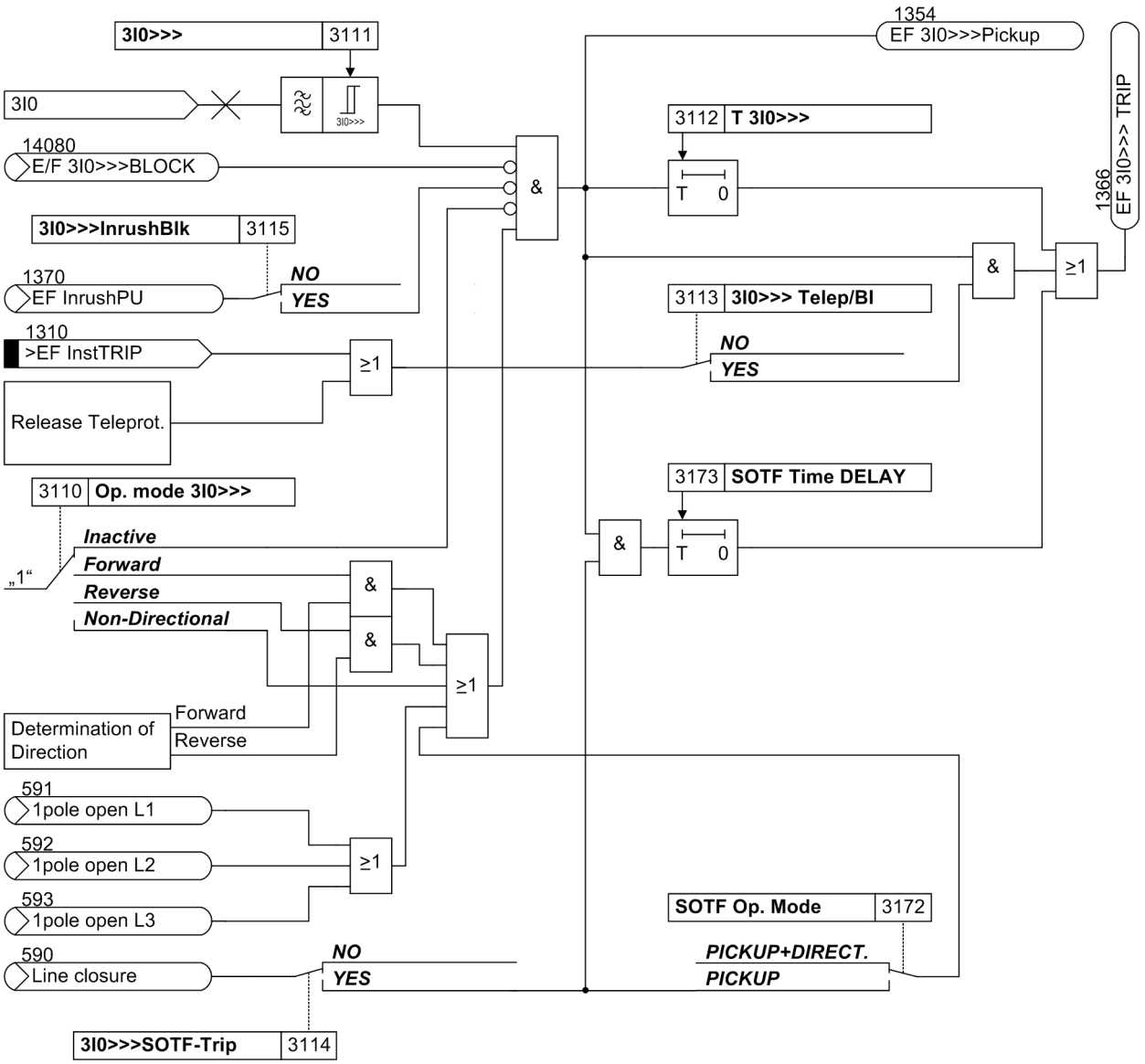

Figure 2-71 Logic diagram of the $3I_0$>>> stage

Definite time high set current stage $3I_0$>>

The logic of the high-set current stage $3I_0$>> is the same as that of the $3I_0$>>> stage. In all references **3I0>>>** must merely be replaced with **3I0>>**. In all other respects Figure 2-71 applies.

Definite time overcurrent stage $3I_0$>

The logic of the overcurrent stage $3I_0$>, too, is the same as that of the $3I_0$>>> stage. In all references **3I0>>>** must merely be replaced with **3I0>**. In all other respects Figure 2-71 applies. This stage operates with a specially optimized digital filter that completely suppresses all harmonic components beginning with the 2nd harmonic. Therefore it is particularly suited for a highly-sensitive earth fault detection.

A fourth definite-time stage can be implemented by setting the „inverse-time“ stage (refer to the next paragraph) to definite-time stage.

Inverse time overcurrent stage $3I_{0P}$

The logic of the stage with inverse time delay operates in the same way as the remaining stages. This stage operates with a specially optimized digital filter that completely suppresses all harmonic components beginning with the 2nd harmonic. Therefore it is particularly suited for a highly-sensitive earth fault detection. However, the time delay is calculated here based on the type of the set characteristic, the intensity of the earth current and a time multiplier **3IOp Time Dial** (IEC characteristic, Figure 2-72) or a time multiplier **TimeDial TD3IOp** (ANSI characteristic). A pre-selection of the available characteristics was already carried out during the configuration of the protection functions. Furthermore, an additional fixed delay **Add.T-DELAY** may be selected. The characteristics are shown in the Technical Data.

Fig. 2-72 shows the logic diagram. The setting addresses of the IEC characteristics are shown by way of an example. In the setting information the different setting addresses are described in detail.

It is also possible to implement this stage equally with a definite time delay. In this case **3IOp PICKUP** is the pickup threshold and **Add.T-DELAY** the definite time delay. The inverse time characteristic is then effectively bypassed.

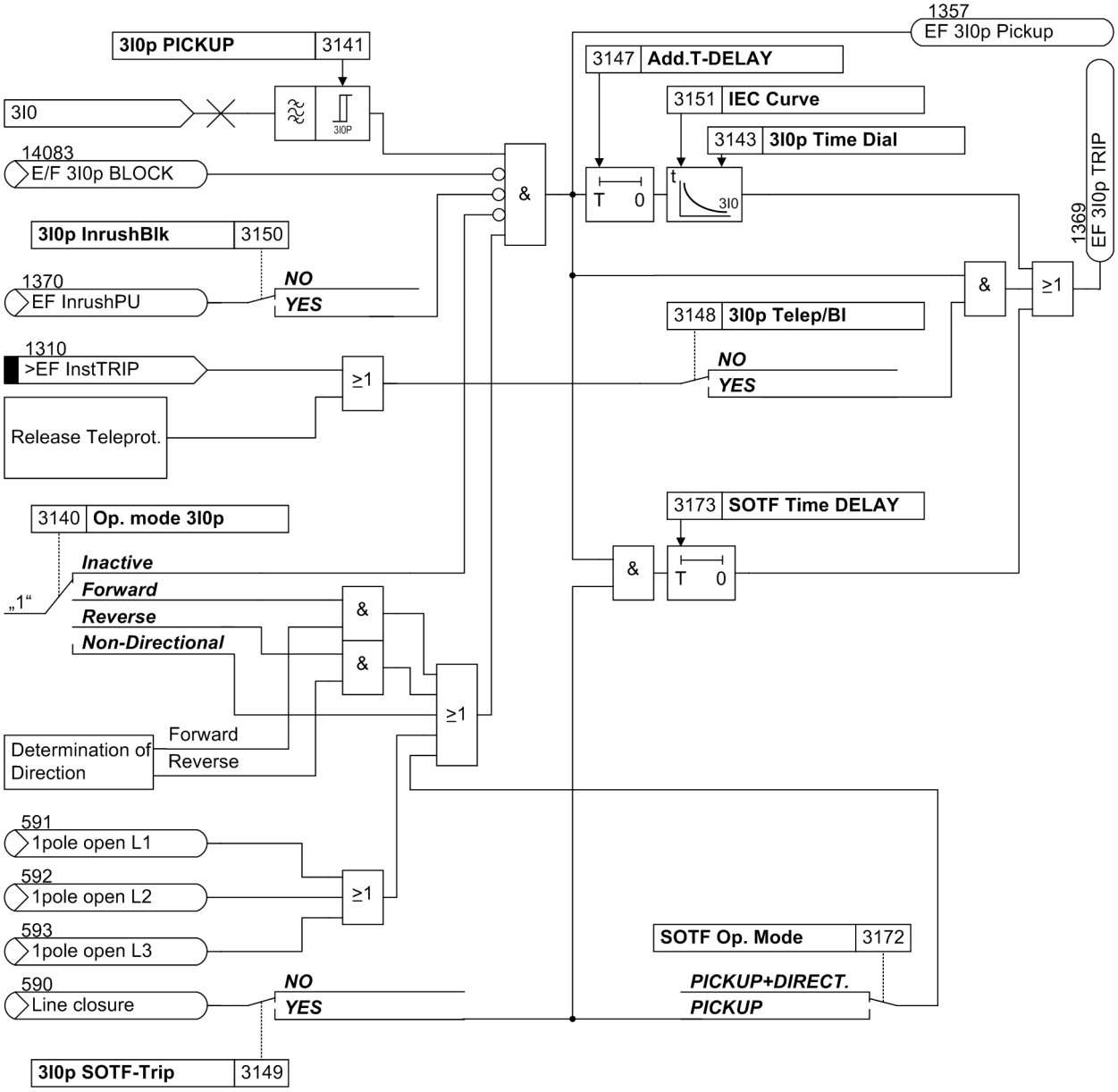

Figure 2-72 Logic diagram of the $3I_{0P}$ stage (inverse time overcurrent protection), example for IEC characteristics

Inverse time overcurrent stage with logarithmic inverse characteristic

The inverse logarithmic characteristic differs from the other inverse characteristics mainly by the fact that the shape of the curve can be influenced by a number of parameters. The slope and a time shift **3I0p MaxT-DELAY** which directly affect the curve, can be changed. The characteristics are shown in the Technical Data.

Figure 2-73 shows the logic diagram. In addition to the curve parameters, a minimum time **3I0p MinT-DELAY** can be determined; below this time no tripping can occur. Below a current factor of **3I0p Startpoint**, which is set as a multiple of the basic setting **3I0p PICKUP**, no tripping can take place.

Further information regarding the effect of the various parameters can be found in the setting information of the function parameters in Section 2.7.2.

The remaining setting options are the same as for the other curves.

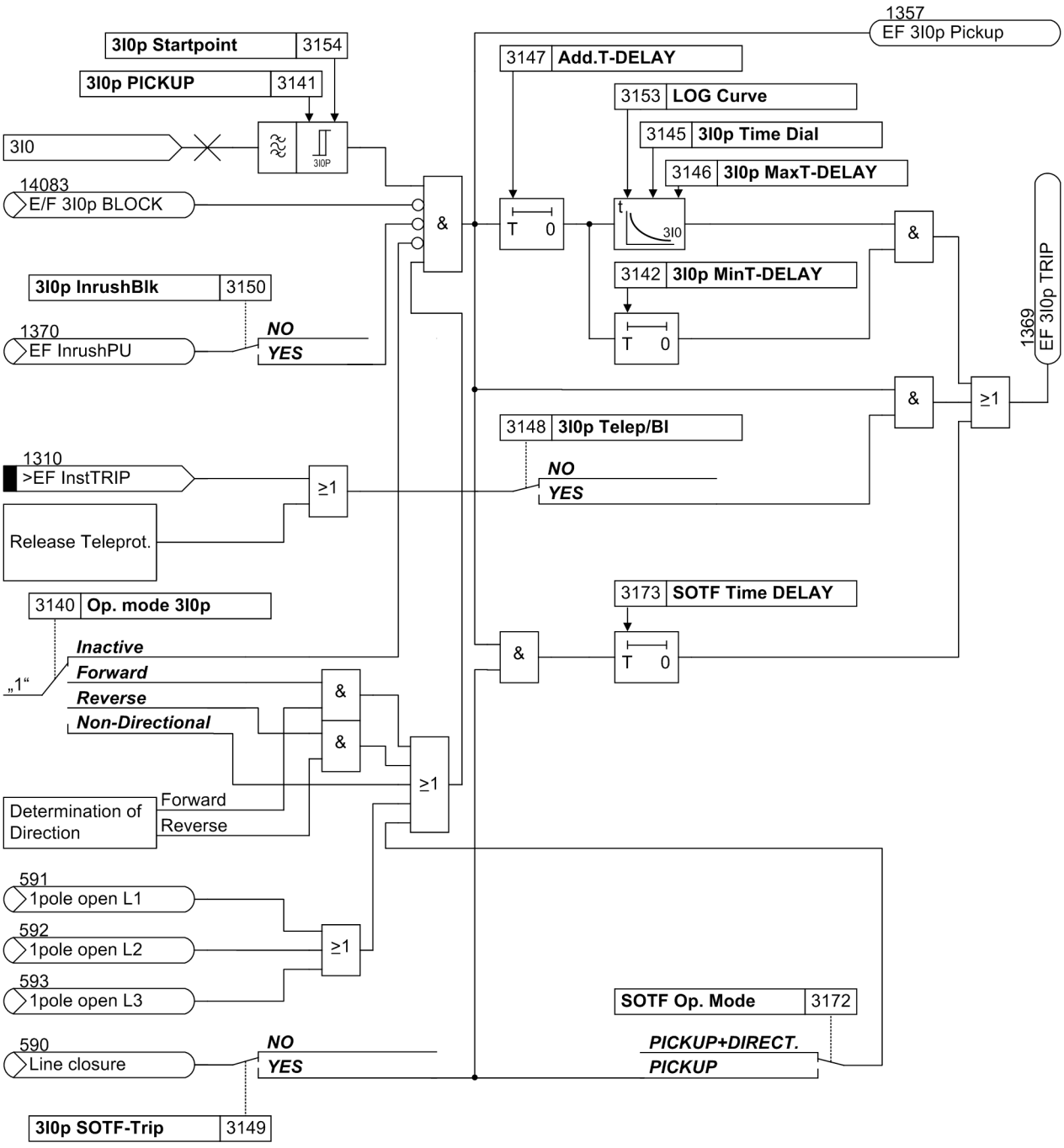

Figure 2-73 Logic diagram of the $3I_{0P}$ stage for the inverse logarithmic characteristic

Zero-sequence voltage time protection (U_0 inverse)

The zero-sequence voltage time protection operates according to a voltage-dependent trip time characteristic. It can be used instead of the time overcurrent stage with inverse time delay.

The voltage/time characteristic can be displaced in voltage direction by a constant voltage (**`UOinv. minimum`**, valid for t → ∞) and in time direction by a constant time (**`T forw. (UOinv)`**). The characteristics are shown in the Technical Data.

Figure 2-74 shows the logic diagram. The tripping time depends on the level of the zero-sequence voltage U_0. For meshed earthed systems the zero-sequence voltage increases towards the earth fault location. The inverse characteristic results in the shortest command time for the relay closest to the fault. The other relays then reset.

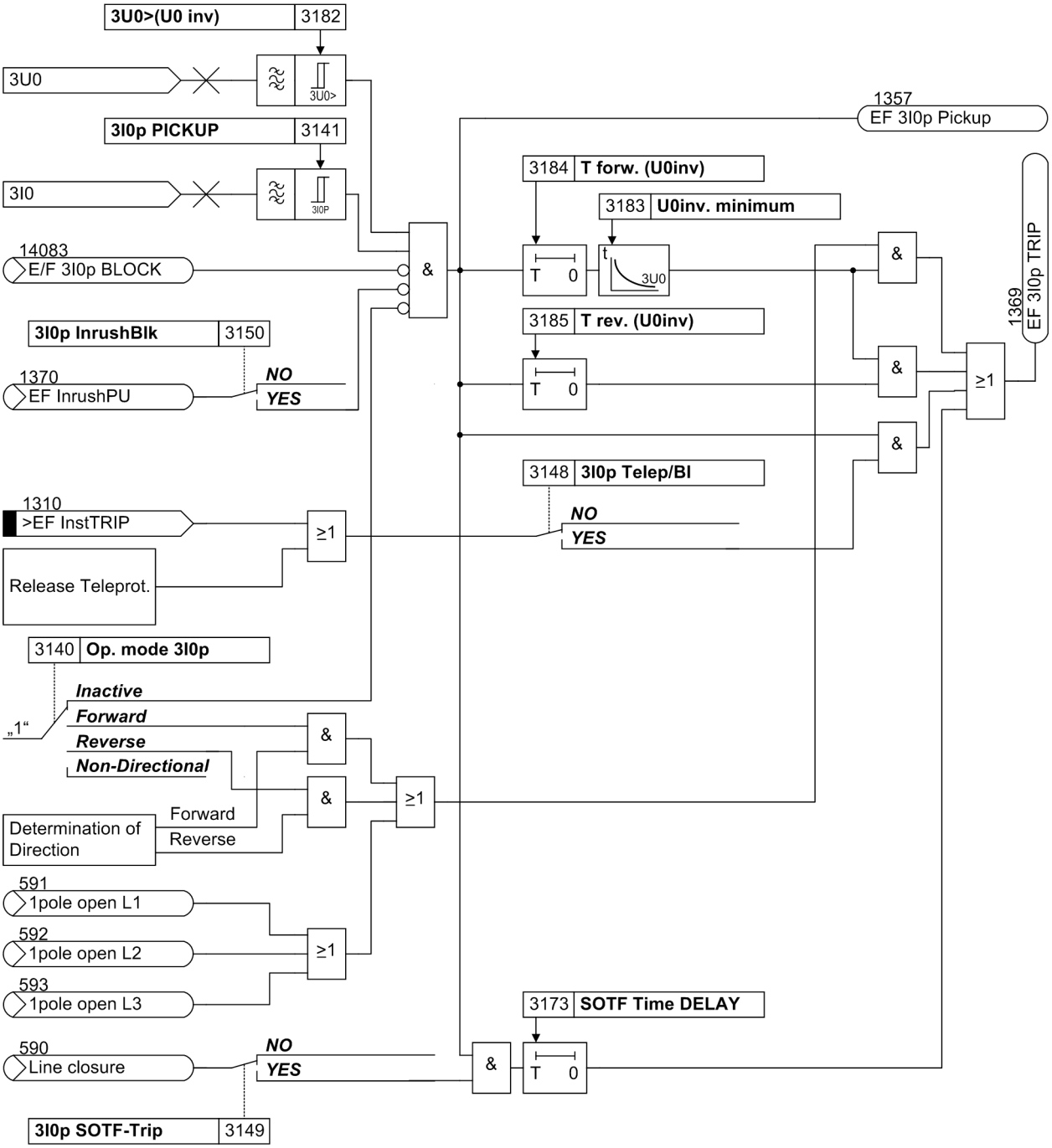

Figure 2-74 Directional zero-sequence voltage time protection with non-directional backup stage

A further time stage **`T rev. (U0inv)`** provokes non-directional tripping with a voltage-independent delay. This stage can be set above the directional stage. When tripping with this stage it is, however, a prerequisite that the time of the voltage-controlled stage has already expired (without directional check). In case the zero-sequence voltage is too low or the voltage transformer circuit breaker is tripped, this stage is also disabled.

Zero-sequence power protection

The zero-sequence power protection operates according to a power-dependent trip time characteristic. It can be used instead of an inverse time overcurrent stage.

The power is calculated from the zero-sequence voltage and the zero-sequence current. The component S_r is decisive in direction of a configurable compensation angle φ_{comp}, which is also referred to as compensated zero-sequence power, i.e.

$$S_r = 3I_0 \cdot 3U_0 \cdot \cos(\varphi - \varphi_{Comp})$$

where $\varphi = \angle (U_0; I_0)$. φ_{Comp} thus determines the direction of the maximum sensitivity ($\cos(\varphi - \varphi_{Comp}) = 1$ if $\varphi = \varphi_{Comp}$). Due to its sign information the power calculation automatically includes the direction. The power for the reverse direction can be determined by reversing the sign.

The power-time characteristic can be displaced in power direction via a reference value S_{ref} (= basic value for the inverse characteristic for $\varphi = \varphi_{comp}$) and in time direction by a factor k.

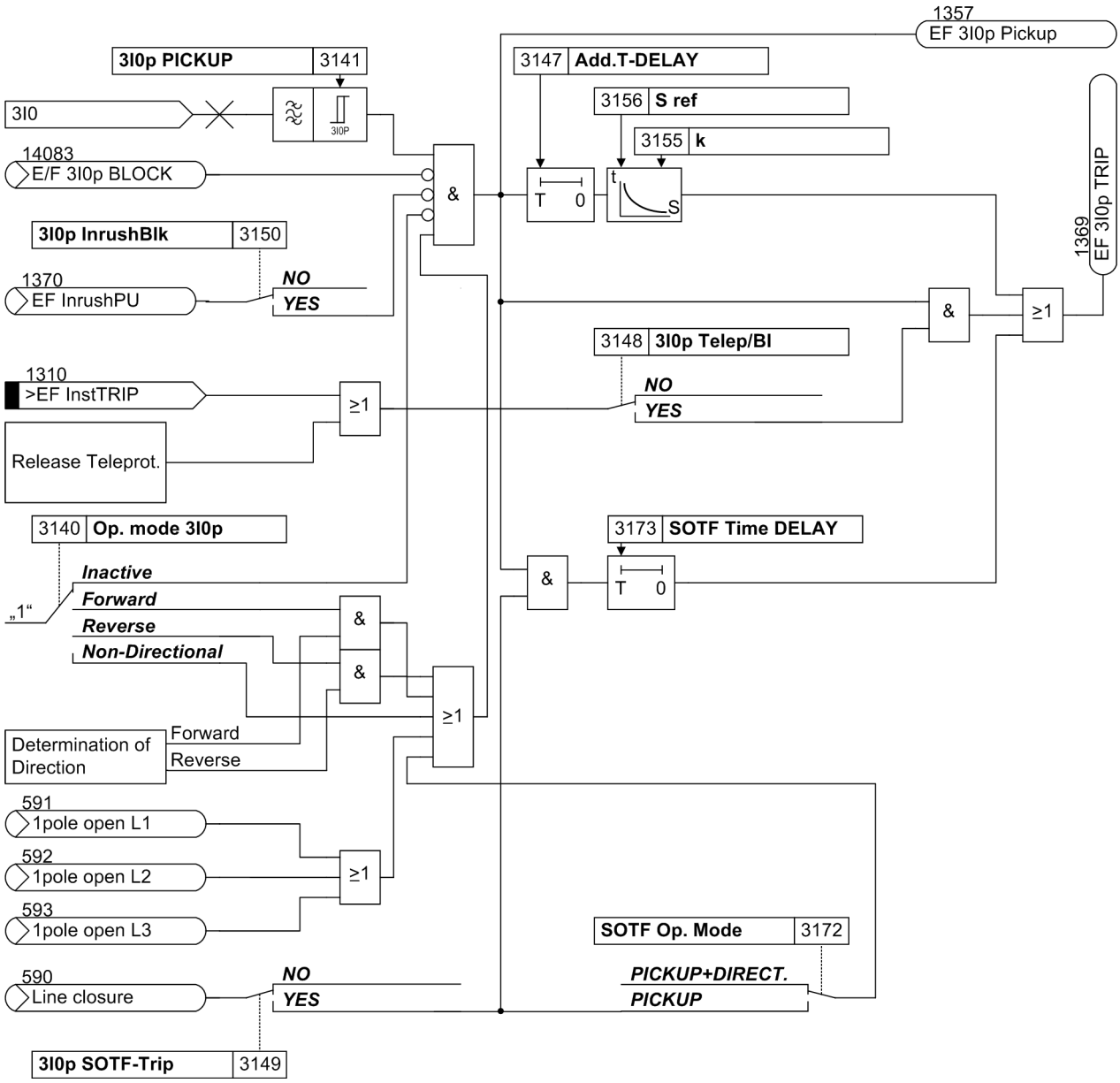

Figure 2-75 Zero-sequence power protection

Figure 2-75 shows the logic diagram. The tripping time depends on the level of the compensated zero-sequence power S_r as defined above. For meshed earthed systems the zero-sequence voltage and the zero-sequence current increase towards the earth fault location. The inverse characteristic results in the shortest command time for the relay closest to the fault. The other relays then reset.

Phase current stabilization

Asymmetrical load conditions in multiple-earthed systems or different current transformer errors can result in a zero-sequence current. This zero-sequence current could cause faulty pickup of the earth current stages if low pickup thresholds are set. To avoid this, the earth current stages are stabilized by the phase current: as the phase currents increase, the pickup thresholds are increased (Figure 2-76). The stabilization factor (= slope) can be changed with parameter **`Iph-STAB. Slope`** (address 3104). It applies to all stages.

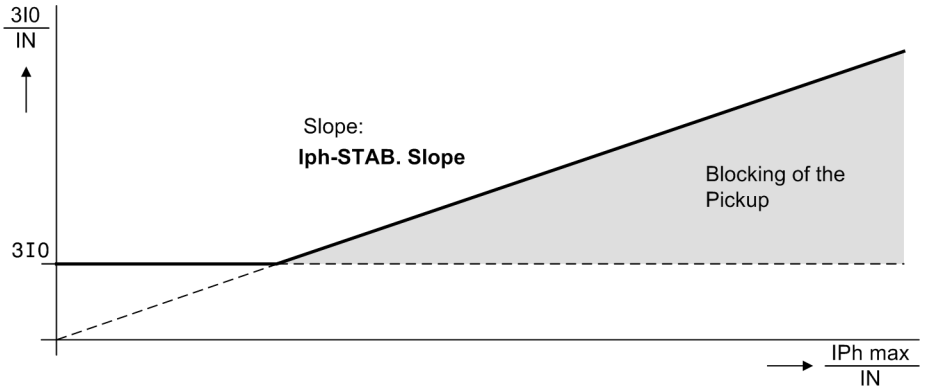

Figure 2-76 Phase current stabilization

Inrush restraint

If the device is connected to a transformer feeder, large inrush currents can be expected when the transformer is energized; if the transformer starpoint is earthed, also in the zero-sequence path. The inrush current may be a multiple of the rated current and flow for several tens of milliseconds up to several minutes.

Although the fundamental current is evaluated by filtering of the measured current, an incorrect pickup during energization of the transformer may result if very short delay times are set. In the rush current there is a substantial portion of fundamental current depending on the type and size of the transformer that is being energized.

The inrush stabilization blocks tripping of all those stages for which it has been activated, for as long as the rush current is recognized.

The inrush current is characterized by a relatively large amount of second harmonic (twice the rated frequency) which is virtually non-existent in the short-circuit current. Numerical filters that carry out a Fourier analysis of the current are used for the frequency analysis. As soon as the harmonic content is greater than the set value (**`2nd InrushRest`**), the affected stage is blocked.

Inrush blocking is not effective below a certain current threshold. For devices with normal earth current transformer and for devices without separate earth current transformer, inrush blocking is only effective if the earth current is higher than 0.41 I_N or if the current of the 2nd harmonic is higher than 0,041 I_N.

For devices with sensitive current transformer, inrush blocking becomes effective as soon as the earth current is higher than 22 mA or the current of the 2nd earth current harmonic is higher than 2,2 mA.

Determination of direction with zero-sequence system (zero-sequence voltage and/or transformer star point current

The direction determination is carried out with the measured current $\underline{I}_E$ (= $-3\cdot\underline{I}_0$), which is compared to a reference voltage $\underline{U}_P$.

The voltage required for direction determination $\underline{U}_P$ may be derived from the starpoint current $\underline{I}_Y$ of an earthed transformer (source transformer), provided that the transformer is available.

Moreover, both the zero-sequence voltage $3\cdot\underline{U}_0$ and the starpoint current $\underline{I}_Y$ of a transformer can be used for measurement. The reference magnitude $\underline{U}_P$ then is the sum of the zero-sequence voltage $3\cdot\underline{U}_0$ and a value which is proportional to reference current $\underline{I}_Y$. This value is about 20 V for rated current (Figure 2-77).

The directional determination using the transformer starpoint current is independent of voltage transformers and therefore also functions reliably during a fault in the voltage transformer secondary circuit. It requires, however, that at least a substantial amount of the earth fault currents are fed via the transformer whose starpoint current is measured.

For the determination of direction, a minimum current $3\underline{I}_0$ and a minimum displacement voltage which can be set as **3U0>** are required. If the displacement voltage is too small, the direction can only be determined if it is polarised with the transformer starpoint current and this exceeds a minimum value corresponding to the setting **IY>**. Direction determination with $3\underline{U}_0$ is blocked if the device detects a fault condition in the voltage transformer secondary circuit (binary input reports trip of the voltage transformer mcb, „Fuse Failure Monitor“, measured voltage failure monitoring) or a single-pole dead time.

In order to allow directional determination also during a fault in the secondary circuit of the "normal" voltage transformers, the broken delta winding U_{en} can additionally be connected, in combination with a separate VT miniature circuit breaker (address 210 **U4 transformer** = ***Udelta transf.***). When this VT miniature circuit breaker trips for the U_{en} transformer (no. 362 „>FAIL:U4 VT“), the system switches automatically to the zero-sequence voltage calculated from the "normal" voltage transformers.

Directional determination with $3\cdot\underline{U}_0$ is possible as long as the calculated zero-sequence voltage is not disturbed as well. The calculated zero-sequence voltage is deemed to be disturbed if the VT miniature circuit breaker has tripped (binary input no. 361 „>FAIL:Feeder VT“), or if the "fuse failure monitor" or the measuring voltage monitoring have picked up.

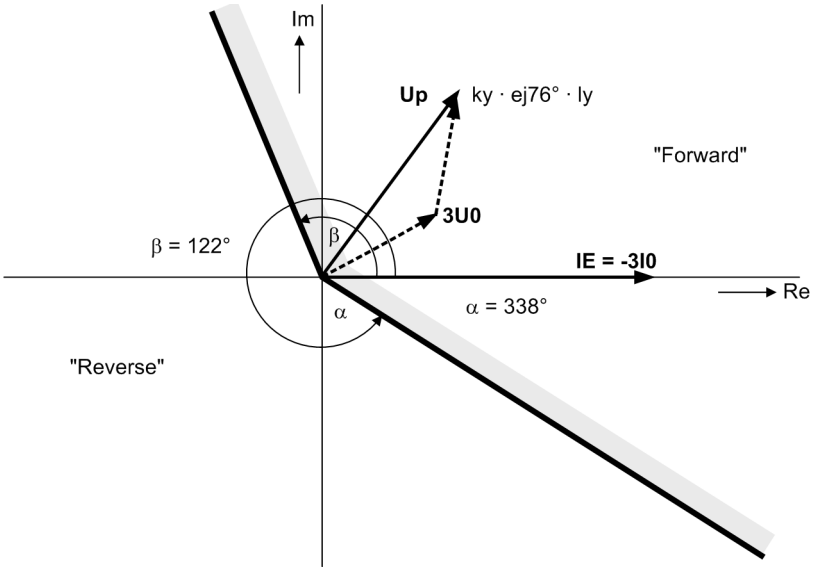

Figure 2-77 Directional characteristic of the earth fault protection

Determination of direction for long lines

In case of forward faults on very long lines, the zero-sequence voltage required for determination of direction may become very small. The reason for this is the high ratio between the zero-sequence impedance of the line and the infeed (source).

In the case of reverse faults, however, the zero-sequence voltage cannot drop that low if at the same time the zero-sequence current exceeds the set pickup level; refer also to Figure 2-84.

For this reason, the system may automatically indicate a "forwards" direction when the zero-sequence voltage drops below the threshold value 3186 **3U0< forward**.

Determination of direction for lines with series compensation

The direction determination/directional characteristic of the earth fault protection is based on the assumption of a mainly inductive zero-sequence system impedance. In case of a series-compensated line, however, this assumption does not apply anymore. According to the degree of compensation, the zero-sequence system impedance is more or less influenced regarding its capacity. The situation is especially unfavorable if the capacitor is located on the busbar side of the voltage transformers.

In case of faults on the protected line, the zero-sequence voltage consists of two components: the voltage drop on the source impedance (mainly inductive) and the voltage drop over the series capacitor.

If the capacity of the series capacitor is known (and constant), the voltage drop on the series capacitor can be determined according to the following formula:

$\underline{U}_{CO} = -jX_{CO}\ \underline{3 \cdot I}_0$

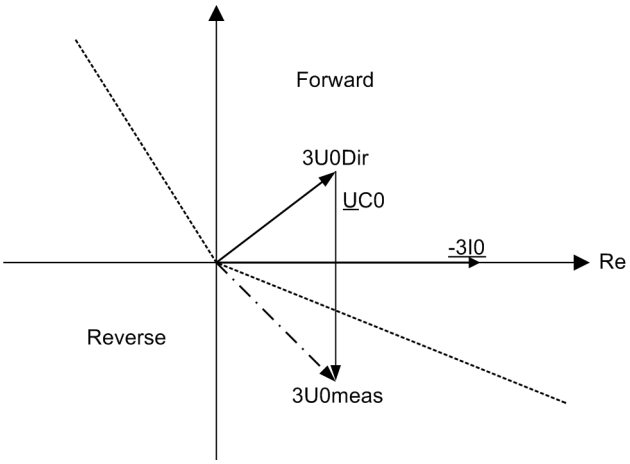

Figure 2-78 Correction of series compensation for the direction determination with zero-sequence system

The voltage drop on the series capacitor $\underline{U}_{C0} = 3 \cdot \underline{I}_0 \cdot$ **XserCap** (address 3187) is subtracted from the measured zero-sequence voltage $\underline{3U}_{0meas}$. The resulting voltage $\underline{3U}_{0Dir}$ is then assigned to the directional characteristic of the earth fault protection, as shown on Figure 2-78.

Determination of direction with negative phase-sequence system

It is advantageous to use negative sequence system values for the direction measurement if the zero-sequence voltages that appear during earth faults are too small for an analysis of the zero-sequence values.

Otherwise, this function operates the same way as the direction determination with zero-sequence current and zero-sequence voltage. Instead of 3 $\underline{I}_0$ and 3 $\underline{U}_0$, the negative sequence signals 3 $\underline{I}_2$ and 3 $\underline{U}_2$ are simply used for the measurement. These signals must also have a minimum magnitude of **3I2>** or **3U2>**.

It is also possible to determine the direction with a zero-sequence system or a negative sequence system. In this case the device determines whether the zero-sequence voltage or the negative sequence voltage is larger. The direction is determined by the larger of the two values. The direction is not determined during the single-pole dead time.

For the application of a teleprotection scheme, the direction determination must be performed at all terminals with the same setting.

Determination of direction with compensated zero-sequence power

The zero-sequence power may also be used for direction determination. In this case the sign of the compensated zero-sequence power is decisive. This is the zero-sequence power component S_r as mentioned above under „Zero-Sequence Power“ in direction of a configurable compensation angle φ_{comp}, i.e.

$S_r = 3I_0 \cdot 3U_0 \cdot \cos(\varphi - \varphi_{Comp})$.

The direction determination yields

- forward if S_r is positive and S_r > ***S FORWARD***,
- reverse if $|S_r|$ > ***S FORWARD***,

The determination of direction requires a minimum current $3I_0$ and a minimum displacement voltage which can be set as **3U0>**. The prerequisite is still that the compensated zero-sequence power has a configurable minimum magnitude. Direction determination is also blocked if the device detects a fault condition in the voltage transformer secondary circuit (binary input reports trip of the voltage transformer mcb, „Fuse Failure Monitor“, measured voltage failure monitoring) or a single-pole dead time. Figure 2-79 shows an example of the directional characteristic.

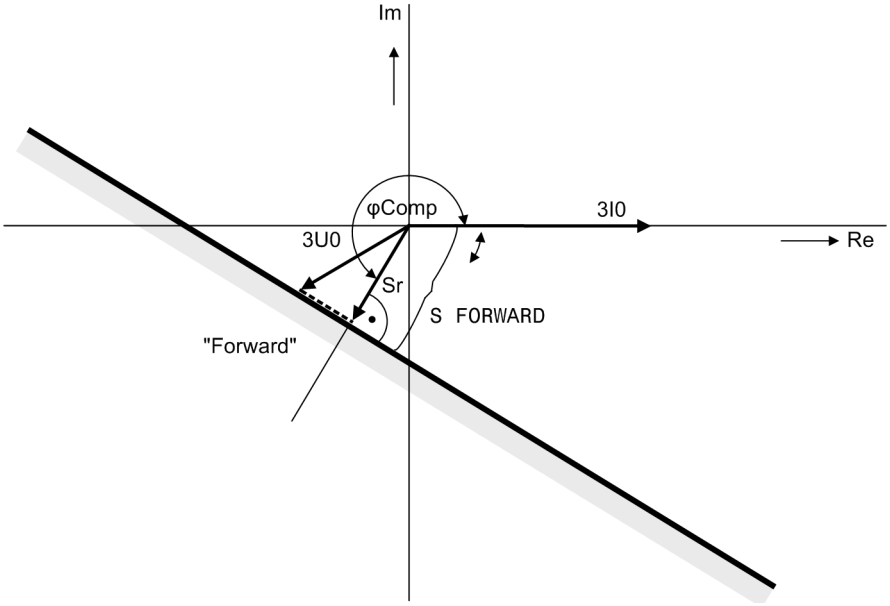

Figure 2-79 Directional characteristic with zero sequence power, example S_r = setting value **S FORWARD**

Selection of the earth faulted phase

Since the earth fault protection uses the quantities of the zero-sequence system and the negative sequence system, the faulted phase cannot be determined directly. To enable single-pole automatic reclosure in case of high-resistance earth faults, the earth fault protective function features a phase selector. The phase-selector detects by means of the distribution of the currents and voltages whether a fault is single-phase or multi-phase. If the fault is single-phase, the faulted phase is selected. The phase selector is blocked during a single-pole automatic reclosure.

Once a multi-phase fault has been detected, a three-pole trip command is generated. Three-pole tripping is also initiated if single-pole tripping would be possible but is not permitted. Single-pole tripping is prevented by the setting or three-pole coupling of other internal protection functions or of an external reclosing device via binary input.

The phase selector uses the phase angle between negative sequence current and zero-sequence current to determine the fault type. The phase currents are evaluated - if necessary with load current compensation - to distinguish between different fault types. This method relies on the fact that in the event of a single phase fault the fault-free phases can conduct either no fault currents at all or only such fault currents that are almost completely in phase.

If this criterion does not allow to determine the fault type, e.g. because the zero-sequence current or negative sequence current is too low, an additional check is carried out for considerable voltage drops or overcurrents that would indicate a single-phase fault.

The phase selector has an action time of approximately 40 ms. If the phase selector has not made a decision during this time, three-pole tripping is initiated. Three-pole tripping is initiated anyway as soon as a multi-pole fault has been detected, as described above. Therefore the phase-selective transmit signals in teleprotection schemes can have a delay of up to 40 ms as compared to the non phase-selective transmit signal 1384 „EF Tele SEND“ (see Section 2.8).

Figure 2-80 shows the logic diagram. The phase determined by the phase selector can be processed selectively for each phase, for example the internal information „E/F PickupL1“ etc. is used for phase-selective signal transmission.

External indication of the phase-selective pickup is performed via the information „E/F L1 selec.“ etc. This information appears only if the phase was clearly detected. Single-pole tripping requires of course the general prerequisites to be fulfilled (device must be suited for single-pole tripping, single-pole tripping allowed).

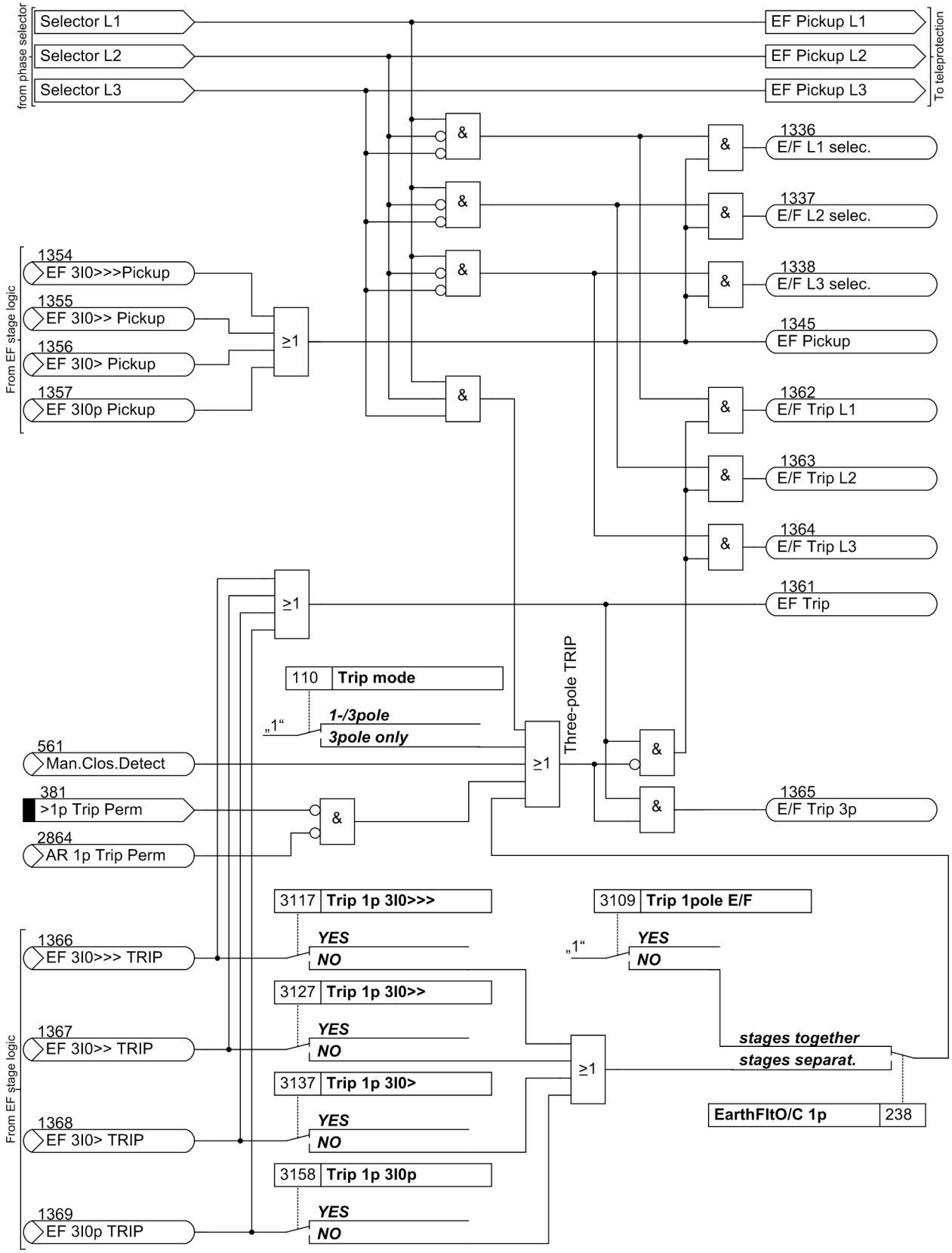

Figure 2-80 Logic diagram of single-pole tripping with phase selector

Blocking

The earth fault protection can be blocked by the distance protection. If in this case a fault is detected by the distance protection, the earth fault protection will not trip. This gives the selective fault clearance by the distance protection preference over tripping by the earth fault protection. The blocking can be restricted by configuration to single-phase or multi-phase faults and to faults in distance zone Z1 or Z1/Z1B. The blocking only affects the time sequence and tripping by the earth fault protection function and after the cause of the blocking has been cleared, it is maintained for approximately 40ms to prevent signal race conditions. It is issued as fault indication „EF TRIP BLOCK“ (No. 1335).

The earth fault protection can also be blocked during the single-pole dead time of an automatic reclose cycle. This prevents an incorrect measurement resulting from the zero-sequence current and voltage signals arising in this state. The blocking affects optionally the entire protection function or the individual stages and is maintained for approximately 40ms after reclosure to prevent signal race conditions. If the complete function is blocked, the indication „E/F BLOCK“ (No. 1332) is output. The blocking of individual stages is signaled by the indications 14080 to 14083.

If the device is combined with an external automatic reclose device or if single-pole tripping can result from a separate (parallel tripping) protection device, the earth fault protection must be blocked via binary input during the single-pole open condition.

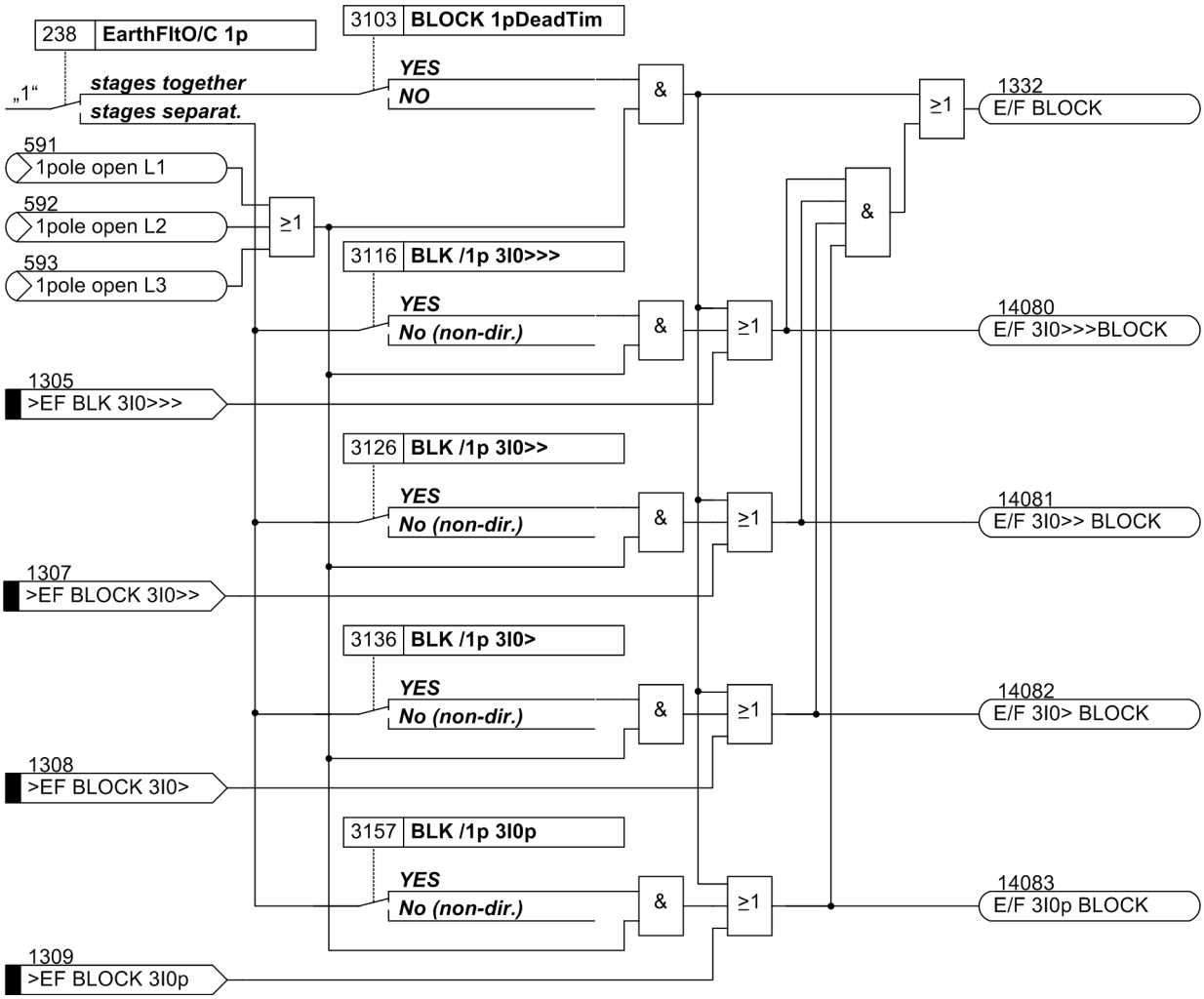

Figure 2-81 Logic diagram of single-pole tripping with phase selector

Switching onto an earth fault

The line energisation detection can be used to achieve fast tripping when energising the circuit breaker in case of an earth fault. The earth fault protection can then trip three-pole without delay. Parameters can be set to determine to which stage(s) the non-delayed tripping following energisation applies (see also logic diagrams from Figure 2-71 to Figure 2-75).

The non-delayed tripping in case of line energization detection is blocked as long as the inrush-stabilization recognizes a rush current. This prevents instantaneous tripping by a stage which, under normal conditions, is sufficiently delayed during energization of a transformer.

2.7.2 Setting Notes

General

During the configuration of the device scope of functions (refer to Section 2.1.1, address 131 **Earth Fault O/C**) it was determined which group of characteristics is to be available. Only those parameters that apply to the available characteristics, according to the selected configuration and the version of the device, are accessible in the procedures described below.

Parameter 3101 **FCT EarthFltO/C** can be used to switch the earth fault protection ***ON*** or ***OFF***. This refers to all stages of the earth fault protection.

If not required, each of the four stages can be deactivated by setting its **MODE...** to ***Inactive*** (see below).

Blocking

The earth fault protection can be blocked by the distance protection to give preference to the selective fault clearance by the distance protection over tripping by the earth fault protection. In address 3102 **BLOCK for Dist.** it is determined whether blocking is performed during each fault detection of the distance protection (***every PICKUP***) or only during single-phase fault detection by the distance protection (***1phase PICKUP***) or only during multiple-phase fault detection by the distance protection (***multiph. PICKUP***). If blocking is not desired, set ***NO***.

It is also possible to block the earth fault protection trip only for pickup of the distance protection on the protected line section. To block the earth fault protection for faults occurring within zone Z1, set address 3174 **BLK for DisZone** to ***in zone Z1***. To block the earth fault protection for faults occurring within zone Z1 or Z1B, set address 3174 **BLK for DisZone** to ***in zone Z1/Z1B***. If, however, blocking of the earth fault protection by the distance protection is to take effect regardless of the fault location, set address 3174 **BLK for DisZone** to ***in each zone***.

Address 3102 thus refers to the fault type and address 3174 to the fault location. The two blocking options create an AND condition. To block the earth fault protection only for single-phase faults occurring in zone Z1, set address 3102 **BLOCK for Dist.** = ***1phase PICKUP*** and 3174 **BLK for DisZone** = ***in zone Z1***. To block the earth fault protection for any fault type (any distance protection pickup) occurring within zone Z1, the setting 3102 **BLOCK for Dist.** = ***every PICKUP*** and 3174 **BLK for DisZone** = ***in zone Z1*** applies.

The earth fault protection must be blocked during single-pole automatic reclose dead time to avoid pickup with the zero-sequence values and, if applicable, the negative sequence values arising during this state.

When setting the power system data (Section 2.1.2.1), it was specified whether all stages of the earth fault protection are blocked together or separately during the single-pole dead time.

When setting 238 **EarthFltO/C 1p** to ***stages together***, parameter 3103 **BLOCK 1pDeadTim** becomes visible; the parameters for phase-selective blocking are hidden.

Parameter 3103 **BLOCK 1pDeadTim** must be set to ***YES*** (presetting for devices with single-pole tripping) if a single-pole automatic reclosure is to be performed. If not, set ***NO***.

Setting parameter 3103 **BLOCK 1pDeadTim** to ***YES*** completely blocks the earth fault protection if the Open Pole Detector has recognized a single-pole dead time. If no single-pole tripping is carried out in the protected network, this parameter should be set to ***NO***.

Regardless of how parameter address 3103 **BLOCK 1pDeadTim** is set, the earth fault protection will always be blocked during the single-pole dead time, if it has issued a trip command itself. This is necessary because otherwise the picked up earth fault protection cannot drop out if the fault current was caused by load current.

When setting ***stages separat.***, the parameters for phase-selective blocking become visible (3116 **BLK /1p 3IO>>>**, 3126 **BLK /1p 3IO>>**, 3136 **BLK /1p 3IO>** and 3157 **BLK /1p 3IOp**), parameter 3103 **BLOCK 1pDeadTim** is hidden.

The parameters 3116, 3126, 3136 and 3157 are used to define which stage is to be blocked during the single-pole dead time. If the corresponding stage is to be blocked, the setting ***YES*** remains unchanged. If not, set ***No (non-dir.)***.

Note

Stages of the earth fault protection, which are not to be blocked during the single-pole dead time, will not be blocked even if the earth fault protection itself gives a single-pole trip command. Pickup and trip command of the earth fault protection can thus only drop out if the earth current caused by the load current lies below the threshold value of such a stage.

Trip

When setting the power system data (Section 2.1.2.1), it was specified whether single-pole tripping is set for all stages of the earth fault protection together or separately.

When setting 238 **EarthFlt0/C 1p** to ***stages together***, parameter 3109 **Trip 1pole E/F** becomes visible; the parameters for phase-selective settings are hidden.

Address 3109 **Trip 1pole E/F** specifies that the earth fault protection trips single-pole, provided that the faulted phase can be determined with certainty. This address is only valid for devices that have the option to trip single-pole. If you are using single-pole automatic reclosure, the setting ***YES*** (default setting) remains valid. Otherwise set ***NO***.

When setting ***stages separat.***, the parameters for the phase-selective setting are visible (3117 **Trip 1p 3IO>>>**, 3127 **Trip 1p 3IO>>**, 3137 **Trip 1p 3IO>** and 3158 **Trip 1p 3IOp**) parameter 3109 **Trip 1pole E/F** is hidden.

The parameters 3117, 3127, 3137 and 3158 can be used to determine which stage is to trip 1-pole, provided that the faulted phase can be determined with certainty. If the corresponding stage is to trip 1-pole, the setting ***YES*** remains unchanged; if not, set ***NO***.

Definite time stages

First of all, the mode for each stage is set: address 3110 **Op. mode 3IO>>>**, address 3120 **Op. mode 3IO>>** and address 3130 **Op. mode 3IO>**. Each stage can be set to operate ***Forward*** (usually towards line), ***Reverse*** (usually towards busbar) or ***Non-Directional*** (in both directions). If a single stage is not required, set its mode to ***Inactive***.

The definite time stages **3IO>>>** (address 3111), **3IO>>** (address 3121) and **3IO>** (address 3131) can be used for a three-stage definite time overcurrent protection. They can also be combined with the inverse time stage **3IOp PICKUP** (address 3141, see below). The pick up thresholds should in general be selected such that the most sensitive stage picks up with the smallest expected earth fault current.

The $3I_0$>> and $3I_0$>>> stages are best suited for fast tripping stages (instantaneous), as these stages use an abridged filter with shorter response time. Whereas, the stages $3I_0$> and $3I_{0P}$ are best suited for very sensitive earth fault detection due to their effective method of suppressing harmonics.

If no inverse time stage, but rather a fourth definite time stage is required, the „inverse time“ stage can be implemented as a definite time stage. This must already be taken regard of during the configuration of the protection functions (refer to Section 2.1.1.2, address 131 **Earth Fault O/C** = ***Definite Time***). For this stage, the address 3141 **3IOp PICKUP** then determines the current pickup threshold and address 3147 **Add.T-DELAY** the definite time delay.

The values for the time delay settings **T 3IO>>>** (address 3112), **T 3IO>>** (address 3122) and **T 3IO>** (address 3132) are derived from the earth fault grading coordination diagram of the system.

During the selection of the current and time settings, regard must be taken as to whether a stage should be direction dependent and whether it uses teleprotection. Refer also to the margin headings „Determination of Direction“ and „Teleprotection with Earth Fault Protection“.

The set time delays are pure additional delays, which do not include the operating time (measuring time).

Inverse time stage with IEC characteristic

If the fourth stage has been configured as an inverse time overcurrent stage with IEC characteristic (address 131 **Earth Fault O/C** = ***TOC IEC***), you first set the mode: Address 3140 **Op. mode 3IOp**. This stage can be set to operate ***Forward*** (usually towards line) or ***Reverse*** (usually towards busbar) or ***Non-Directional*** (in both directions). If the stage is not required, set its mode to ***Inactive***.

For the inverse time overcurrent stage $3I_{0P}$ it is possible to select from a variety of characteristics depending on the version of the relay and the configuration (Section 2.1.1.2, address 131). If an inverse time overcurrent stage is not required, set address 131 **Earth Fault O/C** = ***Definite Time***. The $3I_{0P}$ stage can then be used as a fourth definite time stage (refer to „Definite Time Stages“ above) or deactivated. With IEC characteristics (address 131 **Earth Fault O/C** = ***TOC IEC***) the following options are available in address 3151 **IEC Curve**:

Normal Inverse (inverse, type A according to IEC 60255-3),

Very Inverse (very inverse, type B according to IEC 60255-3),

Extremely Inv. (extremely inverse, type C according to IEC 60255-3), and

LongTimeInverse (long inverse, type B according to IEC 60255-3).

The characteristics and equations they are based on are listed in the Technical Data.

The setting of the pickup threshold **3IOp PICKUP** (address 3141) is similar to the setting of definite time stages (see above). In this case it must be noted that a safety margin between the pickup threshold and the set value has already been incorporated. Pickup only occurs at a current which is approximately 10 % above the set value.

The time multiplier setting **3IOp Time Dial** (address 3143) is derived from the grading coordination chart which was set up for earth faults in the system.

In addition to the inverse time delay, a constant (fixed length) time delay can also be set if this is required. The setting **Add.T-DELAY** (address 3147) is added to the time of the set characteristic.

During the selection of the current and time settings, regard must be taken as to whether a stage should be direction dependent and whether it uses teleprotection. Refer also to the margin headings „Determination of Direction“ and „Teleprotection with Earth Fault Protection“.

Inverse Time Current Stage with ANSI Characteristic

If the fourth stage has been configured as an inverse time overcurrent stage with ANSI characteristic (address 131 **Earth Fault O/C** = ***TOC ANSI***), you first set the mode: Address 3140 **Op. mode 3IOp**. This stage can be set to operate ***Forward*** (usually towards line) or ***Reverse*** (usually towards busbar) or ***Non-Directional*** (in both directions). If the stage is not required, set its mode to ***Inactive***.

For the inverse time overcurrent stage $3I_{0P}$ it is possible to select from a variety of characteristics depending on the version of the relay and the configuration (Section 2.1.1, address 131). If an inverse time overcurrent stage is not required, set address 131 **Earth Fault O/C** = ***Definite Time***. The $3I_{0P}$ stage can then be used as a fourth definite time stage (refer to „Definite Time Stages“ above). With ANSI characteristics (address 131 **Earth Fault O/C** = ***TOC ANSI***) the following options are available in address 3152 **ANSI Curve**:

Inverse,

Short Inverse,

Long Inverse,

Moderately Inv.,

Very Inverse,

Extremely Inv.,

Definite Inv..

The characteristics and equations they are based on are listed in the Technical Data.

The setting of the pickup threshold **3IOp PICKUP** (address 3141) is similar to the setting of definite time stages (see above). In this case it must be noted that a safety margin between the pickup threshold and the set value has already been incorporated. Pickup only occurs at a current which is approximately 10 % above the set value.

The time multiplier setting **3IOp Time Dial** (address 3144) is derived from the grading coordination chart which was set up for earth faults in the system.

In addition to the inverse time delay, a constant (fixed length) time delay can also be set if this is required. The setting **Add.T-DELAY** (address 3147) is added to the time of the set curve.

During the selection of the current and time settings, regard must be taken as to whether a stage should be direction dependent and whether it uses teleprotection. Refer also to the margin headings „Determination of Direction“ and „Teleprotection with Earth Fault Protection“.

Inverse time stage with logarithmic inverse characteristic

If you have configured the inverse time overcurrent stage with logarithmic inverse characteristic (address 131 **Earth Fault O/C** = ***TOC Logarithm.***), you set the operating mode first: Address 3140 **Op. mode 3IOp**. This stage can be set to operate ***Forward*** (usually towards line) or ***Reverse*** (usually towards busbar) or ***Non-Directional*** (in both directions). If the stage is not required, set its mode to ***Inactive***.

For the logarithmic inverse characteristic (address 131 **Earth Fault O/C** = ***TOC Logarithm.***) address 3153 **LOG Curve** = ***Log. inverse***.

The characteristic and the formula on which it is based can be found in the Technical Data.

Figure 2-82 illustrates the influence of the most important setting parameters on the curve. **3IOp PICKUP** (address 3141) is the reference value for all current values, while **3IOp Startpoint** (address 3154) determines the beginning of the curve, i.e. the lowest operating range on the current axis (referred to **3IOp PICKUP**). The timer setting **3IOp MaxT-DELAY** (address 3146) determines the starting point of the curve (for $3I_0$ = **3IOp PICKUP**). The time factor **3IOp Time Dial** (address 3145) changes the slope of the curve. For large currents, **3IOp MinT-DELAY** (address 3142) determines the lower limit on the time axis. For currents larger than 35 · **3IOp PICKUP** the operating time no longer decreases.

Finally, at address 3147 **Add.T-DELAY** a fixed time delay can be set as was done for the other curves.

During the selection of the current and time settings, regard must be taken as to whether a stage should be direction dependent and whether it uses teleprotection. Refer also to the margin headings „Determination of Direction“ and „Teleprotection with Earth Fault Protection“.

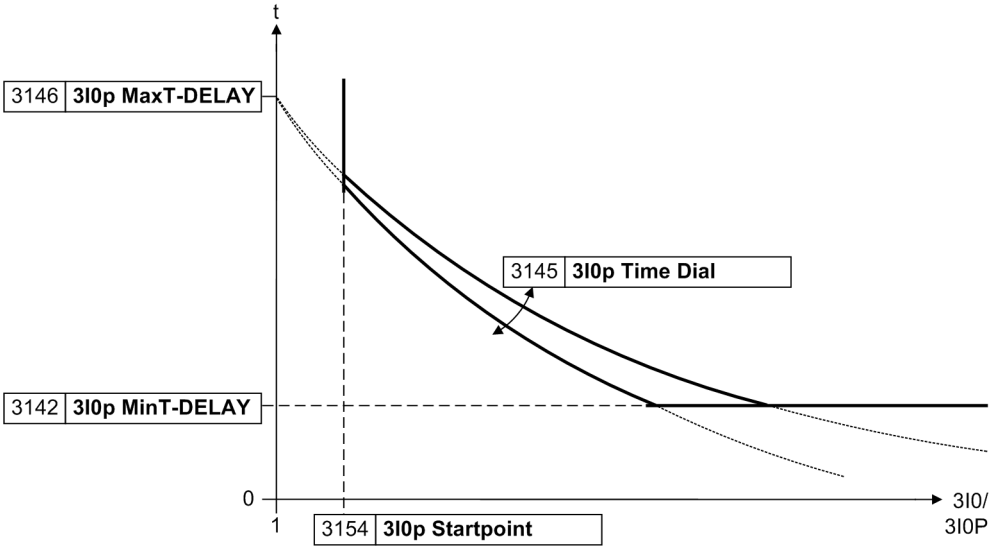

Figure 2-82 Curve parameters in the logarithmic–inverse characteristic

Zero-Sequence Voltage-controlled Stage with Inverse Characteristic

If you have configured the zero-sequence voltage controlled stage (address 131 **Earth Fault O/C** = ***UO inverse***), you set the operating mode first: Address 3140 **Op. mode 3IOp**. This stage can be set to operate ***Forward*** (usually towards line) or ***Reverse*** (usually towards busbar) or ***Non-Directional*** (in both directions). If the stage is not required, set its mode to ***Inactive***.

Address 3141 **3IOp PICKUP** indicates the minimum current value above which this stage is required to operate. The value must be exceeded by the minimum earth fault current value.

The voltage-controlled characteristic is based on the following formula:

$$t = \frac{2\ s}{0{,}25\ U_0 / V - U_{0\ min} / V}$$

U_0 is the actual zero-sequence voltage. $U_{0\ min}$ is the setting value **UOinv. minimum** (address 3183). Please take into consideration that the formula is based on the zero-sequence voltage U_0, not on $3U_0$. The function is illustrated in the Technical Data.

Figure 2-83 shows the most important parameters. **UOinv. minimum** displaces the voltage-controlled characteristic in direction of $3U_0$. The set value is the asymptote for this characteristic ($t \rightarrow \infty$). In Figure 2-83, **a'** shows an asymptote that belongs to the characteristic **a**.

The minimum voltage **3UO>(UO inv)** (address 3182) is the lower voltage threshold. It corresponds to the line **c** in Figure 2-83. In characteristic **b** (asymptote not drawn) the curve is cut by the minimum voltage **3UO>(UO inv)** (line **c**).

In address 3184, an additional time **T forw. (UOinv)** that is added to the voltage-controlled characteristic can be set for directional-controlled tripping.

With the non-directional time **T rev. (UOinv)** (address 3185) a non-directional back-up stage can be generated.

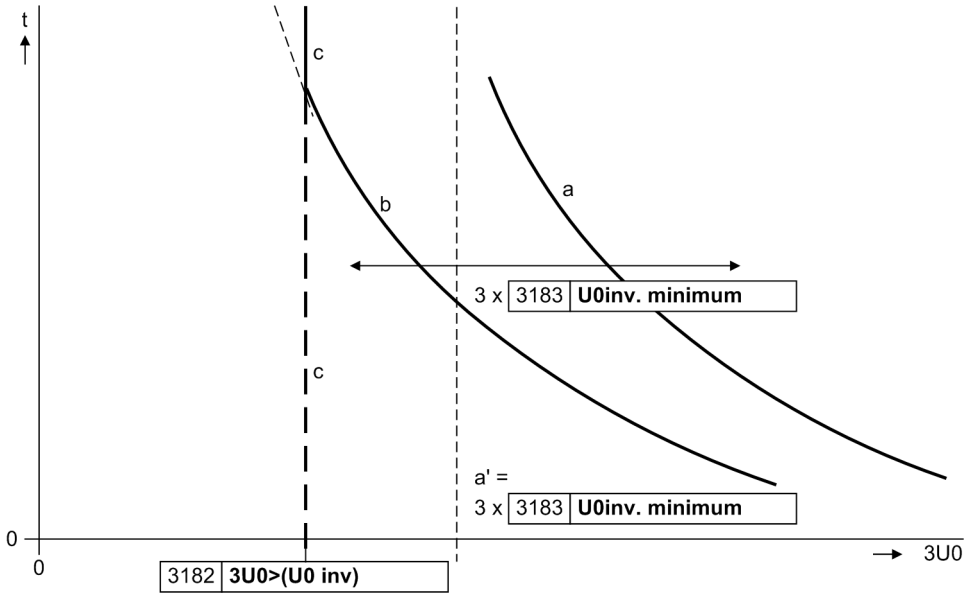

Figure 2-83 Characteristic settings of the zero-sequence voltage time-dependent stage — without additional times

Zero-sequence power stage

If you have configured the fourth stage as zero-sequence power stage (address 131 **Earth Fault O/C** = ***Sr inverse***), set the mode first: Address 3140 **Op. mode 3IOp**. This stage can be set to operate ***Forward*** (usually towards line) or ***Reverse*** (usually towards busbar) or ***Non-Directional*** (in both directions). If the stage is not required, set its mode to ***Inactive***. The zero-sequence power protection is to operate always in line direction.

Address 3141 **3IOp PICKUP** indicates the minimum current value above which this stage is required to operate. The value must be exceeded by the minimum earth fault current value.

The zero-sequence power S_r is calculated according to the formula:

$$S_r = 3I_0 \cdot 3U_0 \cdot \cos(\varphi - \varphi_{Comp})$$

The angle φ_{Comp} is set as maximum-sensitivity angle at address 3168 **PHI comp**. It refers to the zero-sequence voltage in relation to the zero-sequence current. The default setting 255° thus corresponds to a zero-sequence impedance angle of 75° (255° – 180°). Refer also to margin heading „Zero-Sequence Power Protection“.

The trip time depends on the zero sequence power according to the following formula:

$$t = k \cdot \frac{S_{ref}}{S_r}$$

Where S_r is the compensated power according to above formula. S_{ref} is the setting value **S ref** (address 3156), that indicates the pickup value of the stage at $\varphi = \varphi_{comp}$. Factor **k** (address 3155) can be set to displace the zero-sequence time characteristic in time direction, the reference value **S ref** can be set for displacement in power direction.

The time setting **Add.T-DELAY** (address 3147) allows an additional power-independent delay time to be set.

Direction determination

The direction of each required stage was already determined when setting the different stages.

According to the requirements of the application, the directionality of each stage is individually selected. If, for instance, a directional earth fault protection with a non-directional back-up stage is required, this can be implemented by setting the $3I_0$>> stage directional with a short or no delay time and the $3I_0$> stage with the same pickup threshold, but a longer delay time as directional backup stage. The $3I_0$>>> stage could be applied as an additional high set instantaneous stage.

If a stage is to operate with teleprotection according to Section 2.8, it may operate without delay in conjunction with a permissive scheme. In the blocking scheme, a short delay equal to the signal transmission time, plus a small reserve margin of approx. 20 ms is sufficient.

Direction determination of the overcurrent stages usually uses the earth current as measured quantity $\underline{I}_E = -3\underline{I}_0$, whose angle is compared with a reference quantity. The desired reference quantity is set in **POLARIZATION** (address 3160):

The default setting ***U0 + IY or U2*** is universal. The device then selects automatically whether the reference quantity is composed of the zero-sequence voltage plus the transformer starpoint current, or whether the negative-sequence voltage is used, depending on which quantity prevails. You can even apply this setting when no transformer starpoint current I_Y is connected to the device since an unconnected current does not have any effect.

The setting ***U0 + IY*** can also be applied with or without transformer starpoint current connected.

If the direction determination must be carried out using only $\underline{I}_Y$ as reference signal, apply the setting ***with IY only***. This makes sense if a reliable transformer starpoint current $\underline{I}_Y$ is always available at the device input I_4. The direction determination is then not influenced by disturbances in the secondary circuit of the voltage transformers. This presupposes that the device is equipped with a current input I_4 of normal sensitivity and that the current from the transformer starpoint infeed is connected to I_4.

If direction determination is to be carried out using exclusively the negative sequence system signals $3\underline{I}_2$ and $3\underline{U}_2$, the setting ***with U2 and I2*** is applied. In this case, only the negative-sequence signals calculated by the device are used for direction determination. In that case, the device does not require any zero-sequence signals for direction determination.

If you are using the zero-sequence power protection (address 131 **Earth Fault O/C** = ***Sr inverse***), it is reasonable to conduct the direction determination also via the zero-sequence power. In this case, apply the option ***zero seq. power*** for **POLARIZATION**.

Finally, the threshold values of the reference quantities must be set. **3U0>** (address 3164) determines the minimum operating voltage for direction determination with U_0. If U_0 is not used for the direction determination, this setting is of no consequence. The set threshold should not be exceeded by asymmetries in the operational measured voltage. The setting value relates to the triple zero-sequence voltage, that is

$$3 \cdot U_0 = |\underline{U}_{L1} + \underline{U}_{L2} + \underline{U}_{L3}|$$

If the voltage-controlled characteristic (U0 inverse) is used as directional stage, it is reasonable for the minimum polarizing voltage to use a value that is equal to or below the minimum voltage of the voltage-controlled characteristic (address 3182).

Only if you have set in the **P.System Data 1** (see Section 2.1.2.1) the connection of the fourth current transformer **I4 transformer** (address 220) = ***IY starpoint***, address 3165 **IY>** will appear. It is the lower threshold for the current measured in the starpoint of a source transformer. A relatively sensitive setting can be applied for this value, as the measurement of the starpoint current is quite accurate by nature.

If the direction determination must be carried out with the negative sequence system signals, the setting values **3U2>** (address 3166) and **3I2>** (address 3167) are decisive for the lower limit of the direction determination. The setting values must in this case also be selected such that operational asymmetry in the system does not lead to a pickup.

If you are using the zero-sequence power protection and the fault direction is determined on the basis of the zero-sequence power, address 3169 **S forward** indicates the value of the compensated zero-sequence power above which the direction is recognized as forward. This value should be smaller than the reference power **S ref** (address 3156, see paragraph „Zero-Sequence Power Stage“). This ensures the availability of direction determination even with smaller zero-sequence power conditions.

The position of the directional characteristic can be changed in dependence on the selected method of direction determination (address 3160 **POLARIZATION**, see above). All methods based on angle measurement between measured signal and reference signal (i.e. all methods except **POLARIZATION** = ***zero seq. power***), allow the angle range of the direction determination to be changed with the setting angles **Dir. ALPHA** and **Dir. BETA** (addresses 3162 and 3163). This parameter can only be changed in DIGSI at **Display Additional Settings**. As these set values are not critical, the presettings may be left unchanged. If you want to change these values, refer to margin heading „Direction Determination with Zero-Sequence System“ for the angle determination.

The direction determination **POLARIZATION** with ***zero seq. power*** determines the directional characteristic by means of the compensation angle **PHI comp** (address 3168) which indicates the symmetry axis of the directional characteristic. This value is also not critical for direction determination. For information on the angle definition, refer to margin heading „Direction Determination with Zero-Sequence Power“. This angle determines at the same time the maximum sensitivity of the zero-sequence power stage thus also affecting indirectly the trip time as described above (margin heading „Zero-Sequence Power Stage“).

The ancillary function for increased directional sensitivity for long lines is set with parameter 3186 **3U0< forward**. With default setting **0**, the ancillary function is disabled. This parameter can only be altered in DIGSI at **Display Additional Settings**.

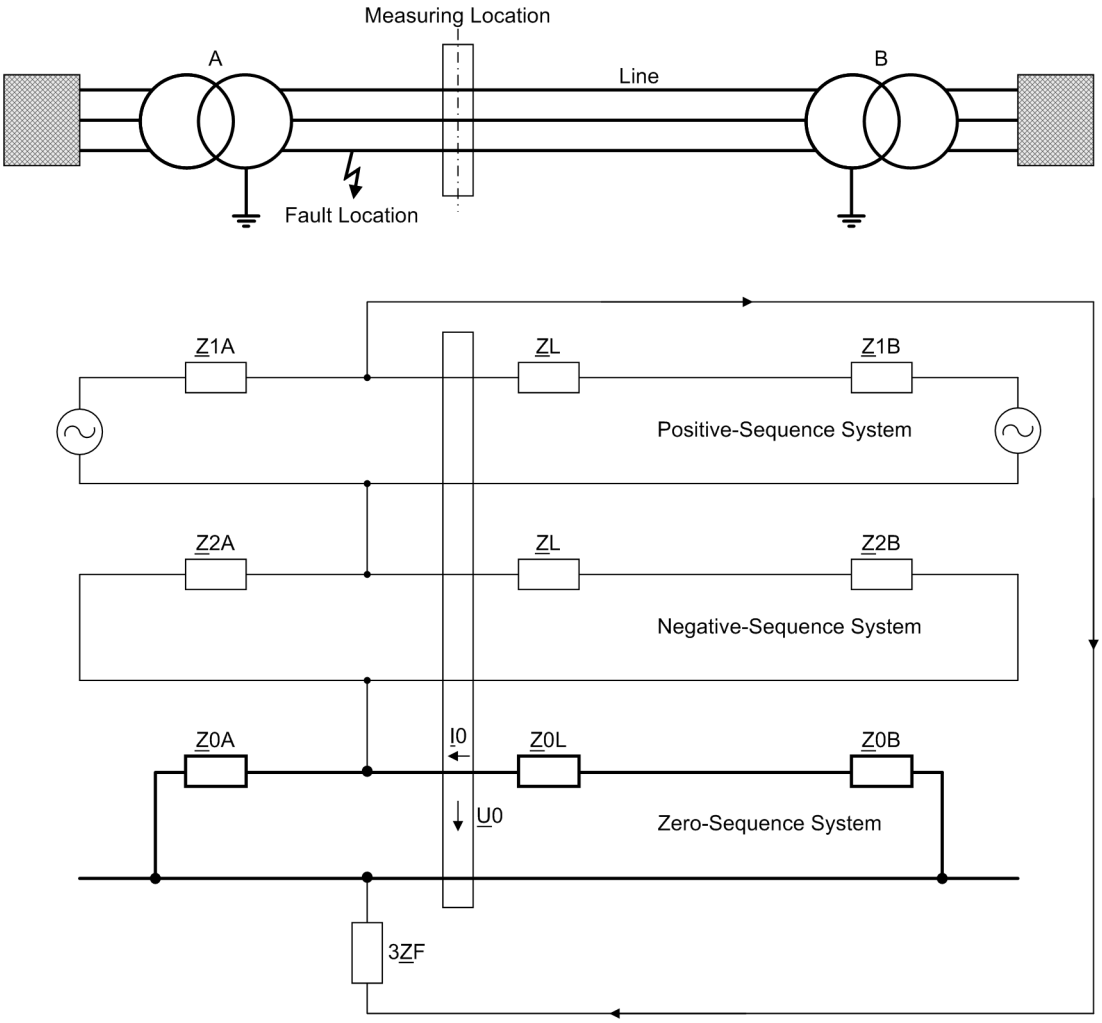

Figure 2-84 Power system diagram and symmetrical components for a single-pole earth fault in reverse direction

$\underline{Z}$1A, $\underline{Z}$2A, $\underline{Z}$0A Source impedance side A, symmetrical components

$\underline{Z}$1B, $\underline{Z}$2B, $\underline{Z}$0B Source impedance side B, symmetrical components

$\underline{Z}$L, $\underline{Z}$0L Line impedance, positive sequence and zero-sequence impedance

$\underline{Z}$F Fault impedance

For the protection of lines whose zero-sequence impedance is significantly higher than the infeed zero-sequence impedance ($\underline{Z}_{0L} + \underline{Z}_{0B} > \underline{Z}_{0A}$ in Figure 2-84), the following setting is recommended for parameter 3186 **3U0< forward**:

3U0< forward = 0,8 * **3IO>**·(lowest directional stage)·* $\underline{Z}_{0L}$

Additional safety can be obtained through the zero-sequence impedance of the infeed at the opposite line end, which is not taken into account in the formula ($\underline{Z}_{0B}$ in Figure 2-84).

In lines with series compensation, it is possible to compensate the negative influence of the series capacitor on the directional determination of the earth fault protection. For this purpose, the reactance of the series capacitor must be entered in parameter 3187 **XserCap**. To prevent the compensation from falsifying the direction measurement in case of reverse faults, the parameter 3187 **XserCap** must be set lower or equal to the zero-sequence reactance of the line.

For lines without series compensation, do not change the default setting 0 of parameter XSerCapac (address 3187, default setting **0**). The voltage U_P used for directional determination remains unchanged in this case.

Teleprotection with earth fault protection

The earth fault protection in the 7SA522 may be expanded to a directional comparison protection using the integrated teleprotection logic. Additional information regarding the available teleprotection schemes and their modes of operation may be obtained from Section 2.8. If this is to be used, certain preconditions must already be observed when setting the earth current stage.

Initially, it must be determined which stage is to operate in conjunction with the teleprotection scheme. This stage must be set directional in the line direction. If, for example, the $3I_0$> stage should operate as directional comparison, set address 3130 **Op. mode 3IO>** = ***Forward*** (see above „Definite Time Stages“).

Furthermore, the device must be informed that the applicable stage functions together with the teleprotection to allow undelayed release of the tripping during internal faults. For the $3I_0$> stage this means that address 3133 **3IO> Telep/BI** is set to ***YES***. The time delay **T 3IO>** set for this stage (address 3132) then functions as a back-up stage, e.g. during failure of the signal transmission. For the remaining stages the corresponding parameter is set to ***NO***, therefore, in this example: address 3123 **3IO>> Telep/BI** for stage $3I_0$>>, address 3113 **3IO>>> Telep/BI** for stage $3I_0$>>>, address 3148 **3IOp Telep/BI** for stage $3I_{0P}$ (if used).

If the echo function is used in conjunction with the teleprotection scheme, or if the weak-infeed tripping function should be used, the additional teleprotection stage **3IoMin Teleprot** (address 3105) must be set to avoid unselective tripping during through-fault earth current measurement. For further information, see Section 2.8, margin heading „Earth Fault Protection Prerequisites“.

Switching onto an earth fault

It is possible to determine with a setting which stage trips without delay following closure onto a dead fault. The parameters **3IO>>>SOTF-Trip** (address 3114), **3IO>> SOTF-Trip** (address 3124), **3IO> SOTF-Trip** (address 3134) and, if necessary, **3IOp SOTF-Trip** (address 3149) are available for the stages and can be set to ***YES*** or ***NO*** for each stage. Selection of the most sensitive stage is usually not reasonable as a solid short-circuit may be assumed following switching onto a fault, whereas the most sensitive stage often also has to detect high resistance faults. It is important to avoid that the selected stage picks up due to transients during line energization.

On the other hand, it does not matter if a selected stage may pick up due to inrush conditions on transformers. The switch-onto-fault tripping by a stage is blocked by the inrush stabilization even if it is set as instantaneous switch-onto-fault stage.

To avoid a spurious pickup due to transient overcurrents, the delay **SOTF Time DELAY** (address 3173) can be set. Usually, the default setting **0** can be retained. In the case of long cables, where large peak inrush currents can occur, a short delay may be useful. The time delay depends on the severity and duration of the transient overcurrents as well as on which stages were selected for the fast switch onto fault clearance.

With the parameter **SOTF Op. Mode** (address 3172) it is finally possible to determine whether the fault direction must be checked (***PICKUP***+***DIRECT.***) or not (***PICKUP***), before a switch-onto-fault tripping is generated. It is the direction setting for each stage that applies for this direction check.

Phase current stabilization

To avoid spurious pickup of the stages in the case of asymmetrical load conditions or varying current transformer measuring errors in earthed systems, the earth current stages are restrained by the phase currents: as the phase currents increase, the pickup thresholds are increased. By means of the setting in address 3104 **Iph-STAB. Slope** the preset value of 10 % for all stages can be jointly changed for all stages. This parameter can only be changed in DIGSI at **Display Additional Settings**.

Inrush restraint

The inrush restraint is only required if the device is applied to transformer feeders or on lines that end on a transformer; in this case also only for such stages that have a pickup threshold below the inrush current and have a very short or zero delay. The parameters **3IO>>>InrushBlk** (address 3115), **3IO>> InrushBlk** (address 3125), **3IO> InrushBlk** (address 3135) and **3IOp InrushBlk** (address 3150) can be set to ***YES*** (inrush restraint active) or ***NO*** (inrush restraint inactive) for each stage. If the inrush restraint has been disabled for all stages, the following parameters are of no consequence.

For the recognition of the inrush current, the portion of second harmonic current content referred to the fundamental current component can be set in address 3170 **2nd InrushRest**. Above this threshold the inrush blocking is effective. The preset value (15 %) should be sufficient in most cases. Lower values imply higher sensitivity of the inrush blocking (smaller portion of second harmonic current results in blocking).

In applications on transformer feeders or lines that are terminated on transformers it may be assumed that, if very large currents occur, a short-circuit has occurred before the transformer. In the event of such large currents, the inrush restraint is inhibited. This threshold value which is set in the address 3171 **Imax InrushRest**, should be larger than the maximum expected inrush current (RMS value).

2.7.3 Settings

Addresses which have an appended "A" can only be changed with DIGSI, under Additional Settings.

The table indicates region-specific presettings. Column C (configuration) indicates the corresponding secondary nominal current of the current transformer.

Addr.	Parameter	C	Setting Options	Default Setting	Comments
3101	FCT EarthFltO/C		ON OFF	ON	Earth Fault overcurrent function
3102	BLOCK for Dist.		every PICKUP 1phase PICKUP multiph. PICKUP NO	every PICKUP	Block E/F for Distance protection
3103	BLOCK 1pDeadTim		YES NO	YES	Block E/F for 1pole Dead time
3104A	Iph-STAB. Slope		0 .. 30 %	10 %	Stabilisation Slope with Iphase
3105	3IoMin Teleprot	1A	0.01 .. 1.00 A	0.50 A	3Io-Min threshold for Teleprot. schemes
		5A	0.05 .. 5.00 A	2.50 A	
3105	3IoMin Teleprot	1A	0.003 .. 1.000 A	0.500 A	3Io-Min threshold for Teleprot. schemes
		5A	0.015 .. 5.000 A	2.500 A	
3109	Trip 1pole E/F		YES NO	YES	Single pole trip with earth flt.prot.
3110	Op. mode 3I0>>>		Forward Reverse Non-Directional Inactive	Inactive	Operating mode
3111	3I0>>>	1A	0.05 .. 25.00 A	4.00 A	3I0>>> Pickup
		5A	0.25 .. 125.00 A	20.00 A	
3112	T 3I0>>>		0.00 .. 30.00 sec; ∞	0.30 sec	T 3I0>>> Time delay

Addr.	Parameter	C	Setting Options	Default Setting	Comments
3113	3I0>>> Telep/BI		NO YES	NO	Instantaneous trip via Teleprot./BI
3114	3I0>>>SOTF-Trip		NO YES	NO	Instantaneous trip after SwitchOnToFault
3115	3I0>>>InrushBlk		NO YES	NO	Inrush Blocking
3116	BLK /1p 3I0>>>		YES No (non-dir.)	YES	Block 3I0>>> during 1pole dead time
3117	Trip 1p 3I0>>>		YES NO	YES	Single pole trip with 3I0>>>
3120	Op. mode 3I0>>		Forward Reverse Non-Directional Inactive	Inactive	Operating mode
3121	3I0>>	1A	0.05 .. 25.00 A	2.00 A	3I0>> Pickup
		5A	0.25 .. 125.00 A	10.00 A	
3122	T 3I0>>		0.00 .. 30.00 sec; ∞	0.60 sec	T 3I0>> Time Delay
3123	3I0>> Telep/BI		NO YES	NO	Instantaneous trip via Teleprot./BI
3124	3I0>> SOTF-Trip		NO YES	NO	Instantaneous trip after SwitchOnToFault
3125	3I0>> InrushBlk		NO YES	NO	Inrush Blocking
3126	BLK /1p 3I0>>		YES No (non-dir.)	YES	Block 3I0>> during 1pole dead time
3127	Trip 1p 3I0>>		YES NO	YES	Single pole trip with 3I0>>
3130	Op. mode 3I0>		Forward Reverse Non-Directional Inactive	Inactive	Operating mode
3131	3I0>	1A	0.05 .. 25.00 A	1.00 A	3I0> Pickup
		5A	0.25 .. 125.00 A	5.00 A	
3131	3I0>	1A	0.003 .. 25.000 A	1.000 A	3I0> Pickup
		5A	0.015 .. 125.000 A	5.000 A	
3132	T 3I0>		0.00 .. 30.00 sec; ∞	0.90 sec	T 3I0> Time Delay
3133	3I0> Telep/BI		NO YES	NO	Instantaneous trip via Teleprot./BI
3134	3I0> SOTF-Trip		NO YES	NO	Instantaneous trip after SwitchOnToFault
3135	3I0> InrushBlk		NO YES	NO	Inrush Blocking
3136	BLK /1p 3I0>		YES No (non-dir.)	YES	Block 3I0> during 1pole dead time

Addr.	Parameter	C	Setting Options	Default Setting	Comments
3137	Trip 1p 3I0>		YES NO	YES	Single pole trip with 3I0>
3140	Op. mode 3I0p		Forward Reverse Non-Directional Inactive	Inactive	Operating mode
3141	3I0p PICKUP	1A	0.05 .. 25.00 A	1.00 A	3I0p Pickup
		5A	0.25 .. 125.00 A	5.00 A	
3141	3I0p PICKUP	1A	0.003 .. 25.000 A	1.000 A	3I0p Pickup
		5A	0.015 .. 125.000 A	5.000 A	
3142	3I0p MinT-DELAY		0.00 .. 30.00 sec	1.20 sec	3I0p Minimum Time Delay
3143	3I0p Time Dial		0.05 .. 3.00 sec; ∞	0.50 sec	3I0p Time Dial
3144	3I0p Time Dial		0.50 .. 15.00 ; ∞	5.00	3I0p Time Dial
3145	3I0p Time Dial		0.05 .. 15.00 sec; ∞	1.35 sec	3I0p Time Dial
3146	3I0p MaxT-DELAY		0.00 .. 30.00 sec	5.80 sec	3I0p Maximum Time Delay
3147	Add.T-DELAY		0.00 .. 30.00 sec; ∞	1.20 sec	Additional Time Delay
3148	3I0p Telep/BI		NO YES	NO	Instantaneous trip via Tele-prot./BI
3149	3I0p SOTF-Trip		NO YES	NO	Instantaneous trip after SwitchOnToFault
3150	3I0p InrushBlk		NO YES	NO	Inrush Blocking
3151	IEC Curve		Normal Inverse Very Inverse Extremely Inv. LongTimeInverse	Normal Inverse	IEC Curve
3152	ANSI Curve		Inverse Short Inverse Long Inverse Moderately Inv. Very Inverse Extremely Inv. Definite Inv.	Inverse	ANSI Curve
3153	LOG Curve		Log. inverse	Log. inverse	LOGARITHMIC Curve
3154	3I0p Startpoint		1.0 .. 4.0	1.1	Start point of inverse characteristic
3155	k		0.00 .. 3.00 sec	0.50 sec	k-factor for Sr-characteristic
3156	S ref	1A	1 .. 100 VA	10 VA	S ref for Sr-characteristic
		5A	5 .. 500 VA	50 VA	
3157	BLK /1p 3I0p		YES No (non-dir.)	YES	Block 3I0p during 1pole dead time
3158	Trip 1p 3I0p		YES NO	YES	Single pole trip with 3I0p

Addr.	Parameter	C	Setting Options	Default Setting	Comments
3160	POLARIZATION		U0 + IY or U2 U0 + IY with IY only with U2 and I2 zero seq. power	U0 + IY or U2	Polarization
3162A	Dir. ALPHA		0 .. 360 °	338 °	ALPHA, lower angle for forward direction
3163A	Dir. BETA		0 .. 360 °	122 °	BETA, upper angle for forward direction
3164	3U0>		0.5 .. 10.0 V	0.5 V	Min. zero seq.voltage 3U0 for polarizing
3165	IY>	1A	0.05 .. 1.00 A	0.05 A	Min. earth current IY for polarizing
		5A	0.25 .. 5.00 A	0.25 A	
3166	3U2>		0.5 .. 10.0 V	0.5 V	Min. neg. seq. polarizing voltage 3U2
3167	3I2>	1A	0.05 .. 1.00 A	0.05 A	Min. neg. seq. polarizing current 3I2
		5A	0.25 .. 5.00 A	0.25 A	
3168	PHI comp		0 .. 360 °	255 °	Compensation angle PHI comp. for Sr
3169	S forward	1A	0.1 .. 10.0 VA	0.3 VA	Forward direction power threshold
		5A	0.5 .. 50.0 VA	1.5 VA	
3170	2nd InrushRest		10 .. 45 %	15 %	2nd harmonic ratio for inrush restraint
3171	Imax InrushRest	1A	0.50 .. 25.00 A	7.50 A	Max.Current, overriding inrush restraint
		5A	2.50 .. 125.00 A	37.50 A	
3172	SOTF Op. Mode		PICKUP PICKUP+DIRECT.	PICKUP+DIRECT.	Instantaneous mode after SwitchOnToFault
3173	SOTF Time DELAY		0.00 .. 30.00 sec	0.00 sec	Trip time delay after SOTF
3174	BLK for DisZone		in zone Z1 in zone Z1/Z1B in each zone	in each zone	Block E/F for Distance Protection Pickup
3182	3U0>(U0 inv)		1.0 .. 10.0 V	5.0 V	3U0> setpoint
3183	U0inv. minimum		0.1 .. 5.0 V	0.2 V	Minimum voltage U0min for T->oo
3184	T forw. (U0inv)		0.00 .. 32.00 sec	0.90 sec	T-forward Time delay (U0inv)
3185	T rev. (U0inv)		0.00 .. 32.00 sec	1.20 sec	T-reverse Time delay (U0inv)
3186A	3U0< forward		0.1 .. 10.0 V; 0	0.0 V	3U0 min for forward direction
3187A	XserCap	1A	0.000 .. 600.000 Ω	0.000 Ω	Reactance X of series capacitor
		5A	0.000 .. 120.000 Ω	0.000 Ω	

2.7.4 Information List

No.	Information	Type of Information	Comments
1305	>EF BLK 3I0>>>	SP	>Earth Fault O/C Block 3I0>>>
1307	>EF BLOCK 3I0>>	SP	>Earth Fault O/C Block 3I0>>
1308	>EF BLOCK 3I0>	SP	>Earth Fault O/C Block 3I0>
1309	>EF BLOCK 3I0p	SP	>Earth Fault O/C Block 3I0p
1310	>EF InstTRIP	SP	>Earth Fault O/C Instantaneous trip
1331	E/F Prot. OFF	OUT	Earth fault protection is switched OFF
1332	E/F BLOCK	OUT	Earth fault protection is BLOCKED
1333	E/F ACTIVE	OUT	Earth fault protection is ACTIVE
1335	EF TRIP BLOCK	OUT	Earth fault protection Trip is blocked
1336	E/F L1 selec.	OUT	E/F phase selector L1 selected
1337	E/F L2 selec.	OUT	E/F phase selector L2 selected
1338	E/F L3 selec.	OUT	E/F phase selector L3 selected
1345	EF Pickup	OUT	Earth fault protection PICKED UP
1354	EF 3I0>>>Pickup	OUT	E/F 3I0>>> PICKED UP
1355	EF 3I0>> Pickup	OUT	E/F 3I0>> PICKED UP
1356	EF 3I0> Pickup	OUT	E/F 3I0> PICKED UP
1357	EF 3I0p Pickup	OUT	E/F 3I0p PICKED UP
1358	EF forward	OUT	E/F picked up FORWARD
1359	EF reverse	OUT	E/F picked up REVERSE
1361	EF Trip	OUT	E/F General TRIP command
1362	E/F Trip L1	OUT	Earth fault protection: Trip 1pole L1
1363	E/F Trip L2	OUT	Earth fault protection: Trip 1pole L2
1364	E/F Trip L3	OUT	Earth fault protection: Trip 1pole L3
1365	E/F Trip 3p	OUT	Earth fault protection: Trip 3pole
1366	EF 3I0>>> TRIP	OUT	E/F 3I0>>> TRIP
1367	EF 3I0>> TRIP	OUT	E/F 3I0>> TRIP
1368	EF 3I0> TRIP	OUT	E/F 3I0> TRIP
1369	EF 3I0p TRIP	OUT	E/F 3I0p TRIP
1370	EF InrushPU	OUT	E/F Inrush picked up
14080	E/F 3I0>>>BLOCK	OUT	E/F 3I0>>> is blocked
14081	E/F 3I0>> BLOCK	OUT	E/F 3I0>> is blocked
14082	E/F 3I0> BLOCK	OUT	E/F 3I0> is blocked
14083	E/F 3I0p BLOCK	OUT	E/F 3I0p is blocked

2.8 Teleprotection for earth fault overcurrent protection (optional)

2.8.1 General

With the aid of the integrated comparison logic, the directional earth fault protection according to Section 2.7 can be expanded to a directional comparison protection scheme.

Transmission Modes

One of the stages which must be directional ***Forward*** is used for the directional comparison. This stage can only trip rapidly if a fault is also detected in the forward direction at the other line end. A release (unblock) signal or a block signal can be transmitted.

The following permissive teleprotection schemes are available:

- Directional comparison,
- Directional unblock scheme

and blocking scheme:

- Blocking of the directional stage.

Further stages can be set as directional and/or non-directional backup stages.

Information on the effect of the phase selector on the release signals can be found in Section 2.7 under margin heading „Selection of the Earth Faulted Phase“.

Transmission Channels

For the signal transmission, one channel in each direction is required. Fibre optic connections or voice frequency modulated high frequency channels via pilot cables, power line carrier or microwave radio links can be used for this purpose. If the same transmission channel is used as for the transmission by the distance protection, the transmission mode must also be the same!

If the device is equipped with an optional protection data interface, digital communication lines can be used for signal processing; these include: Fibre optic cables, communication networks or dedicated lines. The following teleprotection scheme is suited for these kinds of transmission:

- Directional comparison

7SA522 allows also the transmission of phase-segregated signals. This has the advantage that single-pole automatic reclosure can be carried out even when two single-phase faults occur on different lines in the system. When using the digital protection data interface, signal transmission is always phase-selective. If no single-phase fault is detected, the signals are transmitted for all three phases. With earth fault protection, phase-selective transmission only makes sense if the earth faulted phase is identified by means of the phase selector (address 3109 **Trip 1pole E/F** is set to ***YES***, refer also to Section 2.7 under „Tripping“).

The signal transmission schemes are also suited to three terminal lines (teed feeders). In this case, signal transmission channels are required from each of the three ends to each of the others in both directions. Phase segregated transmission is only possible for three terminal line applications if digital communication channels are used.

During disturbances on the transmission path, the teleprotection supplement may be blocked. With conventional signal transmission schemes, the disturbance is signalled by a binary input, with digital communication it is detected automatically by the protection device.

Activation and Deactivation

The comparison function can be switched on and off by means of the parameter 3201 **FCT Telep. E/F**, via the system interface (if available) and via binary inputs (if allocated). The switch states are saved internally (refer to Figure 2-85) and secured against loss of auxiliary supply. It is only possible to switch on from the source from where it had previously been switched off. To be active, it is necessary that the function is switched on from all three switching sources.

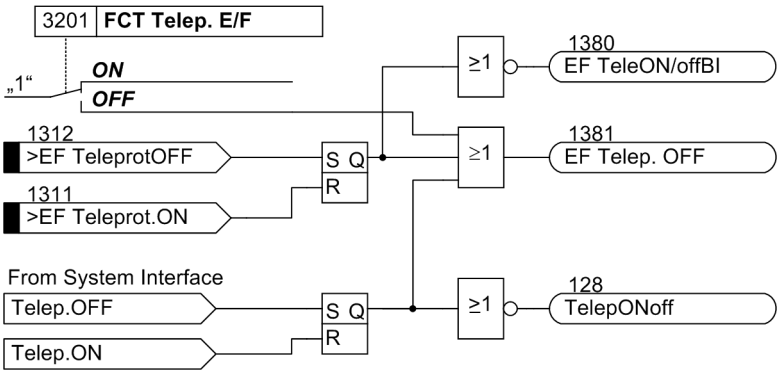

Figure 2-85 Activation and deactivation of the signal transmission logic

2.8.2 Directional Comparison Pickup

The following procedure is suited for both conventional and digital transmission media.

Principle

The directional comparison scheme is a permissive scheme. The scheme functionality is shown in Figure 2-86.

When the earth fault protection recognizes a fault in the forward direction, it initially sends a permissive signal to the opposite line end. If a permissive signal is also received from the opposite end, a trip signal is routed to the trip logic. Accordingly it is a prerequisite for fast tripping that the fault is recognized in the forward direction at both line ends.

The send signal can be prolonged by T_S (settable). The prolongation of the send signal only comes into effect if the protection has already issued a trip command. This ensures that the permissive signal releases the opposite line end even if the earth fault is very rapidly cleared by a different independent protection.

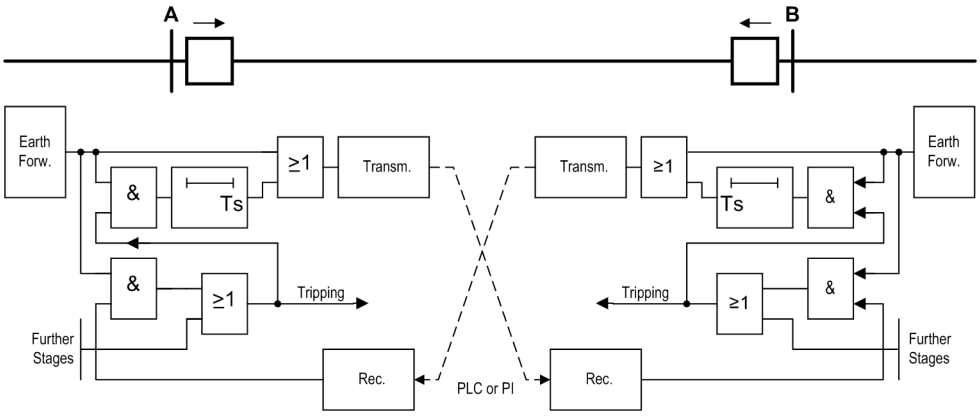

Figure 2-86 Operation scheme of the directional comparison pickup

Sequence

Figure 2-87 shows the logic diagram of the directional comparison scheme for one line end.

The directional comparison only functions for faults in the „Forward“ direction. Accordingly the overcurrent stage intended for operation in the direction comparison mode must definitely be set to ***Forward*** (***3IO... DIRECTION***); refer also to Section 2.7 under margin heading „Teleprotection with Earth Fault Protection“.

On two terminal lines, the signal transmission may be phase segregated. In this case, send and receive circuits operate separately for each phase. On three terminal lines, the transmit signals are sent to both opposite line ends. The receive signals are then combined with a logical AND gate, as all three line ends must transmit a send signal during an internal fault. With the parameter **Line Config.** (address 3202) the device is informed as to whether it has one or two opposite line ends. If the parameter **Teleprot. E/F** (address 132) is set to ***SIGNALv.ProtInt*** and parameter **NUMBER OF RELAY** (address 147) is set to ***3 relays***, the device is informed about two remote ends. The default setting is ***2 relays***, which corresponds to one remote end.

The occurrence of erroneous signals resulting from transients during clearance of external faults or from direction reversal resulting during the clearance of faults on parallel lines, is neutralized by the „Transient Blocking“ (see margin heading „Transient Blocking“).

On lines where there is only a single-sided infeed or where the starpoint is only earthed behind one line end, the line end without zero sequence current cannot generate a release signal as fault detection does not take place there. To ensure tripping by the directional comparison also in this case, the device has special features. This „Weak Infeed Function“ (echo function) is referred to at the margin heading „Echo function“. It is activated when a signal is received from the opposite line end — in the case of three terminal lines from at least one of the opposite line ends — without the device having detected a fault.

The circuit breaker can also be tripped at the line end with no or only weak infeed. This „weak-infeed tripping“ is referred to in Section 2.9.2.

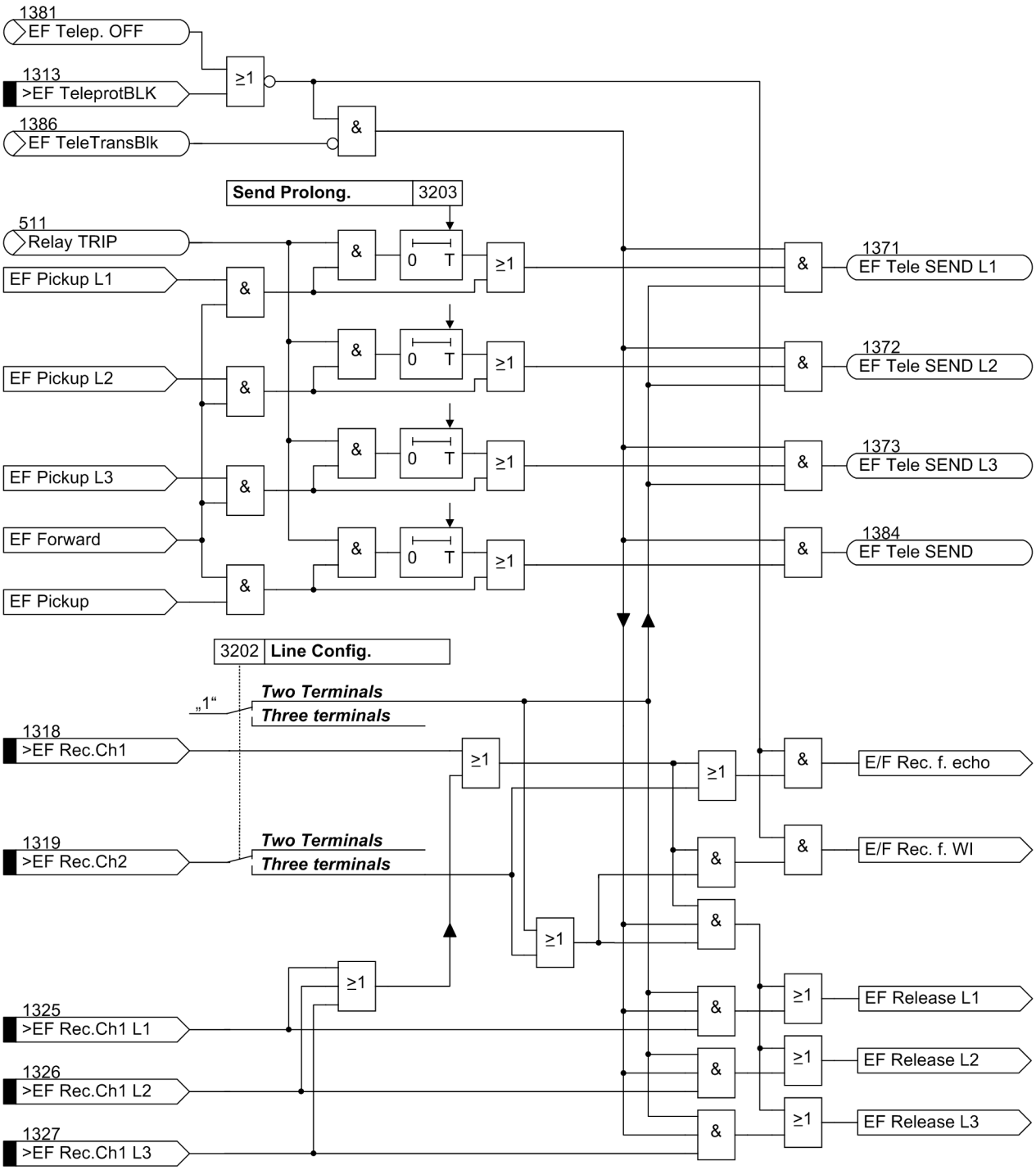

Figure 2-87 Logic diagram of the directional comparison scheme (one line end)

Figure 2-88 shows the logic diagram of the directional comparison scheme for one line end with protection interface.

For earth fault protection, only directional comparison pickup is offered for transmission via protection interface. The directional comparison pickup scheme is only effective if the parameter 132 **Teleprot. E/F** has been set to ***SIGNALv.ProtInt*** in all devices of the setup. The message „Par. different“ is sent in the event of a fault.

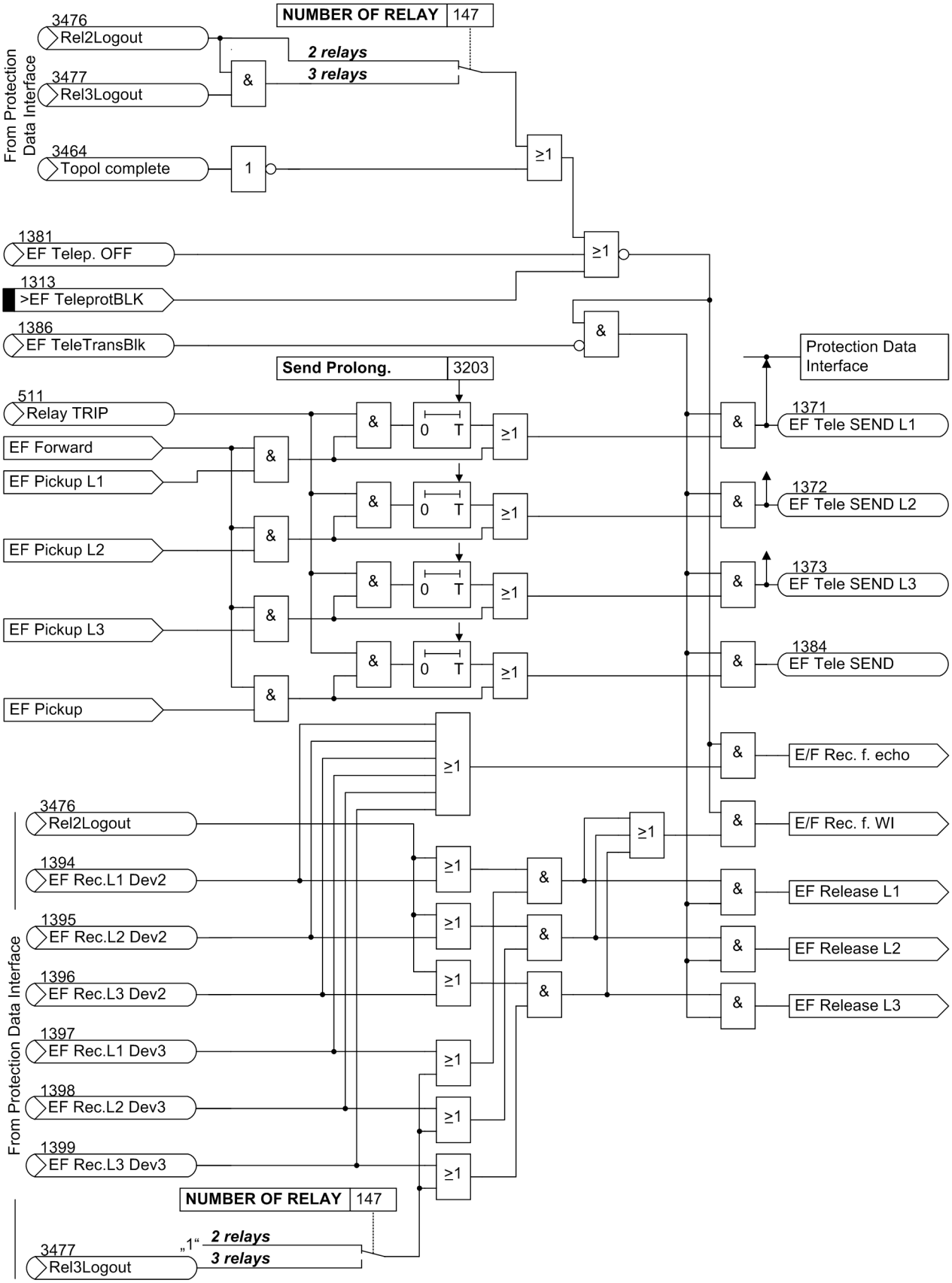

Figure 2-88 Logic diagram of the directional comparison scheme with protection data interface (for one device)

2.8.3 Directional Unblocking Scheme

The following scheme is suited for conventional transmission media.

Principle

The unblocking method is a permissive scheme. It differs from the directional comparison scheme in that tripping is possible also when no release signal is received from the opposite line end. It is therefore mainly used for long lines when the signal must be transmitted across the protected feeder by means of power line carrier (PLC) and the attenuation of the transmitted signal at the fault location may be so severe that reception at the other line cannot necessarily be guaranteed.

The scheme functionality is shown in Figure 2-89.

Two signal frequencies which are keyed by the transmit output of the 7SA522 are required for the transmission. If the transmission device has a channel monitoring, then the monitoring frequency f_0 is keyed over to the working frequency f_U (unblocking frequency). When the protection recognizes an earth fault in the forward direction, it initiates the transmission of the unblock frequency f_U. During the quiescent state or during an earth fault in the reverse direction, the monitoring frequency f_0 is transmitted.

If a release signal is also received from the opposite end, the trip signal is forwarded to the command relay. A pre-condition for fast fault clearance is therefore that the earth fault is recognized in the forward direction at both line ends.

The send signal can be prolonged by T_S (settable). The prolongation of the send signal only comes into effect if the protection has already issued a trip command. This ensures that the permissive signal releases the opposite line end even if the earth fault is very rapidly cleared by a different independent protection.

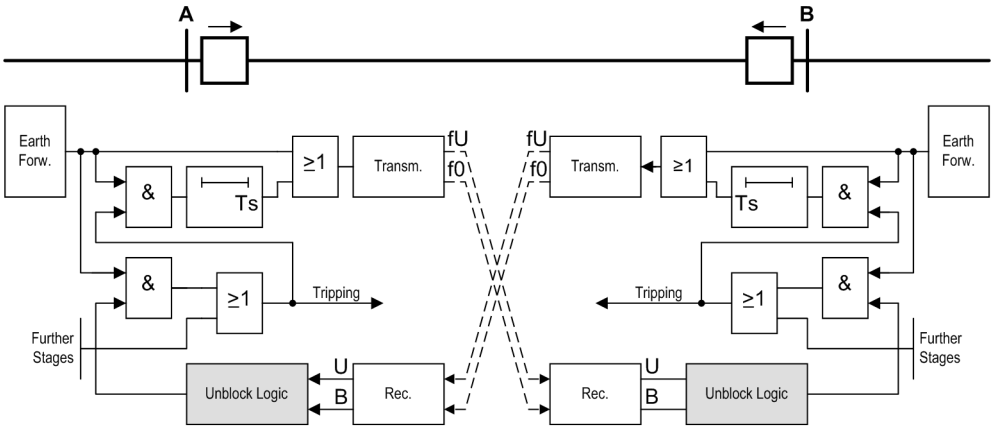

Figure 2-89 Operation scheme of the directional unblocking method

Sequence

Figure 2-90 shows the logic diagram of the unblocking scheme for one line end.

The directional unblocking scheme only functions for faults in the „forward“ direction. Accordingly the overcurrent stage intended for operation in the directional unblocking scheme must definitely be set to ***Forward*** (***RICH.3IO...***); refer also to Section 2.7 at the margin heading „Teleprotection with Earth Fault Protection“.

On two terminal lines, the signal transmission may be phase segregated. In this case, send and receive circuits operate separately for each phase. On three terminal lines, the transmit signals are sent to both opposite line ends. The receive signals are then combined with a logical AND gate, as all three line ends must transmit a send signal during an internal fault. With the parameter **Line Config.** (address 3202) the device is informed as to whether it has one or two opposite line ends.

An unblock logic is inserted before the receive logic, which in essence corresponds to that of the directional comparison scheme, see Figure 2-91. If an interference free unblock signal is received, a receive signal, e.g. „>EF UB ub 1“, appears and the blocking signal, e.g. „>EF UB bl 1“ disappears. The internal signal „Unblock 1“ is passed on to the receive logic, where it initiates the release of the tripping (when all remaining conditions have been fulfilled).

If the transmitted signal does not reach the other line end because the short-circuit on the protected feeder causes too much attenuation or reflection of the transmitted signal, the unblock logic takes effect: neither the unblocking signal „>EF UB ub 1“ nor the monitoring signal „>EF UB bl 1“ are received. In this case, the release „Unblock 1“ is issued after a security delay time of 20 ms and passed onto the receive logic. This release is however removed after a further 100 ms via the timer stage 100/100 ms. When the transmission is functional again, one of the two receive signals must appear again, either „>EF UB ub 1“or „>EF UB bl 1“; after a further 100 ms (dropout delay of the timer stage 100/100 ms) the quiescent state is reached again, i.e. the direct release path to the signal „Unblock 1“ and thereby the usual release is possible. On three terminal lines, the unblock logic can be controlled via both receive channels.

If none of the signals is received for a period of more than 10 s the alarm „EF TeleUB Fail1“ is generated.

The occurrence of erroneous signals resulting from transients during clearance of external faults or from direction reversal resulting during the clearance of faults on parallel lines, is neutralized by the „Transient Blocking“.

On lines where there is only a single-sided infeed or where the starpoint is only earthed behind one line end, the line end without zero sequence current cannot generate a release signal as fault detection does not take place there. To ensure tripping by the directional comparison also in this case, the device has special features. This „Weak Infeed Function“ is referred to in Section „Measures for Weak and Zero Infeed“. The function is activated when a signal is received from the opposite line end — in the case of three terminal lines from at least one of the opposite line ends — without the device having detected a fault.

The circuit breaker can also be tripped at the line end with no or only weak infeed. This „weak-infeed tripping“ is referred to in Section 2.9.2.

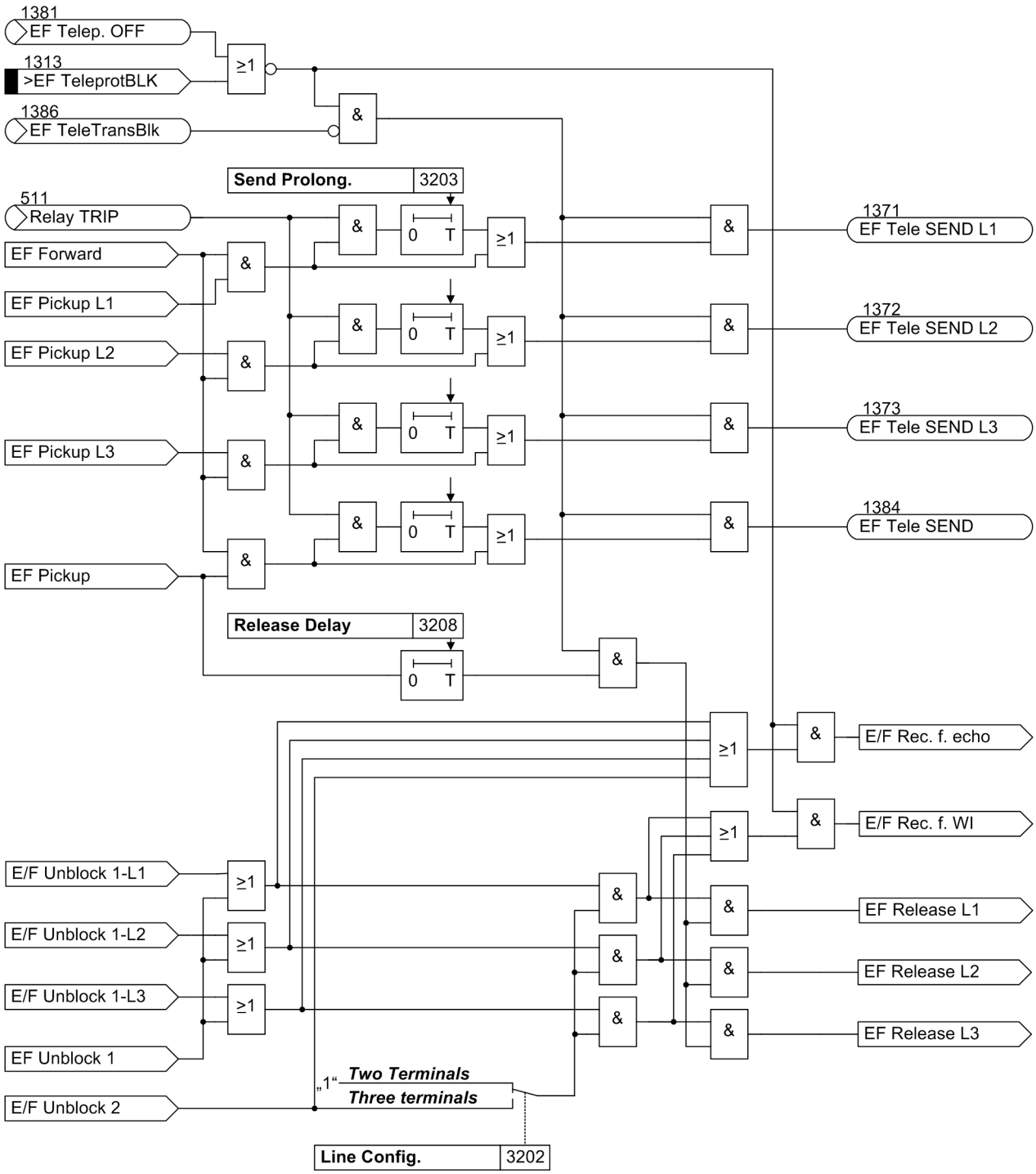

Figure 2-90 Logic diagram of the unblocking scheme (one line end)

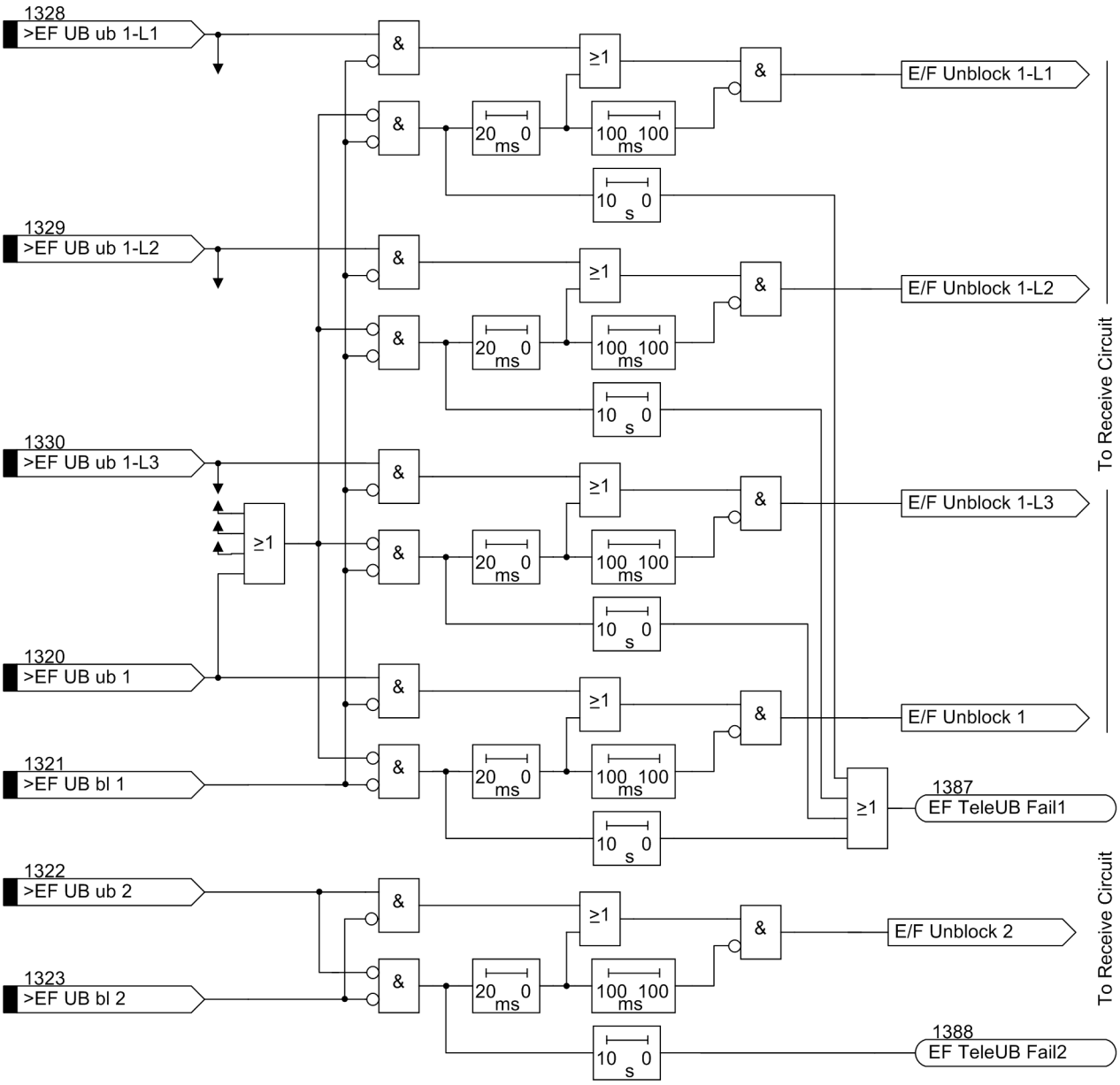

Figure 2-91 Unblock logic

2.8.4 Directional Blocking Scheme

The following scheme is suited for conventional transmission media.

Principle

In the case of the blocking scheme, the transmission channel is used to send a block signal from one line end to the other. The signal is sent as soon as the protection detects a fault in reverse direction, alternatively also immediately after fault inception (jump detector via dotted line). It is stopped immediately as soon as the earth fault protection detects an earth fault in forward direction. Tripping is possible with this scheme even if no signal is received from the opposite line end. It is therefore mainly used for long lines when the signal must be transmitted across the protected line by means of power line carrier (PLC) and the attenuation of the transmitted signal at the fault location may be so severe that reception at the other line end cannot necessarily be guaranteed.

The scheme functionality is shown in Figure 2-92.

Earth faults in the forward direction cause tripping if a blocking signal is not received from the opposite line end. Due to possible differences in the pickup times of the devices at both line ends and due to the signal transmission time delay, the tripping must be somewhat delayed by T_V in this case.

To avoid signal race conditions, a transmit signal can be prolonged by the settable time T_S once it has been initiated.

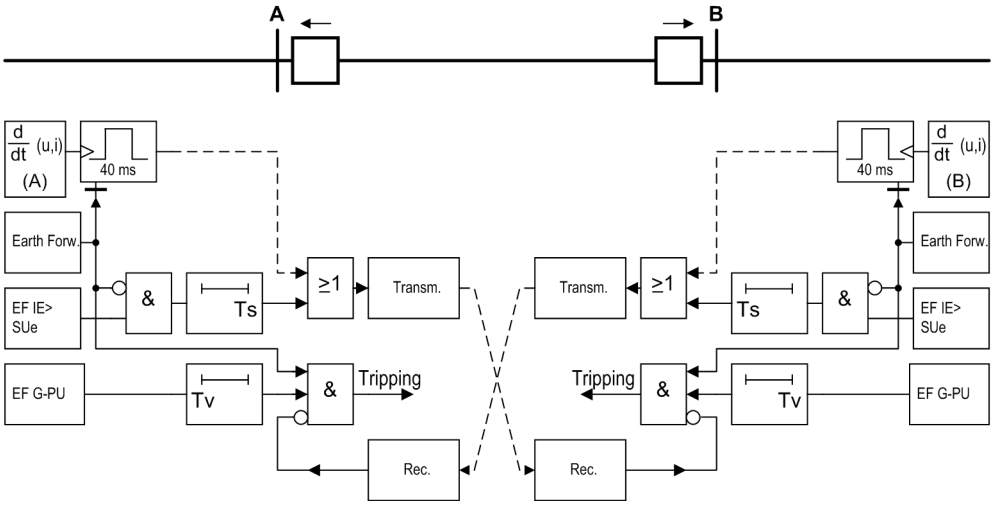

Figure 2-92 Operation scheme of the directional blocking method

Sequence

Figure 2-93 shows the logic diagram of the blocking scheme for one line end.

The stage to be blocked must be set to ***Forward*** (***3IO... DIRECTION***); refer also to Section 2.7 under margin heading „Teleprotection with Earth Fault Protection“.

On two terminal lines, the signal transmission may be phase segregated. In this case, send and receive circuits operate separately for each phase. On three terminal lines, the transmit signals are sent to both opposite line ends. The receive signals are then combined with a logical OR gate as no blocking signal must be received from any line end during an internal fault. With the parameter **`Line Config.`** (address 3202) the device is informed as to whether it has one or two opposite line ends.

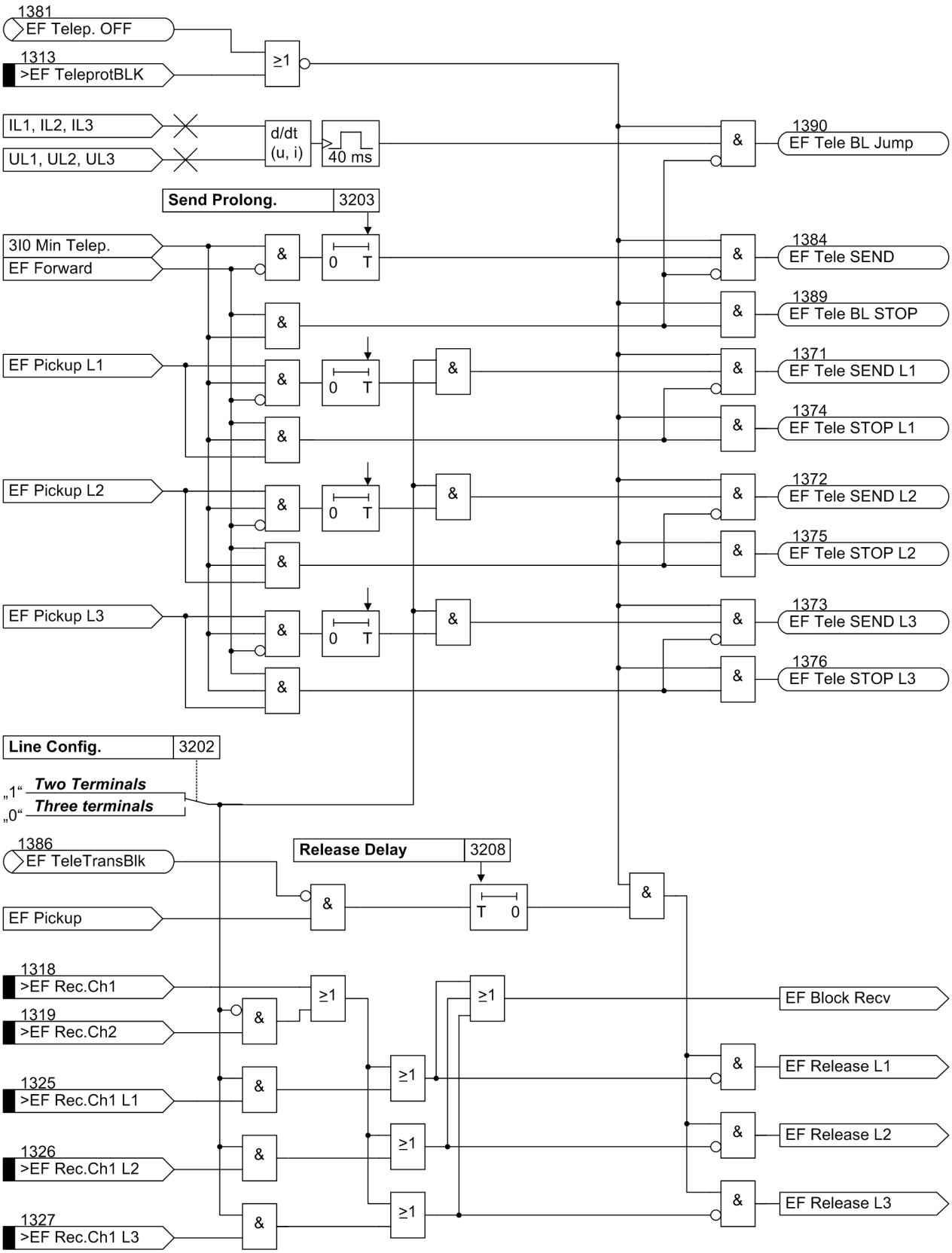

Figure 2-93 Logic diagram of the blocking scheme (one line end)

As soon as the earth fault protection has detected a fault in the reverse direction, a blocking signal is transmitted (e.g. „EF Tele SEND“, No. 1384). The transmitted signal may be prolonged by setting address 3203 accordingly. The blocking signal is stopped if a fault is detected in the forward direction (e.g. „EF Tele BL STOP“, No. 1389). Very rapid blocking is possible by transmitting also the output signal of the jump detector for measured values. To do so, the output„EF Tele BL Jump“ (No. 1390) must also be allocated to the transmitter output relay. As this jump signal appears at every measured value jump, it should only be used if the transmission channel can be relied upon to respond promptly to the disappearance of the transmitted signal.

The occurrence of erroneous signals resulting from transients during clearance of external faults or from direction reversal resulting during the clearance of faults on parallel lines is neutralised by „Transient blocking“. The received blocking signals also prolong the release by the transient blocking time **TrBlk BlockTime** (address 3210) if it has been present for at least the waiting time **TrBlk Wait Time** (address 3209), see Figure 2-94). After expiration of **TrBlk BlockTime** (address 3210) the delay time **Release Delay** (address 3208) is restarted.

It lies in the nature of the blocking scheme that single end fed short-circuits can also be tripped rapidly without any special measures, as the non-feeding end cannot generate a blocking signal.

2.8.5 Transient Blocking

Transient blocking provides additional security against erroneous signals due to transients caused by clearance of an external fault or by fault direction reversal during clearance of a fault on a parallel line.

The principle of transient blocking scheme is that following the incidence of an external fault, the formation of a release signal is prevented for a certain (settable) time. In the case of permissive schemes, this is achieved by blocking of the transmit and receive circuit.

Figure 2-94 shows the principle of the transient blocking.

If, following fault detection, a non-directional fault or a fault in the reverse direction is determined within the waiting time **TrBlk Wait Time** (address 3209), the transmit circuit and the trip release are prevented. This blocking is maintained for the duration of the transient blocking time **TrBlk BlockTime** (address 3210) also after the reset of the blocking criterion.

With the blocking scheme the transient blocking prolongs also the received blocking signal as shown in the logic diagram Figure 2-94. After expiration of **TrBlk BlockTime** (address 3210) the delay time **Release Delay** (address 3208) is restarted.

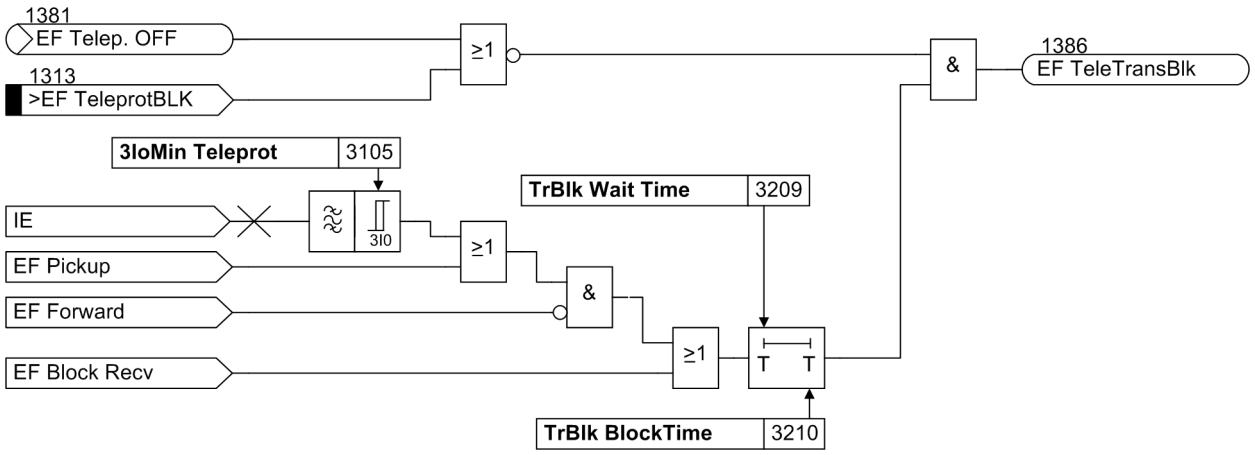

Figure 2-94 Transient blocking

2.8.6 Measures for Weak or Zero Infeed

On lines where there is only a single-sided infeed or where the starpoint is only earthed behind one line end, the line end without zero sequence current cannot generate a permissive signal, as fault detection does not take place there. With the comparison schemes, using a permissive signal, fast tripping could not even be achieved at the line end with strong infeed without special measures, as the end with weak infeed does not transmit a permissive release signal.

To achieve rapid tripping at both line ends under these conditions, the device has a special supplement for lines with weak zero sequence infeed.

To enable even the line end with the weak infeed to trip, 7SA522 provides a weak infeed tripping supplement. As this is a separate protection function with a dedicated trip command, it is described separately in Section 2.9.2.

Echo Function

The received signal at the line end that has no earth current is returned to the other line end as an „echo“ by the echo function. The received echo signal at the other line end enables the release of the trip command.

The common echo signal (see Figure , Section 2.9.1) is triggered both by the earth fault protection and by the distance protection. Figure 2-95 shows the generation of the echo release by the earth fault protection.

The detection of the weak infeed condition and accordingly the requirement for an echo are combined in a central AND gate. The earth fault protection must neither be switched off nor blocked, as it would otherwise always produce an echo due to the missing fault detection.

The essential condition for an echo is the absence of an earth current (current stage**`3IoMin Teleprot`**) with simultaneous receive signal from the teleprotection scheme logic, as shown in the corresponding logic diagrams (Figure 2-87, 2-88 or 2-90).

To prevent the generation of an echo signal after the line has been tripped and the earth current stage **`3IoMin Teleprot`** has reset, it is not possible to generate an echo if a fault detection by the earth current stage had already been present (RS flip-flop in Figure 2-95). The echo can in any event be blocked via the binary input „`>EF BlkEcho`“.

Figure 2-95 shows the generation of the echo release signal. Since there is a correlation between this function and the weak infeed tripping function, it is described separately (see Section 2.9.1).

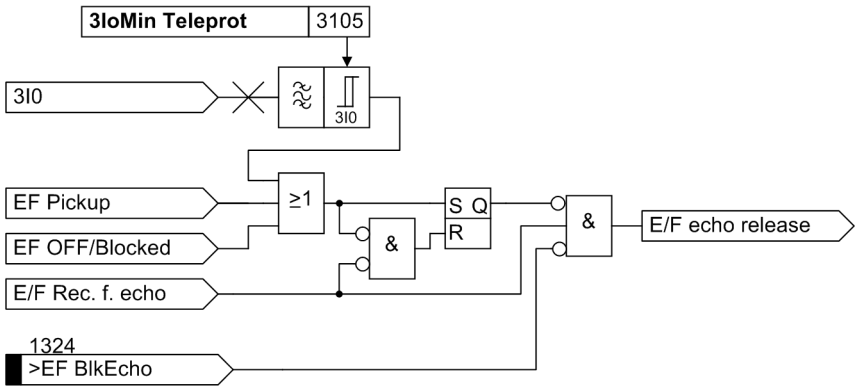

Figure 2-95 Generation of the echo release signal

2.8.7 Setting Notes

General

The teleprotection supplement for earth fault protection is only operational if it was set to one of the available modes during the configuration of the device (address 132). Depending on this configuration, only those parameters which are applicable to the selected mode appear here. If the teleprotection supplement is not required the address 132 is set to **Teleprot. E/F =** .

If a protection interface is available, the additional setting text ***SIGNALv.ProtInt*** is displayed in address 132 **Teleprot. E/F**.

Conventional Transmission

The following modes are possible with conventional transmission links (as described in Section 2.8):

Dir.Comp.Pickup Directional comparison pickup,

UNBLOCKING Directional unblocking scheme,

BLOCKING Directional blocking scheme.

At address 3201 **FCT Telep. E/F** the use of a teleprotection scheme can be switched ***ON*** or ***OFF***.

If the teleprotection has to be applied to a three terminal line, the setting in address 3202 must be **Line Config.** = ***Three terminals***, if not, the setting remains ***Two Terminals***.

Digital Transmission

The following mode is possible with digital transmission using the protection data interface:

SIGNALv.ProtInt Directional comparison pickup.

At address 3201 **FCT Telep. E/F** the use of a teleprotection scheme can be turned ***ON*** or ***OFF***. Address 147 **NUMBER OF RELAY** indicates the number of ends and must be set identically in all devices. The earth fault directional comparison pickup scheme via the protection interface is only active if parameter 132 **Teleprot. E/F** was set to ***SIGNALv.ProtInt*** for all devices in a constellation.

Earth Fault Protection Prerequisites

In the application of the comparison schemes, absolute care must be taken that both line ends recognize an external earth fault (earth fault through-current) in order to avoid a faulty echo signal in the case of the permissive schemes, or in order to ensure the blocking signal in the case of the blocking scheme. If, during an earth fault according to Figure 2-96, the protection at B does not recognize the fault, this would be interpreted as a fault with single-sided infeed from A (echo from B or no blocking signal from B), which would lead to unwanted tripping by the protection at A. Therefore, the earth fault protection features an earth fault stage **3IoMin Teleprot** (address 3105). This stage must be set more sensitive than the earth current stage used for the teleprotection. The larger the capacitive earth current (I_{EC} in Figure 2-96) is, the smaller this stage must be set. On overhead lines a setting equal to 70 % to 80 % of the earth current stage is usually adequate. On cables or very long lines where the capacitive currents in the event of an earth fault are of the same order of magnitude as the earth fault currents, the echo function should not be used or restricted to the case where the circuit breaker is open; the blocking scheme should not be used under these conditions at all.

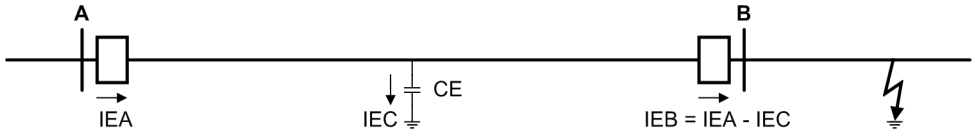

Figure 2-96 Possible current distribution during external earth fault

On three terminal lines (teed feeders) it should further be noted that the earth fault current is not equally distributed on the line ends during an external fault. The most unfavourable case is shown in Figure 2-97. In this case, the earth current flowing in from A is distributed equally on the line ends B and C. The setting value **3IoMin Teleprot** (address 3105), which is decisive for the echo or the blocking signal, must therefore be set smaller than one half of the setting value for the earth current stage used for teleprotection. In addition, the above comments regarding the capacitive earth current which is left out in Figure 2-97 apply. If the earth current distribution is different from the distribution assumed here, the conditions are more favourable as one of the two earth currents $\underline{I}_{EB}$ or $\underline{I}_{EC}$ must then be larger than in the situation described previously.

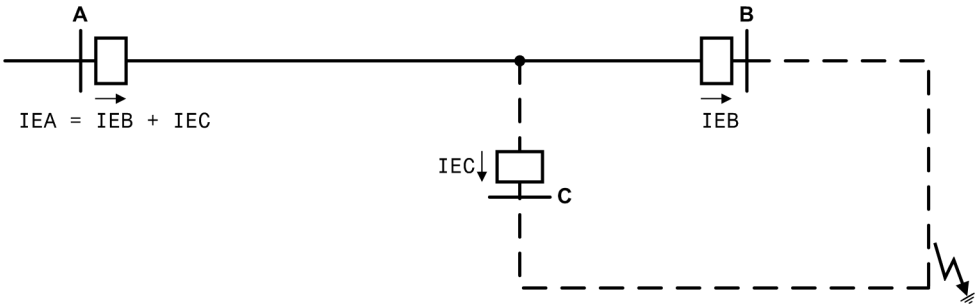

Figure 2-97 Possible unfavourable current distribution on a three terminal line during an external earth fault

Time Settings

The send signal prolongation **Send Prolong.** (address 3203) must ensure that the send signal reliably reaches the opposite line end, even if there is very fast tripping at the sending line end and/or the signal transmission time is relatively long. In the case of the permissive schemes ***Dir.Comp.Pickup*** and ***UNBLOCKING***, this signal prolongation time is only effective if the device has already issued a trip command. This ensures the release of the other line end even if the short-circuit is cleared very rapidly by a different protection function or other stage. In the case of the blocking scheme ***BLOCKING***, the transmit signal is always prolonged by this time. In this case, it corresponds to a transient blocking following a reverse fault. This parameter can only be altered in DIGSI at **Display Additional Settings**.

In order to detect steady-state line faults such as open circuits, a monitoring time **Delay for alarm** is started when a fault is detected (address 3207). Upon expiration of this time the fault is considered a permanent failure. This parameter can only be altered in DIGSI at **Display Additional Settings**.

The release of the directional tripping can be delayed by means of the permissive signal delay **Release Delay** (address 3208). In general, this is **only** required for the blocking scheme ***BLOCKING*** to allow sufficient transmission time for the blocking signal during external faults. This delay only has an effect on the receive circuit of the teleprotection. Conversely, tripping by the comparison protection is **not** delayed by the set time delay of the directional stage.

Transient Blocking

The setting parameters **TrBlk Wait Time** and **TrBlk BlockTime** are for the transient blocking with the comparison schemes. This parameter can only be changed in DIGSI at **Display Additional Settings**.

The time **TrBlk Wait Time** (address 3209) is a waiting time prior to transient blocking. In the case of the permissive schemes, only once the directional stage of the earth fault protection has recognized a fault in the reverse direction, within this period of time after fault detection, will the transient blocking be activated. In the case of the blocking scheme, the waiting time prevents transient blocking in the event that the blocking signal reception from the opposite line end is very fast. With the setting ∞ there is no transient blocking.

Note

The **TrBlk Wait Time** must not be set to zero to prevent unwanted activation of the transient blocking **TrBlk BlockTime** when the direction measurement is not as fast as the pick-up (signal transients). A setting of 10 ms to 40 ms is generally applicable depending on the operating (tripping) time of the relevant circuit breaker on the parallel line.

It is absolutely necessary that the transient blocking time **TrBlk BlockTime** (address 3210) is longer than the duration of transients resulting from the inception or clearance of external earth faults. The send signal is delayed by this time with the permissive overreach schemes ***Dir.Comp.Pickup*** and ***UNBLOCKING*** if the protection had initially detected a reverse fault. In the blocking scheme, the blocking of the stage release is prolonged by this time by both the detection of a reverse fault and the (blocking) received signal. After expiration of **TrBlk BlockTime** (address 3210) the delay time **Release Delay** (address 3208) is restarted. Since the blocking scheme always requires setting the delay time **Release Delay**, the transient blocking time **TrBlk BlockTime** (address 3210) can usually be set very short.

When the teleprotection schemes of the distance protection and earth fault protection share the same channel, **EF TRANSBLK DIS** (address 3212) should be set to ***YES***. This blocks also the distance protection if an external fault was previously detected by the earth fault protection only.

Echo Function

The echo function settings are common to all weak infeed measures and summarized in tabular form in Section 2.9.2.2.

Note

The „ECHO SIGNAL“ (No 4246) must be allocated separately to the output relays for the transmitter actuation, as it is not contained in the transmit signals of the transmission functions. On the digital protection data interface with permissive overreach transfer trip mode, the echo is transmitted as a separate signal without taking any special measures.

2.8.8 Settings

Addresses which have an appended "A" can only be changed with DIGSI, under Additional Settings.

Addr.	Parameter	Setting Options	Default Setting	Comments
3201	FCT Telep. E/F	ON OFF	ON	Teleprotection for Earth Fault O/C
3202	Line Config.	Two Terminals Three terminals	Two Terminals	Line Configuration
3203A	Send Prolong.	0.00 .. 30.00 sec	0.05 sec	Time for send signal prolongation
3207A	Delay for alarm	0.00 .. 30.00 sec	10.00 sec	Unblocking: Time Delay for Alarm
3208	Release Delay	0.000 .. 30.000 sec	0.000 sec	Time Delay for release after pickup
3209A	TrBlk Wait Time	0.00 .. 30.00 sec; ∞	0.04 sec	Transient Block.: Duration external flt.
3210A	TrBlk BlockTime	0.00 .. 30.00 sec	0.05 sec	Transient Block.: Blk.T. after ext. flt.
3212A	EF TRANSBLK DIS	YES NO	YES	EF transient block by DIS

2.8.9 Information List

No.	Information	Type of Information	Comments
1311	>EF Teleprot.ON	SP	>E/F Teleprotection ON
1312	>EF TeleprotOFF	SP	>E/F Teleprotection OFF
1313	>EF TeleprotBLK	SP	>E/F Teleprotection BLOCK
1318	>EF Rec.Ch1	SP	>E/F Carrier RECEPTION, Channel 1
1319	>EF Rec.Ch2	SP	>E/F Carrier RECEPTION, Channel 2
1320	>EF UB ub 1	SP	>E/F Unblocking: UNBLOCK, Channel 1
1321	>EF UB bl 1	SP	>E/F Unblocking: BLOCK, Channel 1
1322	>EF UB ub 2	SP	>E/F Unblocking: UNBLOCK, Channel 2
1323	>EF UB bl 2	SP	>E/F Unblocking: BLOCK, Channel 2
1324	>EF BlkEcho	SP	>E/F BLOCK Echo Signal
1325	>EF Rec.Ch1 L1	SP	>E/F Carrier RECEPTION, Channel 1, Ph.L1
1326	>EF Rec.Ch1 L2	SP	>E/F Carrier RECEPTION, Channel 1, Ph.L2
1327	>EF Rec.Ch1 L3	SP	>E/F Carrier RECEPTION, Channel 1, Ph.L3
1328	>EF UB ub 1-L1	SP	>E/F Unblocking: UNBLOCK Chan. 1, Ph.L1
1329	>EF UB ub 1-L2	SP	>E/F Unblocking: UNBLOCK Chan. 1, Ph.L2
1330	>EF UB ub 1-L3	SP	>E/F Unblocking: UNBLOCK Chan. 1, Ph.L3
1371	EF Tele SEND L1	OUT	E/F Telep. Carrier SEND signal, Phase L1
1372	EF Tele SEND L2	OUT	E/F Telep. Carrier SEND signal, Phase L2
1373	EF Tele SEND L3	OUT	E/F Telep. Carrier SEND signal, Phase L3
1374	EF Tele STOP L1	OUT	E/F Telep. Block: carrier STOP signal L1
1375	EF Tele STOP L2	OUT	E/F Telep. Block: carrier STOP signal L2
1376	EF Tele STOP L3	OUT	E/F Telep. Block: carrier STOP signal L3
1380	EF TeleON/offBI	IntSP	E/F Teleprot. ON/OFF via BI
1381	EF Telep. OFF	OUT	E/F Teleprotection is switched OFF
1384	EF Tele SEND	OUT	E/F Telep. Carrier SEND signal
1386	EF TeleTransBlk	OUT	E/F Telep. Transient Blocking
1387	EF TeleUB Fail1	OUT	E/F Telep. Unblocking: FAILURE Channel 1
1388	EF TeleUB Fail2	OUT	E/F Telep. Unblocking: FAILURE Channel 2
1389	EF Tele BL STOP	OUT	E/F Telep. Blocking: carrier STOP signal
1390	EF Tele BL Jump	OUT	E/F Tele.Blocking: Send signal with jump
1391	EF Rec.L1 Dev1	OUT	EF Tele.Carrier RECEPTION, L1, Device1
1392	EF Rec.L2 Dev1	OUT	EF Tele.Carrier RECEPTION, L2, Device1
1393	EF Rec.L3 Dev1	OUT	EF Tele.Carrier RECEPTION, L3, Device1
1394	EF Rec.L1 Dev2	OUT	EF Tele.Carrier RECEPTION, L1, Device2
1395	EF Rec.L2 Dev2	OUT	EF Tele.Carrier RECEPTION, L2, Device2
1396	EF Rec.L3 Dev2	OUT	EF Tele.Carrier RECEPTION, L3, Device2
1397	EF Rec.L1 Dev3	OUT	EF Tele.Carrier RECEPTION, L1, Device3
1398	EF Rec.L2 Dev3	OUT	EF Tele.Carrier RECEPTION, L2, Device3
1399	EF Rec.L3 Dev3	OUT	EF Tele.Carrier RECEPTION, L3, Device3

2.9 Measures for Weak and Zero Infeed

In cases where there is no or only weak infeed present at one line end, the distance protection does not pick up there during a short-circuit on the line. On lines where there is only a single-sided infeed, a pickup by the distance protection is only possible at the infeed end. On lines where the starpoint is only earthed behind one line end, there is also no pickup at the line without zero sequence current. The missing pickup means that the release signal for the remote end cannot be created. The settings and information table applies for the following functions.

2.9.1 Echo function

2.9.1.1 Functional Description

Figure 2-98 shows the method of operation of the echo function. The echo function can be activated (*ECHO only*) or deactivated (*OFF*) under address 2501 FCT Weak Infeed (weak infeed FunCTion). You can also activate the weak infeed tripping function (*ECHO and TRIP* and *Echo &Trip(I=0)*) with this „switch“. Refer also to Section 2.9.2. This setting is common to the teleprotection functions for the distance protection and for the earth fault protection.

If there is no fault detection or no earth current at one line end, the echo function causes the received signal to be sent back to the other line end as an „echo“, where it is used to initiate permissive tripping.

In applications with one common transmission channel used by both the distance and the earth fault protection spurious trippings may occur, if distance protection and earth fault protection create an echo independently from each other. In this case parameter **Echo:1channel** has to be set to ***YES***.

If the conditions for an echo signal are met by the distance protection or the earth fault protection (see also Sections 2.6 and 2.8 under „Echo Function“), a short delay **Trip/Echo DELAY** is initially activated. This delay is necessary to avoid transmission of the echo if the protection at the weak line end has a longer fault detection time during reverse faults or if it picks up a little later due to unfavourable short-circuit or earth current distribution. If, however, the circuit breaker at the non-feeding line end is open, this delay of the echo signal is not required. The echo delay time may then be bypassed. The circuit breaker position is provided by the central information control functions (refer to Section 2.20.1).

The echo impulse is then transmitted (alarm output „ECHO SIGNAL“), the duration of which can be set with the parameter **Trip EXTENSION**. The „ECHO SIGNAL“ must be allocated separately to the output relay(s) for transmission, as it is not contained in the transmit signals „Dis.T.SEND“, „Dis.T.SEND L*“ or „EF Tele SEND“.

Note

The „ECHO SIGNAL“ (No. 4246) must be separately allocated to the output relay to start the send signal via the transmitter actuation. It is not included in the transmit signals of the transmission functions. On the digital protection data interface with permissive overreach transfer trip mode, the echo is transmitted as a separate signal without taking any special measures.

After output of the echo pulse or during the send signal of the distance protection or the earth fault protection, a new echo cannot be sent for at least 50 ms (presetting). This prevents echo repetition after the line has been switched off.

In the case of the blocking scheme and the underreach schemes, the echo function is not required and therefore ineffective.

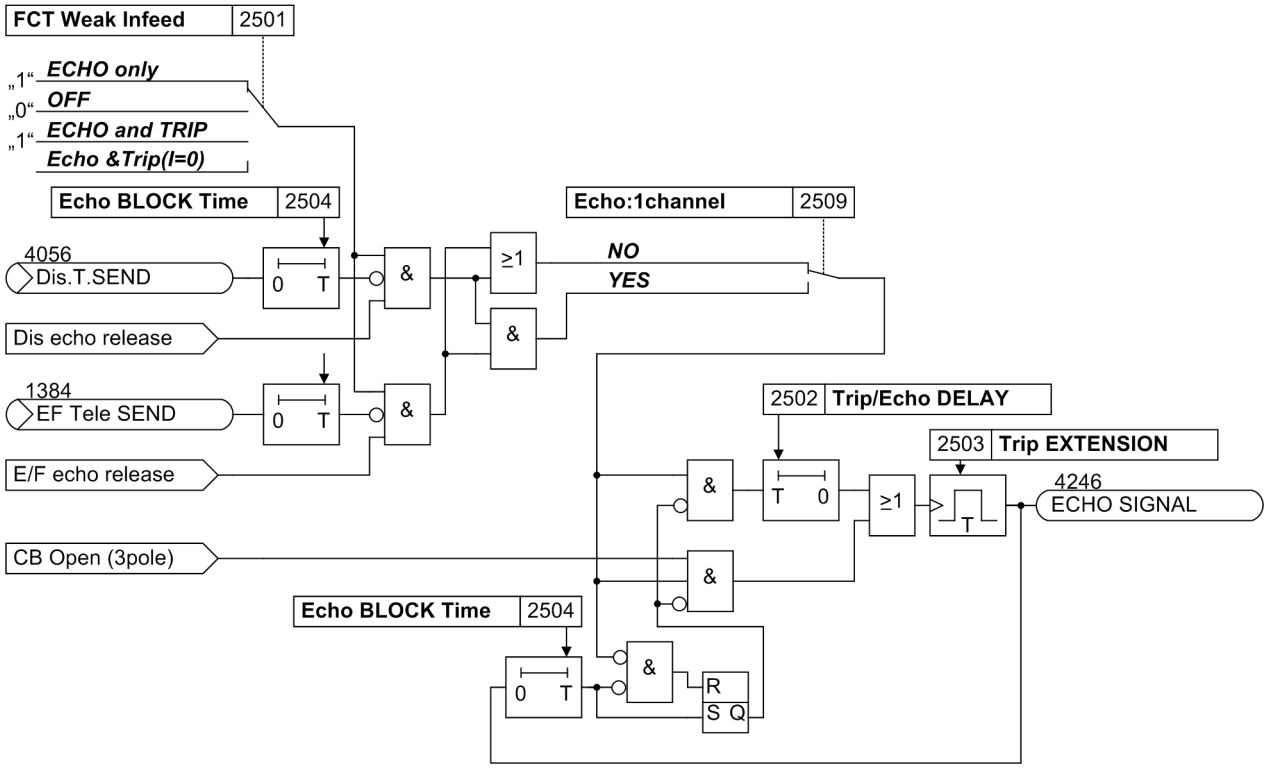

Figure 2-98 Logic diagram of the echo function with teleprotection

2.9.2 Classical Tripping

2.9.2.1 Method of Operation

Teleprotection schemes

By coordinating the weak infeed function with the teleprotection in conjunction with distance protection and/or earth fault protection, fast tripping can also be achieved at both line ends in the above cases.

At the strong infeed line end, the distance protection can always trip instantaneously for faults inside zone Z1. With permissive teleprotection schemes, fast tripping for faults on 100% of the line length is achieved by activation of the echo function (see section 2.6).This provides the permissive release of the trip signal at the strong infeed line end.

The permissive teleprotection scheme in conjunction with the earth fault protection can also achieve release of the trip signal at the strong infeed line end by means of the echo function (refer to Section 2.8).

In many cases tripping of the circuit breaker at the weak infeeding line end is also desired. For this purpose the device 7SA522 has a dedicated protection function with dedicated trip command.

Pickup with undervoltage

In Figure 2-99, the logic diagram of the weak-infeed tripping is shown. The function can be activated (***ECHO and TRIP*** and ***Echo &Trip(I=0)***) or deactivated (***OFF***) in address 2501 **FCT Weak Infeed** (Weak Infeed FunCTion). If this „switch“ is set to ***ECHO only***, the tripping is also disabled; however, the echo function to release the infeeding line end is activated (refer also to Section 2.6 and 2.8). The tripping function can be blocked at any time via the binary input „>BLOCK Weak Inf“.

The logic for the detection of a weak-infeed condition is built up per phase in conjunction with the distance protection and additionally once for the earth fault protection. Since the undervoltage check is performed for each phase, single-pole tripping is also possible, provided the device version has the single-pole tripping option.

In the event of a short-circuit, it may be assumed that only a small voltage appears at the line end with the weak-infeed condition, as the small fault current only produces a small voltage drop in the short-circuit loop. In the event of zero-infeed, the loop voltage is approximately zero. The weak-infeed tripping is therefore dependent on the measured undervoltage **UNDERVOLTAGE** which is also used for the selection of the faulty phase.

If a signal is received from the opposite line end without fault detection by the local protection, this indicates that there is a fault on the protected feeder. In the case of three terminal lines when using a comparison scheme a receive signal from both ends may be present. In the case of underreach schemes one receive signal from at least one end is sufficient.

After a security margin time of 40°ms following reception of the receive signal, the weak-infeed tripping is released if the remaining conditions are satisfied: undervoltage, circuit breaker closed and no pickup of the distance protection or of the earth fault protection.

To avoid a faulty pickup of the weak infeed function following tripping of the line and reset of the fault detection, the function cannot pick up anymore once a fault detection in the affected phase was present (RS flip-flop in Figure).

In the case of the earth fault protection, the release signal is routed via the phase segregated logic modules. Single-phase tripping is therefore also possible if both distance protection and earth fault protection or exclusively earth fault protection issues a release condition.

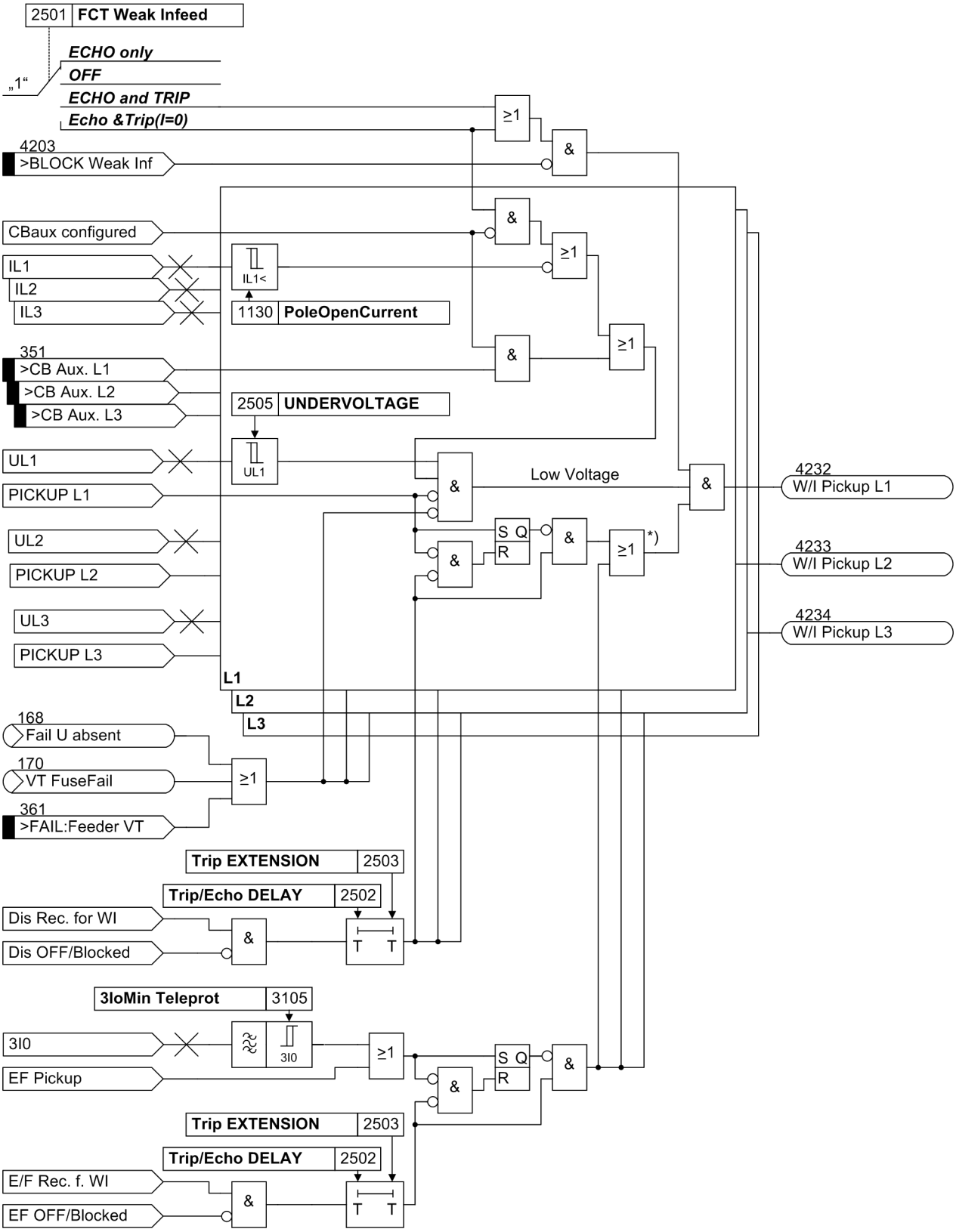

Figure 2-99 Logic diagram of the weak infeed tripping

*) Where the distance protection and the earth fault protection function share the same transmission channel (address 2509 = ***YES***) and neither the distance protection nor the earth fault protection are blocked, the output of this gate is an AND combination of the inputs.

2.9.2.2 Setting Notes

General

It is a prerequisite for the operation of the weak infeed function that this function is enabled during the configuration of the device at address 125 **Weak Infeed** = ***Enabled***.

With the parameter **FCT Weak Infeed** (address 2501), it is determined whether the device shall trip during a weak infeed condition or not. With the settings ***ECHO and TRIP*** and ***Echo &Trip(I=0)***, both the echo function and the weak infeed tripping function are activated. With the setting ***ECHO only***, the echo function for provision of the release signal at the infeeding line end is activated. There is, however, no tripping at the line end with missing or weak infeed condition. As the weak-infeed measures are dependent on the signal reception from the opposite line end, they only make sense if the protection is coordinated with teleprotection (refer to Section 2.6 and/or 2.8).

The receive signal is a functional component of the trip condition. Accordingly, the weak infeed tripping function must **not be used with the blocking schemes**. It is only permissible with the permissive schemes and the comparison schemes with release signals! In all other cases it should be switched ***OFF*** at address 2501. In such cases it is better to disable this function from the onset by setting address 125 to ***Disabled*** during the device configuration. The associated parameters are then not accessible.

The undervoltage setting value **UNDERVOLTAGE** (address 2505) must in any event be set below the minimum expected operational phase-earth voltage. The lower limit for this setting is given by the maximum expected voltage drop at the relay location on the weak-infeed side during a short-circuit on the protected feeder for which the distance protection may no longer pick up.

Echo Function

In the case of line ends with weak infeed, the echo function is sensible in conjunction with permissive overreach transfer schemes so that the feeding line end is also released. The parameters for weak infeed are listed in Section 2.9.3.2. The echo function can be enabled (***ECHO only***) or disabled (***OFF***) at address 2501 **FCT Weak Infeed**. By means of this „switch“ the weak infeed tripping function can also be activated (***ECHO and TRIP***and ***Echo &Trip(I=0)***).

Please do not fail to observe the notes on the setting of the distance protection stages at margin heading „Distance Protection Prerequisites“ in Section 2.6, and the notes on earth fault protection regarding the setting of the earth current stage **3IoMin Teleprot** at margin heading „Earth Fault Protection Prerequisites“ in Section 2.8.

If no circuit breaker auxiliary contacts are routed and if no current flow takes place, a tripping during weak infeed is only possible with the setting ***Echo &Trip(I=0)***. With this setting, the function is not blocked by checking the residual current. If the circuit breaker auxiliary contacts are routed, a tripping during weak infeed is further blocked if the auxiliary contacts signal that the circuit breaker is opened.

Tripping during weak infeed via ***ECHO and TRIP*** is only possible if either the circuit breaker auxiliary contacts signal that the circuit breaker is closed or current flows in the corresponding phase which exceeds the preset residual current (address 1130 **PoleOpenCurrent**).

The echo delay time **Trip/Echo DELAY** (address 2502) must be set long enough to avoid incorrect echo signals resulting from the difference in fault detection pick-up time of the distance protection functions or the earth fault protection function at all line ends during external faults (through-fault current). Typical setting is approx. 40 ms (presetting). This parameter can only be altered with DIGSI under **Additional Settings**.

The echo impulse duration **Trip EXTENSION** (address 2503) may be matched to the configuration data of the signal transmission equipment. It must be long enough to ensure that the receive signal is recognized even with different pickup times by the protection devices at the line ends and different response times of the transmission equipment. In most cases approx. 50ms (presetting) is sufficient. This parameter can only be altered with DIGSI under **Additional Settings**.

A continuous echo signal between the line ends can be avoided (e.g. spurious signal from the command channel) by blocking a new echo for a certain time **Echo BLOCK Time** (address 2504) after each output of an echo signal. Typical setting is approx. 50 ms. In addition, after the distance protection or earth fault protection signal was sent, the echo is also blocked for the time **Echo BLOCK Time**. This parameter can only be altered with DIGSI under **Additional Settings**.

In applications with a transmission channel used by both the distance and the earth fault protection spurious trippings may occur, if distance protection and earth fault protection create an echo independently from each other. In this case parameter **Echo:1channel** (address 2509) has to be set to ***YES***. The default setting is ***NO***.

Note

The „ECHO SIGNAL“ (No. 4246) must be allocated separately to the output relays for the transmitter actuation, as it is not contained in the transmit signals of the transmission functions. On the digital protection data interface with permissive overreach transfer trip mode, the echo is transmitted as a separate signal without taking any special measures.

2.9.3 Tripping According to French Specification

2.9.3.1 Method of Operation

An alternative for detecting weak infeed is only available in the models 7SA522*-**D**.

Pickup with Relative Voltage Jump

In addition to the classical function of weak infeed, the so called ***Logic no. 2*** (address 125) presents an alternative to the method used so far.

This function operates independently of the teleprotection scheme by using its own receive signal and it is able to trip with delay and without delay.

Non-delayed Tripping

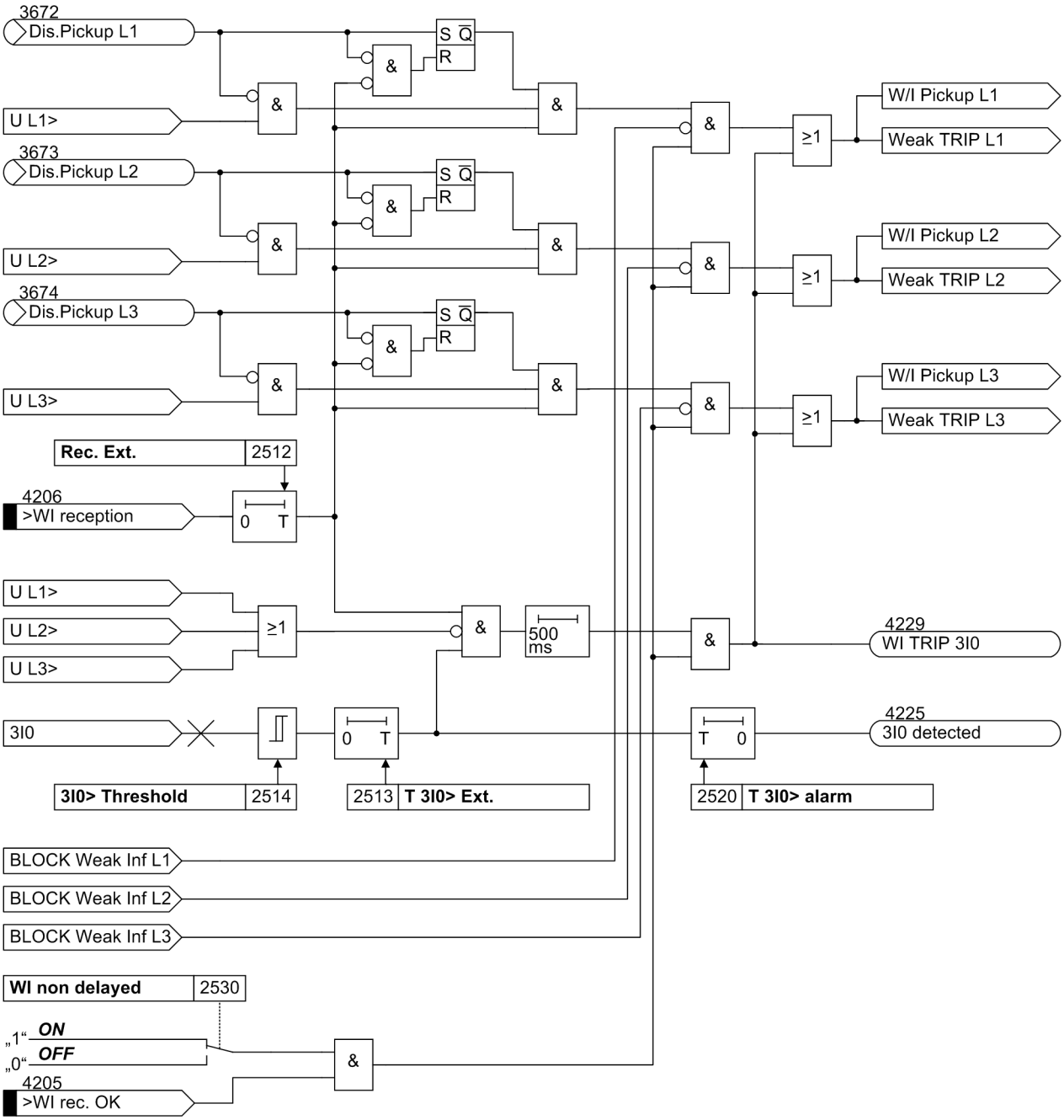

Figure 2-100 Logic diagram for non-delayed tripping

Trip with Delay

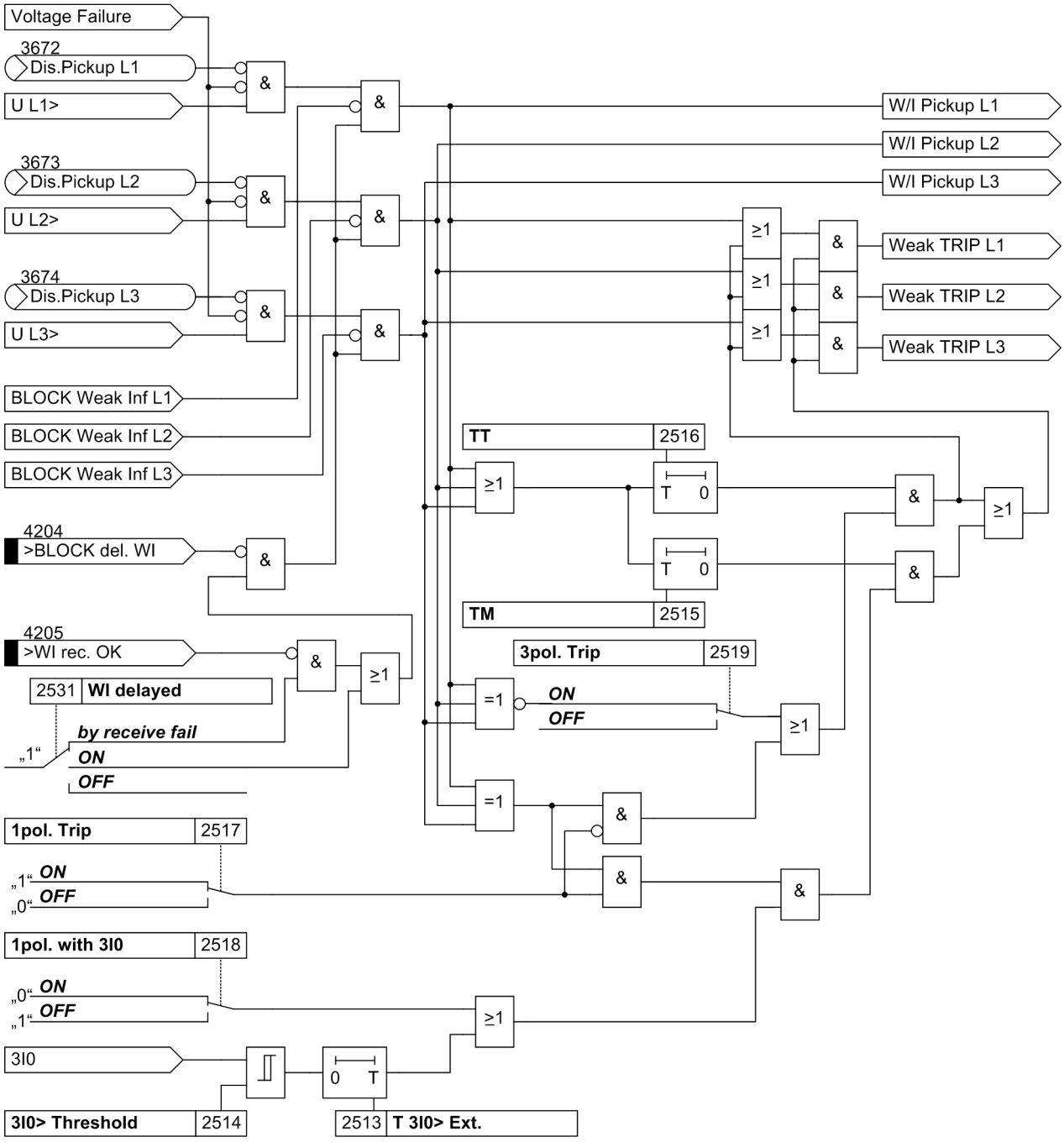

Figure 2-101 Logic for delayed tripping

2.9.3.2 Setting Notes

Phase selection

Phase selection is accomplished via undervoltage detection. For this purpose no absolute voltage threshold in volts is parameterized, but a factor (address 2510 **Uphe< Factor**) which is multiplied with the measured phase-phase voltage, and yields the voltage threshold. This method considers operational deviations from the rated voltage in the undervoltage threshold and adjusts them to the current conditions.

The undervoltage threshold is created from the mean value of the measured phase-to-phase voltages of the last 500 ms and delayed via a voltage memory. Thus changes of the phase-to-phase voltage affect the threshold only slowly. The time constant can be set at address 2511 **Time const.** τ. In case of pickup the last determined voltage threshold of the phase that has picked up remains until a trip command is issued. This ensures that an influence of the voltage threshold by the fault is avoided for long waiting times. The undervoltage is determined for all 3 phases.

If the measured phase-to-phase voltage falls below the threshold (address 1131 **PoleOpenVoltage**), undervoltage is no longer detected in this phase.

Since a positive feedback occurs during tripping, i. e. the measured fault status cannot be eliminated by switching off, the picked up element drops out after the WI tripping. When the current voltage exceeds the dropout threshold, a new pickup is possible after a maximum of 1 s.

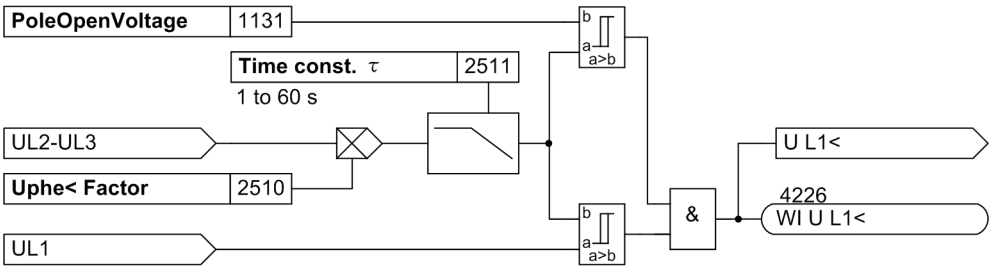

Figure 2-102 Undervoltage detection for U_{L1-E}

Instantaneous tripping

An undelayed TRIP command is issued if a receive signal „>WI reception“ is present and if an undervoltage is detected simultaneously. The receive signal is prolonged at address 2512 **Rec. Ext.** so that a trip command is still possible in the event of a quick dropout of the transmitting line end.

To prevent a faulty pickup of the weak infeed function following tripping of the line and reset of the fault detection by the distance protection function, a pickup is blocked in the corresponding phase. This blocking is maintained until the receive signal disappears.

If a receive signal applies and no undervoltage is detected, but the zero sequence current threshold **3I0> Threshold** is exceeded (address 2514), a fault on the line can be assumed. If this state (receive signal, no undervoltage and zero sequence current) applies for longer than 500 ms, 3-pole tripping is initiated. The time delay for the signal „3I0> exceeded“ is set at address 2513 **T 3I0> Ext.**. If the zero sequence current exceeds the threshold **3I0> Threshold** for longer than the set time **T 3I0> alarm** (address 2520), the annunciation „3I0 detected“ is issued.

The non-delayed stage operates only if binary input „>WI rec. OK“ reports the proper functioning of the transmission channel.

Moreover, the phase-selective block signals **BLOCK Weak Inf** affect the non-delayed logic. Faulty pickups are thus prevented, especially after the dedicated line end was shut down.

In address 2530 **WI non delayed** the stage for instantaneous tripping is switched ***OFF*** or ***ON*** permanently.

Trip with delay

The operation of the delayed tripping is determined by three parameters:

- Address 2517 **1pol. Trip** enables a single-pole trip command for phase-to-ground faults if it is parameterised to ***ON***
- Address 2518 **1pol. with 3IO**, if set to ***ON***, allows a single-pole trip command only if also the threshold **3IO> Threshold** for the zero current has been exceeded. If the threshold **3IO> Threshold** is not exceeded, phase-to-ground faults do not cause a tripping. Position ***OFF*** allows a single-pole trip command even when **3IO> Threshold** is not exceeded. The time delay of „3I0> exceeded“ is set at address 2513 **T 3IO> Ext.**.
- Address 2519 **3pol. Trip**, if set to ***ON***, also allows a three-pole trip command in the event of a multi-pole pickup. In position ***OFF*** only the multi-pole pickup is reported but a three-pole trip command is not issued (only reporting). A 1-pole or 3-pole trip command for 1-pole pickup can still be issued.

A delayed tripping stage is implemented to allow tripping of the dedicated line end in case the transmission channel is faulted. When undervoltage conditions have been detected, this stage picks up in one or more phases and trips with delay after a configured time (address 2515 **TM** and address 2516 **TT**) depending on the set stage mode (address 2517 **1pol. Trip** and 2519 **3pol. Trip**). If no trip command is issued during a pickup after the times 2515 **TM** and 2516 **TT** have elapsed, the voltage memory is reset and the pickup is cancelled.

Address 2531 **WI delayed** allows to set delayed tripping as operating mode. With ***ON*** this stage is permanently active. With the setting ***by receive fail***, this stage will only be active when „>WI rec. OK“ is not true. With ***OFF*** this stage is permanently switched off.

To avoid erroneous pickup, phase selection via undervoltage is blocked entirely in the event of voltage failure (pickup of the fuse failure monitor or of the VT mcb). In addition, the relevant phases are blocked when the distance protection function is activated.

2.9.4 Tables on Classical Tripping and Tripping according to French Specification

2.9.4.1 Settings

Addresses which have an appended "A" can only be changed with DIGSI, under Additional Settings.

The table indicates region-specific presettings. Column C (configuration) indicates the corresponding secondary nominal current of the current transformer.

Addr.	Parameter	C	Setting Options	Default Setting	Comments
2501	FCT Weak Infeed		OFF ECHO only ECHO and TRIP Echo &Trip(I=0)	ECHO only	Weak Infeed function
2502A	Trip/Echo DELAY		0.00 .. 30.00 sec	0.04 sec	Trip / Echo Delay after carrier receipt
2503A	Trip EXTENSION		0.00 .. 30.00 sec	0.05 sec	Trip Extension / Echo Impulse time
2504A	Echo BLOCK Time		0.00 .. 30.00 sec	0.05 sec	Echo Block Time
2505	UNDERVOLTAGE		2 .. 70 V	25 V	Undervoltage (ph-e)
2509	Echo:1channel		NO YES	NO	Echo logic: Dis and EF on common channel
2510	Uphe< Factor		0.10 .. 1.00	0.70	Factor for undervoltage Uphe<
2511	Time const. τ		1 .. 60 sec	5 sec	Time constant Tau
2512A	Rec. Ext.		0.00 .. 30.00 sec	0.65 sec	Reception extension
2513A	T 3I0> Ext.		0.00 .. 30.00 sec	0.60 sec	3I0> exceeded extension
2514	3I0> Threshold	1A	0.05 .. 1.00 A	0.50 A	3I0 threshold for neutral current pickup
		5A	0.25 .. 5.00 A	2.50 A	
2515	TM		0.00 .. 30.00 sec	0.40 sec	WI delay single pole
2516	TT		0.00 .. 30.00 sec	1.00 sec	WI delay multi pole
2517	1pol. Trip		ON OFF	ON	Single pole WI trip allowed
2518	1pol. with 3I0		ON OFF	ON	Single pole WI trip with 3I0
2519	3pol. Trip		ON OFF	ON	Three pole WI trip allowed
2520	T 3I0> alarm		0.00 .. 30.00 sec	10.00 sec	3I0> exceeded delay for alarm
2530	WI non delayed		ON OFF	ON	WI non delayed
2531	WI delayed		ON by receive fail OFF	by receive fail	WI delayed

2.9.4.2 Information List

No.	Information	Type of Information	Comments
4203	>BLOCK Weak Inf	SP	>BLOCK Weak Infeed
4204	>BLOCK del. WI	SP	>BLOCK delayed Weak Infeed stage
4205	>WI rec. OK	SP	>Reception (channel) for Weak Infeed OK
4206	>WI reception	SP	>Receive signal for Weak Infeed
4221	WeakInf. OFF	OUT	Weak Infeed is switched OFF
4222	Weak Inf. BLOCK	OUT	Weak Infeed is BLOCKED
4223	Weak Inf ACTIVE	OUT	Weak Infeed is ACTIVE
4225	3I0 detected	OUT	Weak Infeed Zero seq. current detected
4226	WI U L1<	OUT	Weak Infeed Undervoltg. L1
4227	WI U L2<	OUT	Weak Infeed Undervoltg. L2
4228	WI U L3<	OUT	Weak Infeed Undervoltg. L3
4229	WI TRIP 3I0	OUT	WI TRIP with zero sequence current
4231	WeakInf. PICKUP	OUT	Weak Infeed PICKED UP
4232	W/I Pickup L1	OUT	Weak Infeed PICKUP L1
4233	W/I Pickup L2	OUT	Weak Infeed PICKUP L2
4234	W/I Pickup L3	OUT	Weak Infeed PICKUP L3
4241	WeakInfeed TRIP	OUT	Weak Infeed General TRIP command
4242	Weak TRIP 1p.L1	OUT	Weak Infeed TRIP command - Only L1
4243	Weak TRIP 1p.L2	OUT	Weak Infeed TRIP command - Only L2
4244	Weak TRIP 1p.L3	OUT	Weak Infeed TRIP command - Only L3
4245	Weak TRIP L123	OUT	Weak Infeed TRIP command L123
4246	ECHO SIGNAL	OUT	ECHO Send SIGNAL

2.10 External direct and remote tripping

Any signal from an external protection or monitoring device can be coupled into the signal processing of the 7SA522 by means of a binary input. This signal can be delayed, alarmed and routed to one or several output relays.

2.10.1 Method of Operation

External trip of the local circuit breaker

Figure 2-103 shows the logic diagram. If device and circuit breaker are capable of single-phase operation, it is also possible to trip single-pole. The tripping logic of the device ensures that the conditions for single-pole tripping are met (e.g. single-phase tripping permissible, automatic reclosure ready).

The external tripping can be switched on and off with a setting parameter and may be blocked via binary input.

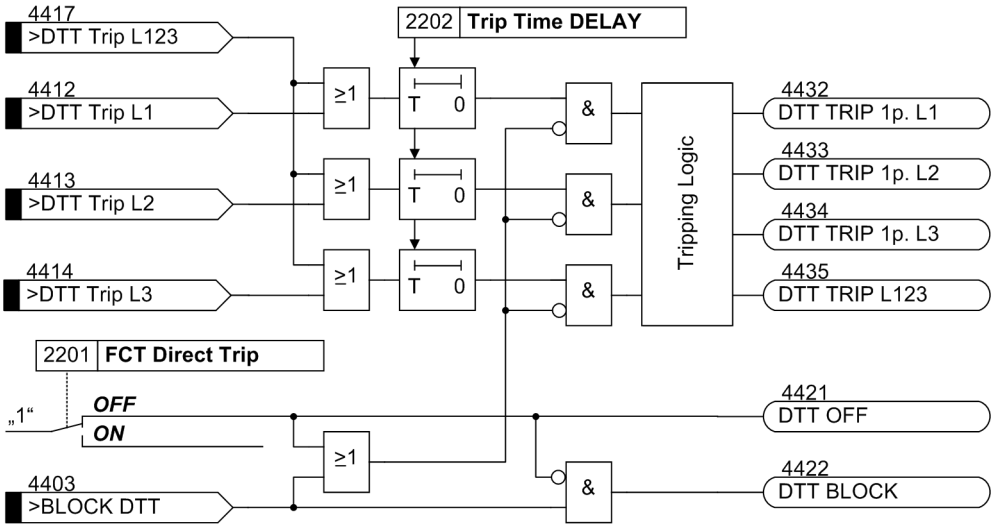

Figure 2-103 Logic diagram of the local external tripping

Remote trip of the circuit breaker at the opposite line end

On a digital communication link via protection interface, transmission of up to 4 remote commands is possible, as described in Section 2.5.

On conventional transmission paths, one transmission channel per desired transmission direction is required for remote tripping at the remote end. For example, fibre optic connections or voice frequency modulated high frequency channels via pilot cables, power line carrier or microwave radio links can be used for this purpose in the following ways.

If the trip command of the distance protection is to be transmitted, it is best to use the integrated teleprotection function for the transmission of the signal as this already incorporates the optional extension of the transmitted signal, as described in Section 2.6. Any of the commands can of course be used to trigger the transmitter to initiate the send signal.

On the receiver side, the external local trip function is used. The receive signal is routed to a binary input which is assigned to the logical binary input function „>DTT Trip L123“. If single-pole tripping is desired, you can also use binary inputs „>DTT Trip L1“, „>DTT Trip L2“ and „>DTT Trip L3“. Figure 2-103 thus also applies in this case.

2.10.2 Setting Notes

General

A prerequisite for the application of the direct and remote tripping functions is that during the configuration of the scope of functions in address 122 **DTT Direct Trip** = ***Enabled*** was applied. At address 2201 **FCT Direct Trip** it can also be switched ***ON*** or ***OFF***.

It is possible to set a trip delay for both the local external trip and the receive side of the remote trip in address 2202 **Trip Time DELAY**. This can be used as a security time margin, especially in the case of local trip.

Once a trip command has been issued, it is maintained for at least as long as the set minimum trip command duration **TMin TRIP CMD** which was set for the device in general in address 240 (Section 2.1.2). Reliable operation of the circuit breaker is therefore ensured, even if the initiating signal pulse is very short. This parameter can only be altered in DIGSI at **Additional Settings**.

2.10.3 Settings

Addr.	Parameter	Setting Options	Default Setting	Comments
2201	FCT Direct Trip	ON OFF	OFF	Direct Transfer Trip (DTT)
2202	Trip Time DELAY	0.00 .. 30.00 sec; ∞	0.01 sec	Trip Time Delay

2.10.4 Information List

No.	Information	Type of Information	Comments
4403	>BLOCK DTT	SP	>BLOCK Direct Transfer Trip function
4412	>DTT Trip L1	SP	>Direct Transfer Trip INPUT Phase L1
4413	>DTT Trip L2	SP	>Direct Transfer Trip INPUT Phase L2
4414	>DTT Trip L3	SP	>Direct Transfer Trip INPUT Phase L3
4417	>DTT Trip L123	SP	>Direct Transfer Trip INPUT 3ph L123
4421	DTT OFF	OUT	Direct Transfer Trip is switched OFF
4422	DTT BLOCK	OUT	Direct Transfer Trip is BLOCKED
4432	DTT TRIP 1p. L1	OUT	DTT TRIP command - Only L1
4433	DTT TRIP 1p. L2	OUT	DTT TRIP command - Only L2
4434	DTT TRIP 1p. L3	OUT	DTT TRIP command - Only L3
4435	DTT TRIP L123	OUT	DTT TRIP command L123

2.11 Overcurrent protection (optional)

The 7SA522 features a time overcurrent protection function which can be used as either a back-up or an emergency overcurrent protection. All stages may be configured independently of each other and combined according to the user's requirements.

2.11.1 General

Whereas the distance protection can only function correctly if the measured voltage signals are available to the device, the emergency overcurrent protection only requires the currents. The emergency overcurrent function is automatically activated when the measured voltage signal is lost, e.g. due to a short circuit or interruption of the voltage transformer secondary circuits (emergency operation). The emergency operation therefore replaces the distance protection as short circuit protection if loss of the measured voltage signal is recognized by one of the following conditions:

- Pickup of the internal measured voltage monitoring („Fuse–Failure–Monitor“, refer to Subsection 2.19.1) or
- The „Voltage transformer mcb tripped“ signal is received via binary input, indicating that the measured voltage signal is lost.

If one of these conditions occur, the distance protection is immediately blocked and the emergency operation is activated.

If the overcurrent protection is set as a back-up overcurrent protection, it will work independently of other protection and monitoring functions, i.e. also independently of the distance protection. The back-up overcurrent protection could for instance be used as the only short-circuit protection if the voltage transformers are not yet available when the feeder is initially commissioned.

The overcurent protection has a total of four stages for each phase current and four stages for the earth current, these are:

- Two overcurrent stages with a definite time characteristic (O/C with DT),
- One overcurrent stage with inverse time characteristic (IDMT),
- One additional overcurrent stage which is preferably used as a stub protection, but which can be applied as an additional normal definite time delayed stage. With the device variants for the region Germany (10th digit of ordering code = A) this stage is only available if the setting 126 ***TOC IEC /w 3ST*** is active.

These four stages are independent from each other and are freely combinable. Blocking by external criteria via binary input is possible as well as rapid (non-delayed) tripping (e.g. by an external automatic reclose device). During energization of the protected feeder onto a dead fault it is also possible to release any stage, or also several, for non-delayed tripping. If you do not need all stages, each individual stage can be deactivated by setting the pickup threshold to ∞.

2.11.2 Method of Operation

Measured values

The phase currents are fed to the device via the input transformers of the measuring input. Earth current $3 \cdot I_0$ is either measured directly or calculated depending on the ordered device version and usage of the fourth current input I_4 of the device.

If I_4 is connected to the starpoint of the current transformer set, the earth current will be available directly as measured quantity.

If the device is fitted with the highly sensitive current input for I_4, this current I_4 is used with the factor **I4/Iph CT** (address 221, refer to Section 2.1.2 of the **P.System Data 1**). As the linear range of this measuring input is restricted considerably in the high range, this current is only evaluated up to an amplitude of approx. 1.6°A. In the event of larger currents, the device automatically switches over to the evaluation of the zero sequence current derived from the phase currents. Naturally, all three phase currents obtained from a set of three star-connected current transformers must be available and connected to the device. The processing of the earth current is then also possible if very small as well as large earth fault currents occur.

If the fourth current input I_4 is used e.g. for a power transformer star point current or for the earth current of a parallel line, the device derives the earth current from the phase currents. Naturally in this case also all three phase currents derived from a set of three star connected current transformers must be available and connected to the device.

Definite time high set current stage I>>

Each phase current is compared with the setting value **Iph>>** (address 2610) after numerical filtering; the earth current is compared with **3IO>> PICKUP** (address 2612). After pickup of a stage and expiry of the associated time delays **T Iph>>** (address 2611) or **T 3IO>>** (address 2613) a trip command is issued. The dropout value is approximately 5% below the pickup value, but at least 1.5% of the nominal current, below the pickup value.

The figure below shows the logic diagram of the I>> stages. The stages can be blocked via a binary input „>BLOCK O/C I>>“. Binary inputs „>O/C InstTRIP“ and the function block „switch-onto-fault“ are common to all stages and described below. They may, however, separately affect the phase and/or earth current stages. This is accomplished with the following setting parameters:

- **I>> Telep/BI** (address 2614)determines whether a non-delayed trip of this stage via binary input „>O/C InstTRIP“ is possible (***YES***) or impossible (***NO***) and
- **I>> SOTF** (address 2615)determines whether during switching onto a fault tripping shall be instantaneous(***YES***) or not (***NO***) with this stage.

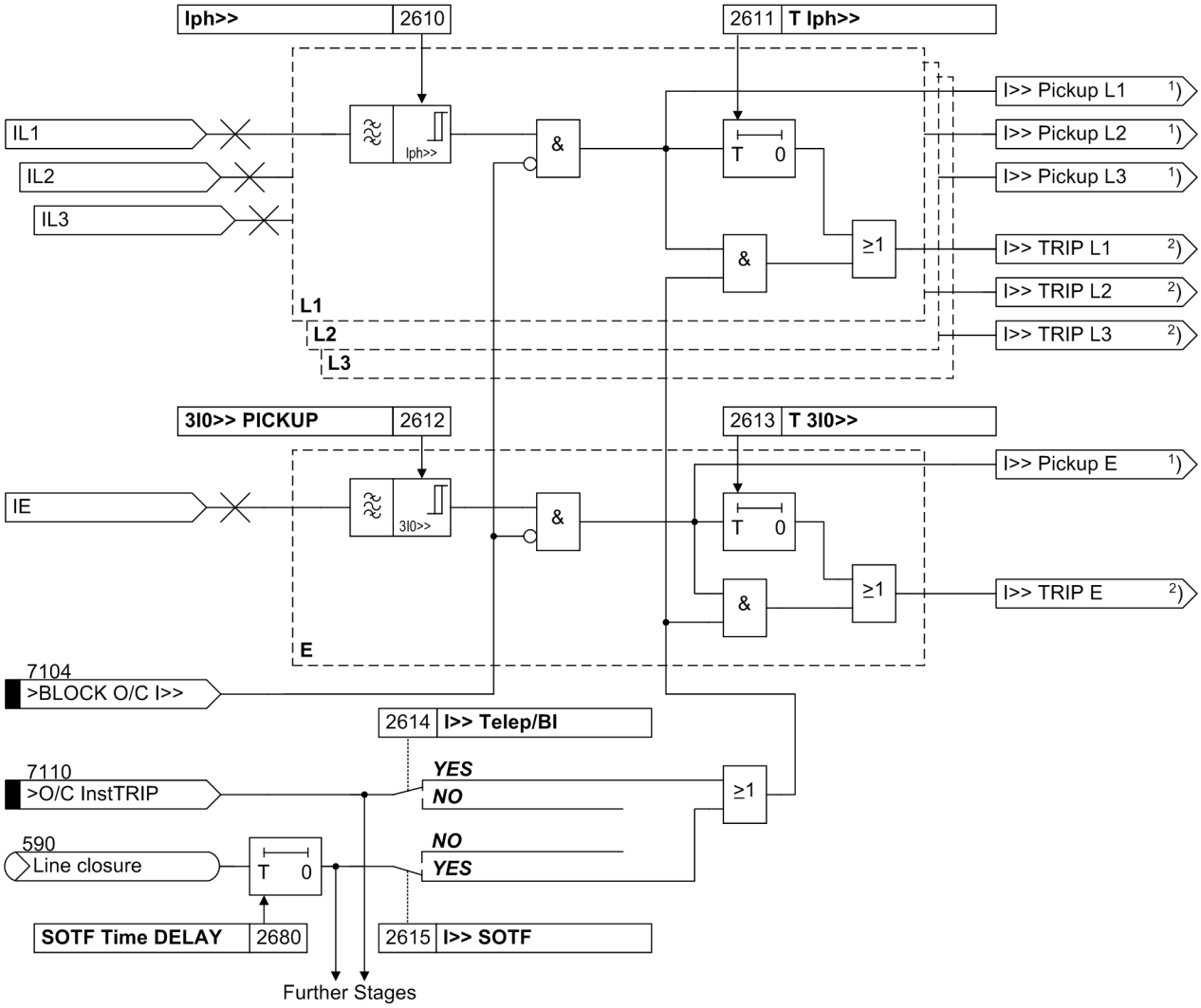

Figure 2-104 Logic diagram of the I>> stage

[1]) The output indications associated with the trip signals can be found in Table 2-5

[2]) The output indications associated with the trip signals can be found in Table 2-6

Definite time overcurrent stage I>

The logic of the overcurrent stage I is the same as that of the I>> stages. In all references **Iph>>** must merely be replaced with **Iph>** or **3I0>> PICKUP** with **3I0>**. In all other respects Figure 2-104 applies.

Inverse time overcurrent stage I_P

The logic of the inverse overcurrent stage also operates chiefly in the same way as the remaining stages. However, the time delay is calculated here based on the type of the set characteristic, the intensity of the current and a time multiplier (following figure). A pre-selection of the available characteristics was already carried out during the configuration of the protection functions. Furthermore, an additional constant time delay **T Ip Add** (address 2646) or **T 3I0p Add** (address 2656) may be selected, which is added to the inverse time. The possible characteristics are shown in the Technical Data.

The following figure shows the logic diagram. The setting addresses of the IEC characteristics are shown by way of an example. In the setting information (Subsection 2.11.3) the different setting addresses are elaborated upon.

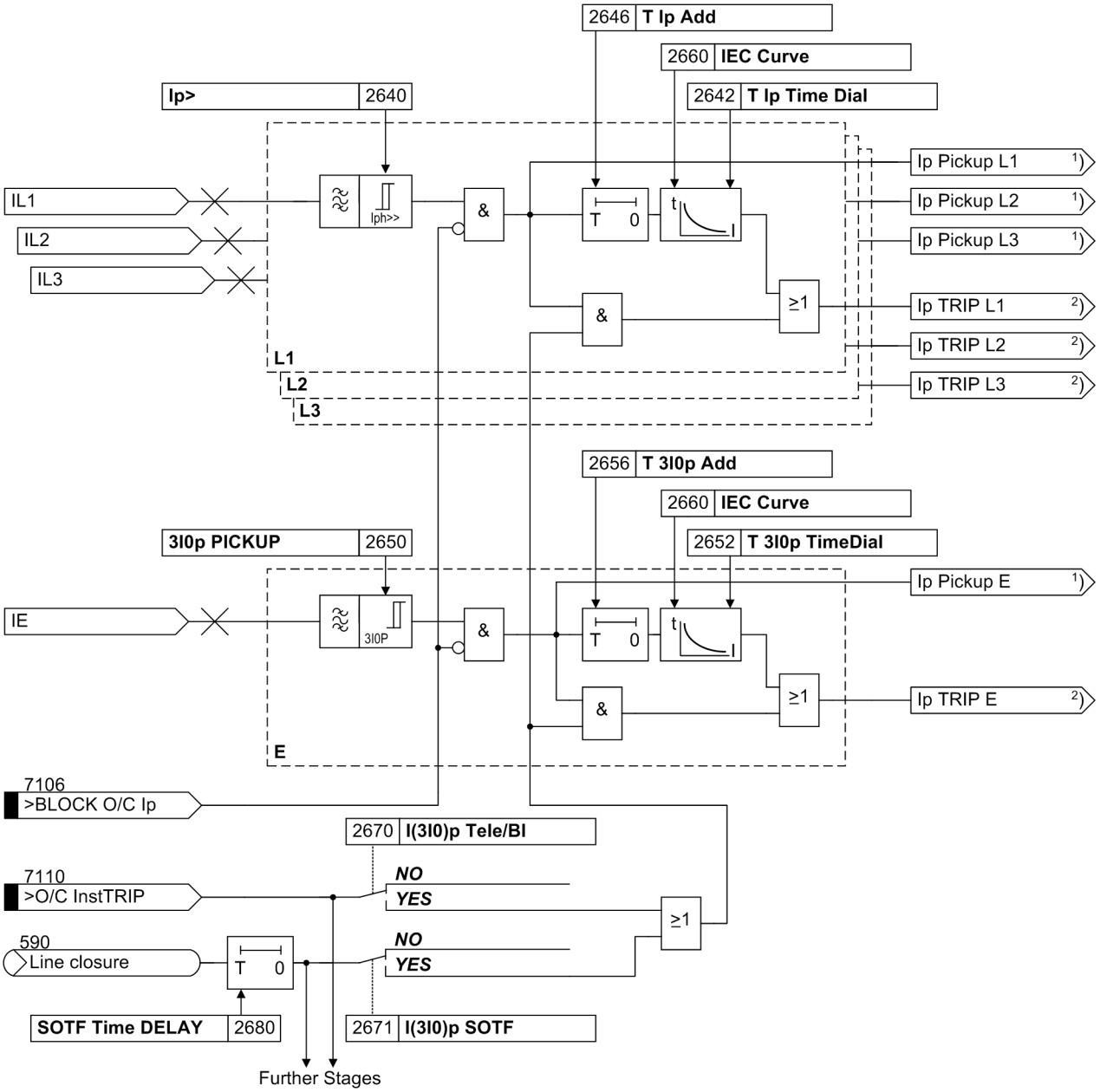

Figure 2-105 Logic diagram of the I_P stage (inverse time overcurrent protection), for example IEC characteristics

[1]) The output indications associated with the pickup signals can be found in Table 2-5

[2]) The output indications associated with the trip signals can be found in Table 2-6

End fault protection

A further overcurrent stage is the stub protection. It can, however, also be used as a normal additional definite time overcurrent stage, as it functions independently of the other stages.

A stub fault is a short-circuit located between the current transformer set and the line isolator. It is of particular importance with the $1^1/_2$ circuit breaker arrangements.

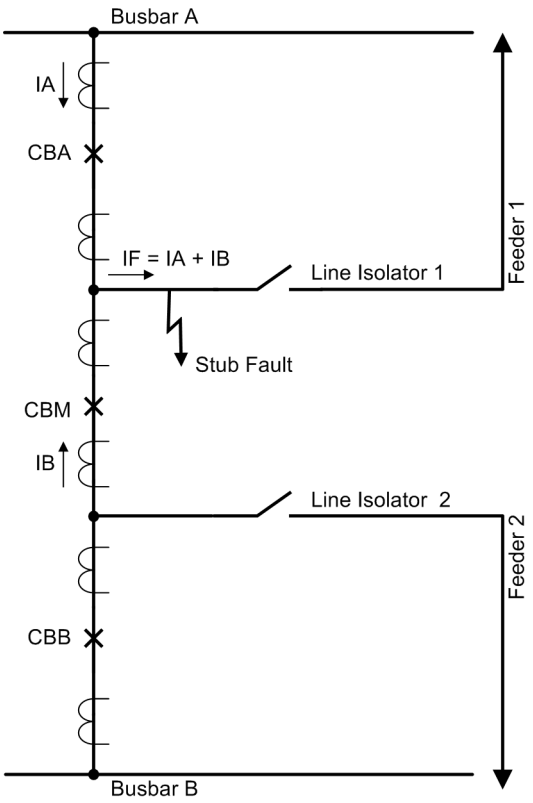

Figure 2-106 Stub fault at an $1^1/_2$ circuit breaker arrangement

If a short circuit current $\underline{I}_A$ and/or $\underline{I}_B$ flows while the line isolator 1 is open, this implies that a fault in the stub range between the current transformers $\underline{I}_A$, $\underline{I}_B$, and the line isolator exists. The circuit breakers CBA and CBC that carry the short-circuit current can be tripped without delay. The two sets of current transformers are connected in parallel such that the current sum $\underline{I}_A + \underline{I}_B$ represents the current flowing towards the line isolator.

The stub protection is an overcurrent protection which is only in service when the state of the line isolator indicates the open condition via a binary input „>I-STUB ENABLE“. The binary input must therefore be operated via an auxiliary contact of the isolator. In the case of a closed line isolator, the stub protection is out of service. For more information see the next logic diagram.

If the stub protection stage is to be used as a normal definite time overcurrent stage, the binary input „>BLOCK I-STUB“, should be left without allocation or routing (matrix). The enable input „>I-STUB ENABLE“, however, has to be constantly activated (either via a binary input or via integrated logic (CFC) functions which can be configured by the user.

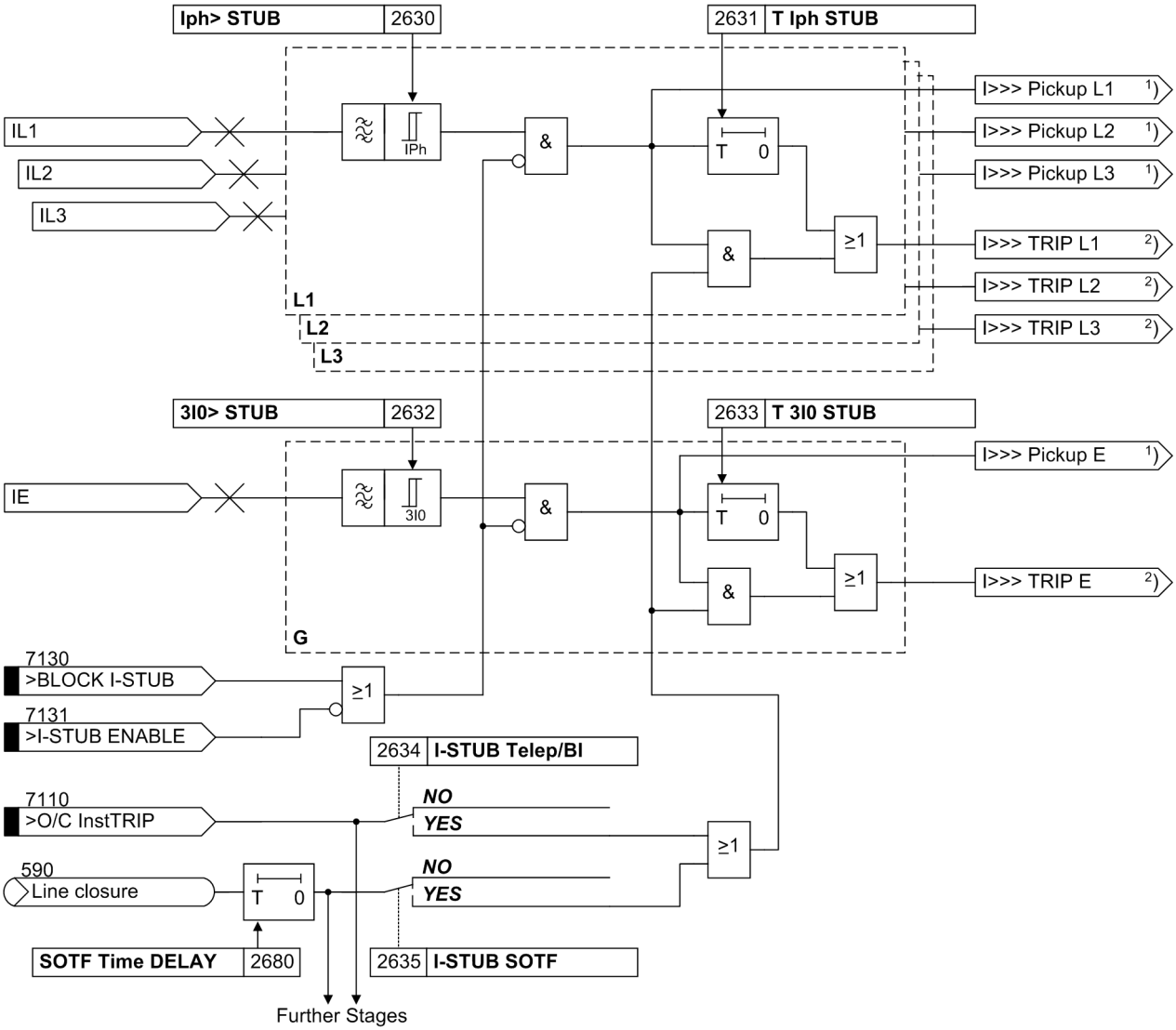

Figure 2-107 Logic diagram of stub fault protection

1) The output indications associated with the pickup signals can be found in Table 2-5

2) The output indications associated with the trip signals can be found in Table 2-6

Instantaneous tripping before automatic reclosure

If automatic reclosure is to be carried out, quick fault clearance before reclosure is usually desirable. A release signal from an external automatic reclosure device can be injected via binary input „>O/C InstTRIP“. The interconnection of the internal automatic reclose function is performed via an additional CFC logic, which typically connects the output signal 2889 „AR 1.CycZoneRel“ with the input signal „>O/C InstTRIP“. Any stage of the overcurrent protection can thus perform an instantaneous trip before reclosure via the parameter ***Telep*** / ***BI ...***.

Switching onto a fault

The internal line energization detection can be used to achieve quick tripping of the circuit breaker in the event of an earth fault. The time overcurrent protection can then trip three-pole without delay or with a reduced delay. It can be determined via parameter setting for which stage(s) the instantaneous tripping following energization applies (refer also to the logic diagrams Figure 2-104, 2-105 and 2-107). This function is independent of the high-current instantaneous tripping described in Section 2.12.

Pickup logic and tripping logic

The pickup signals of the individual phases (or the ground) and of the stages are linked in such a way that both the phase information and the stage which has picked up are output (Table 2-5).

Table 2-5 Pickup signals of the individual phases

Internal Annunciation	Figure	Output Annunciation	No
I>> PU L1 I> PU L1 Ip PU L1 I>>> PU L1	2-104 2-105 2-107	„O/C Pickup L1“	7162
I>> PU L2 I> PU L2 Ip PU L2 I>>> PU L2	2-104 2-105 2-107	„O/C Pickup L2“	7163
I>> PU L3 I> PU L3 Ip PU L3 I>>> PU L3	2-104 2-105 2-107	„O/C Pickup L3“	7164
I>> PU E I> PU E Ip PU E I>>> PU E	2-104 2-105 2-107	„O/C Pickup E“	7165
I>> PU L1 I>> PU L2 I>> PU L3 I>> PU E	2-104 2-104 2-104 2-104	„O/C PICKUP I>>“	7191
I> PU L1 I> PU L2 I> PU L3 I> PU E		„O/C PICKUP I>“	7192
Ip PU L1 Ip PU L2 Ip PU L3 Ip PU E	2-105 2-105 2-105 2-105	„O/C PICKUP Ip“	7193
I>>> PU L1 I>>> PU L2 I>>> PU L3 I>>> PU E	2-107 2-107 2-107 2-107	„I-STUB PICKUP“	7201
(All pickups)		„O/C PICKUP“	7161

For the tripping signals (table 2-6) the stage which caused the tripping is also output. If the device has the option to trip single-pole and if this option has been activated, the pole which has been tripped is also indicated in case of single-pole tripping (refer also to Section 2.20.1 „Tripping Logic of the Entire Device“).

Table 2-6 Trip signals of the single phases

Internal Indication	Display	Output Indication	No.
I>> TRIP L1 I> TRIP L1 Ip TRIP L1 I>>> TRIP L1	2-104 2-105 2-107	„O/C TRIP 1p.L1“ or „O/C TRIP L123“	7212 or 7215
I>> TRIP L2 I> TRIP L2 Ip TRIP L2 I>>> TRIP L2	2-104 2-105 2-107	„O/C TRIP 1p.L2“ or „O/C TRIP L123“	7213 or 7215
I>> TRIP L3 I> TRIP L3 Ip TRIP L3 I>>> TRIP L3	2-104 2-105 2-107	„O/C TRIP 1p.L3“ or „O/C TRIP L123“	7214 or 7215
I>> TRIP E I> TRIP E Ip TRIP E I>>> TRIP E	2-104 2-105 2-107	„O/C TRIP L123“	7215
I>> TRIP L1 I>> TRIP L2 I>> TRIP L3 I>> TRIP E	2-104 2-104 2-104 2-104	„O/C TRIP I>>“	7221
I> TRIP L1 I> TRIP L2 I> TRIP L3 I> TRIP E		„O/C TRIP I>“	7222
Ip TRIP L1 Ip TRIP L2 Ip TRIP L3 Ip TRIP E	2-105 2-105 2-105 2-105	„O/C TRIP Ip“	7223
I>>> TRIP L1 I>>> TRIP L2 I>>> TRIP L3 I>>> TRIP E	2-107 2-107 2-107 2-107	„I-STUB TRIP“	7235
(General TRIP)		„O/C TRIP“	7211

2.11.3 Setting Notes

General

During configuration of the scope of functions for the device (address 126) the available characteristics were determined. Depending on the configuration and the order variant, only those parameters that apply to the selected characteristics are accessible in the procedures described below.

Address 2601 is set according to the desired mode of operation of the overcurrent protection: **Operating Mode** = ***ON:always activ*** means that the overcurrent protection works independently of other protection functions, i.e. as a backup overcurrent protection. If it is to work only as an emergency function in case of loss of VT supply, ***ON:with VT loss*** must be set. Finally, it can also be set to ***OFF***.

If not all stages are required, each individual stage can be deactivated by setting the pickup threshold to ∞. But if you set only an associated time delay to ∞ this does not suppress the pickup signals but prevents the timers from running.

The stub protection remains in service even if the overcurrent mode of operation setting is ***ON:with VT loss***.

One or several stages can be set as instantaneous tripping stages when switching onto a fault. This is chosen during the setting of the individual stages (see below). To avoid a spurious pick-up due to transient overcurrents, the delay **SOTF Time DELAY** (address 2680) can be set. Typically, the presetting of **0** s is correct. A short delay can be useful in case of long cables for which high inrush currents can be expected, or for transformers. This delay depends on the intensity and the duration of the transient overcurrents as well as on which stages were selected for the fast switch onto fault clearance.

High Current Stages I_{ph}>>, $3I_0$>>

The I>> stages **Iph>>** (address2610) and **3IO>> PICKUP** (address2612) together with the I> stages or the I_p stages form a two-stage characteristic curve. Of course, all three stages can be combined as well. If one stage is not required, the pickup value has to be set to ∞. The I>> stages always operate with a defined delay time.

If the I>> stages are used for instantaneous tripping before the automatic reclosure (via CFC interconnection), the current setting corresponds to the I> or I_p stages (see below). In this case, only the different delay times are of interest. The times **T Iph>>**(address 2611) and **T 3IO>>** (address 2613) can then be set to **0** s or a very low value, as the fast clearance of the fault takes priority over the selectivity before the automatic reclosure is initiated. These stages have to be blocked before final trip in order to achieve the selectivity.

For very long lines with a small source impedance or on applications with large reactances (e.g. transformers, series reactors), the I>> stages can also be used for current grading. In this case, they must be set in such a way that they do not pick up in case of a fault at the end of the line. The times can then be set to **0** s or to a small value.

When using a personal computer and DIGSI to apply the settings, these can be optionally entered as primary or secondary values. For settings with secondary values the currents will be converted for the secondary side of the current transformers.

Calculation Example:

110 kV overhead line 150 mm^2:

s (length) = 60 km

R_1/s = 0.19 Ω/km

X_1/s = 0.42 Ω/km

Short-circuit power at the beginning of the line:

S_k' = 2.5 GVA

Current Transformer 600 A / 5 A

From that the line impedance Z_L and the source impedance Z_S are calculated:

$Z_1/s = \sqrt{0.19^2 + 0.42^2}\ \Omega/km = 0.46\ \Omega/km$

$Z_L = 0.46\ \Omega/km \cdot 60\ km = 27.66\ \Omega$

$$Z_S = \frac{(110\ kV)^2}{2500\ MVA} = 4.84\ \Omega$$

The three-phase fault current at the line end is $I_{sc\ end}$:

$$I_{F\ End} = \frac{1.1 \cdot U_N}{\sqrt{3} \cdot (Z_S + Z_L)} = \frac{1.1 \cdot 110\ kV}{\sqrt{3} \cdot (4.84\ \Omega + 27.66\ \Omega)} = 2150\ A$$

With a safety factor of 10 %, the following primary setting value is calculated:

Set value I>> = 1.1 · 2150 A = 2365 A

or the secondary setting value:

$$\text{Setting value } I>> = 1.1 \cdot \frac{2150\ \text{A}}{600\ \text{A}} \cdot 5\ \text{A} = 19.7\ \text{A}$$

i.e. in case of fault currents exceeding 2365 A (primary) or 19.7A (secondary) you can be sure that a short-circuit has occurred on the protected line. This fault can immediately be cleared by the time overcurrent protection.

Note: the calculation was carried out with absolute values, which is sufficiently precise for overhead lines. If the angles of the source impedance and the line impedance vary considerably, a complex calculation must be carried out.

A similar calculation must be carried out for earth faults, with the maximum earth current occurring at the line end during a short-circuit being decisive.

The set time delays are pure additional delays, which do not include the operating time (measuring time).

The parameter **I>> Telep/BI** (address 2614) defines whether the time delays **T Iph>>** (address 2611) and **T 3IO>>** (address 2613) can be bypassed via the binary input „>O/C InstTRIP“ (No. 7110) or by the operational automatic reclosure function. The binary input (if allocated) is applied to all stages of the time-overcurrent protection. With **I>> Telep/BI** = ***YES***, you define that the I>> stages trip without delay after pickup if the binary input was activated. For **I>> Telep/BI** = ***NO***, the set delays are always active.

If the I>> stage, when switching the line onto a fault, is to re-trip without delay or with a short delay, **SOTF Time DELAY** (address 2680, see above under margin heading „General“), the parameter **I>> SOTF** (address 2615) is set to ***YES***. Any other stage can be selected as well for this instantaneous tripping.

Overcurrent Stages I_{ph}>, $3I_0$> in Definite-time Overcurrent Protection

For the setting of the current pickup value, **Iph>** (address 2620), the maximum operating current is most decisive. Pickup due to overload should never occur, since the device in this operating mode operates as fault protection with correspondingly short tripping times and not as overload protection. For this reason, a pickup value of about 10 % above the expected peak load is recommended for line protection, and a setting of about 20 % above the expected peak load is recommended for transformers and motors.

When using a personal computer and DIGSI to apply the settings, these can be optionally entered as primary or secondary values. For settings with secondary values the currents will be converted for the secondary side of the current transformers.

Calculation Example:

110 kV overhead line 150 mm²

maximum transmittable power

P_{max}	= 120 MVA

corresponding to

I_{max}	= 630 A
Current Transformer	600 A / 5 A
Safety factor	1.1

With settings in primary quantities the following setting value is calculated:

Set value I> = 1.1 · 630 A = 693 A

With settings in secondary quantities the following setting value is calculated:

$$\text{Setting value I>} = 1.1 \cdot \frac{630\ \text{A}}{600\ \text{A}} \cdot 5\ \text{A} = 5.8\ \text{A}$$

The earth current stage **3IO>** (address 2622) should be set to detect the smallest earth fault current to be expected. For very small earth currents the earth fault protection is most suited (refer to Section 2.7).

The time delay **T Iph>** (address 2621) results from the time grading schedule designed for the network. If implemented as emergency overcurrent protection, shorter tripping times are advisable (one grading time step above the fast tripping stage), as this function is only activated in the case of the loss of the local measured voltage.

The time **T 3IO>** (address 2623) can normally be set shorter, according to a separate time grading schedule for earth currents.

The set times are mere additional delays for the independent stages, which do not include the inherent operating time of the protection. If only the phase currents are to be monitored, set the pickup value of the earth fault stage to ∞.

The parameter **I> Telep/BI** (address 2624) defines whether the time delays **T Iph>** (address 2621) and **T 3IO>** (address 2623) can be bypassed by the binary input „>O/C InstTRIP“. The binary input (if allocated) is applied to all stages of the time-overcurrent protection. With **I> Telep/BI** = ***YES*** you define that the I> stages trip without delay after pickup if the binary input was activated. For **I> Telep/BI** = ***NO*** the set delays are always active.

If the I> stage, when switching the line onto a fault, is to retrip without delay or with a short delay **SOTF Time DELAY** (address 2680, see above under side title „General“), set parameter **I> SOTF** (address 2625) to ***YES***. We recommend, however, not to choose the sensitive setting for the fast tripping as switching onto a fault typically causes a solid short circuit. It is important to avoid that the selected stage picks up due to transients during line energization.

Overcurrent Stages I_P, $3I_{0P}$ for Inverse-time Overcurrent Protection with IEC Characteristics

In the case of the inverse time overcurrent stages, various characteristics can be selected, depending on the ordering version of the device and the configuration (address 126). With IEC characteristics (address 126 **Back-Up O/C** = ***TOC IEC***) the following options are available in address 2660 **IEC Curve**:

Normal Inverse (inverse, type A according to IEC 60255-3),

Very Inverse (very inverse, type B according to IEC 60255-3),

Extremely Inv. (extremely inverse, type C according to IEC 60255-3), and

LongTimeInverse (longtime, type B according to IEC 60255-3).

For the setting of the current thresholds **Ip>** (address 2640) and **3IOp PICKUP** (address 2650) the same considerations as for the overcurrent stages of the definite time protection (see above) apply. In this case, it must be noted that a safety margin between the pickup threshold and the set value has already been incorporated. Pickup only occurs at a current which is approximately 10 % above the set value.

The above example shows that the maximum expected operating current may directly be applied as setting here.

Primary: Set value IP = 630 A,

Secondary: Set value IP = 5.25 A, i.e. (630 A/600 A) X 5 A.

The time multiplier setting **T Ip Time Dial** (address 2642) is derived from the grading coordination plan applicable to the network. If implemented as emergency overcurrent protection, shorter tripping times are advisable (one grading time step above the fast tripping stage), as this function is only activated in the case of the loss of the local measured voltage.

The time multiplier setting **T 3IOp TimeDial** (address 2652) can usually be set smaller according to a separate earth fault grading plan. If only the phase currents are to be monitored, set the pickup value of the earth fault stage to ∞.

In addition to the current-dependent delays, a time fixed delay can be set, if necessary. The settings **T Ip Add** (address 2646 for phase currents) and **T 3IOp Add** (address 2656 for earth currents) are in addition to the time delays resulting from the set curves.

The parameter **I(3IO)p Tele/BI** (address 2670) defines whether the time delays **T Ip Time Dial** (address 2642), including the additional delay **T Ip Add** (address 2646), and **T 3IOp TimeDial** (address 2652), including the additional delay **T 3IOp Add** (address 2656), can be bypassed by the binary input „>O/C InstTRIP“ (No. 7110). The binary input (if allocated) is applied to all stages of the time-overcurrent protection. With **I(3IO)p Tele/BI** = ***YES*** you define that the IP stages trip without delay after pickup if the binary input was activated. For **I(3IO)p Tele/BI** = ***NO*** the set delays are always active.

If the IP stage, when switching the line onto a fault, is to retrip without delay or with a short delay **SOTF Time DELAY** (address 2680, see above under side title „General“), set parameter **I(3IO)p SOTF** (address 2671) to ***YES***. We recommend, however, not to choose the sensitive setting for the fast tripping as switching onto a fault typically causes a solid short circuit. It is important to avoid that the selected stage picks up due to transients during line energization.

Overcurrent Stages I_P, $3I_{0P}$ for Inverse-time Overcurrent Protection with ANSI Characteristics

In the case of the inverse time overcurrent stages, various characteristics can be selected, depending on the ordering version of the device and the configuration (address 126). With ANSI characteristics (address 126 **Back-Up O/C** = ***TOC ANSI***) the following options are available in address 2661 **ANSI Curve**:

Inverse,

Short Inverse,

Long Inverse,

Moderately Inv.,

Very Inverse,

Extremely Inv. and

Definite Inv..

For the setting of the current thresholds **Ip>** (address 2640) and **3IOp PICKUP** (address 2650) the same considerations as for the overcurrent stages of the definite time protection (see above) apply. In this case, it must be noted that a safety margin between the pickup threshold and the set value has already been incorporated. Pickup only occurs at a current which is approximately 10 % above the set value.

The above example shows that the maximum expected operating current may directly be applied as setting here.

Primary: Set value IP = 630 A,

Secondary: Setting value IP = 5.25 A, i.e. (630 A/600 A) X 5 A.

The time multiplier setting **Time Dial TD Ip** (address 2643) is derived from the grading coordination plan applicable to the network. If implemented as emergency overcurrent protection, shorter tripping times are advisable (one grading time step above the fast tripping stage), as this function is only activated in the case of the loss of the local measured voltage.

The time multiplier setting **TimeDial TD3IOp** (address 2653) can usually be set smaller according to a separate earth fault grading plan. If only the phase currents are to be monitored, set the pickup value of the earth fault stage to ∞.

In addition to the inverse-time delays, a delay of constant length can be set, if necessary. The settings **T Ip Add** (address 2646 for phase currents) and **T 3IOp Add** (address 2656 for ground current) are added to the times of the set characteristic curves.

The parameter **I(3IO)p Tele/BI** (address 2670) defines whether the time delays **Time Dial TD Ip** (address 2643), including the additional delay **T Ip Add** (address 2646), and **TimeDial TD3IOp** (address 2653), including the additional delay **T 3IOp Add** (address 2656), can be bypassed by the binary input „>O/C InstTRIP“ (No. 7110). The binary input (if allocated) is applied to all stages of the time-overcurrent protection. With **I(3IO)p Tele/BI** = ***YES*** you define that the IP stages trip without delay after pickup if the binary input was activated. For **I(3IO)p Tele/BI** = ***NO*** the set delays are always active.

If the IP stage, when switching the line onto a fault, is to retrip without delay or with a short delay **SOTF Time DELAY** (address 2680, see above under side title „General“), set parameter **I(3IO)p SOTF** (address 2671) to ***YES***. We recommend, however, not to choose the sensitive setting for the fast tripping as switching onto a fault typically causes a solid short circuit. It is important to avoid that the selected stage picks up due to transients during line energization.

Additional stage I_{ph}>>>

When using the I>>> stage as stub fault protection, the pickup values **Iph> STUB** (address 2630) and **3IO> STUB** (address 2632) are usually not critical since the protection function is only activated when the line isolator is open, which implies that each measured current should be a fault current. With a $1^1/_2$ circuit breaker arrangement, however, it is possible that high short circuit currents flow from busbar A to busbar B or to feeder 2 via the current transformers. These currents could cause different transformation errors in the two current transformer sets $\underline{I}_A$ and $\underline{I}_B$, especially in the saturation range. The protection should therefore not be set unnecessarily sensitive. If the minimum short circuit currents on the busbars are known, the pickup value **Iph> STUB** is set somewhat (approx. 10 %) below the minimum two-phase short circuit current, **3IO> STUB** is set below the minimum single-phase current. If only the phase currents are to be monitored, set the pickup value of the residual current stage to ∞.

The times **T Iph STUB** (address 2631) and **T 3IO STUB** (address 2633) are set to **0** s for this application to prevent the protection from operating while the line isolator is closed.

If this stage is applied differently, similar considerations as for the other overcurrent stages apply.

The parameter **I-STUB Telep/BI** (address 2634) defines whether the time delays **T Iph STUB** (address 2631) and **T 3IO STUB** (address 2633) can be bypassed by the binary input „>O/C InstTRIP“. The binary input (if allocated) is applied to all stages of the time-overcurrent protection. With **I-STUB Telep/BI** = ***YES*** you define that the I>>> stages trip without delay after pickup if the binary input was activated. For **I-STUB Telep/BI** = ***NO*** the set delays are always active.

If theI>>> stage, when switching the line onto a fault, is to trip without delay or with a short delay, **SOTF Time DELAY** (address 2680, see above under margin heading „General“), the parameter **I-STUB SOTF** (address 2635) is set to ***YES***. When used as stub fault protection, select the setting ***NO*** since the effect of this protection function solely depends on the position of the isolator.

2.11.4 Settings

The table indicates region-specific presettings. Column C (configuration) indicates the corresponding secondary nominal current of the current transformer.

Addr.	Parameter	C	Setting Options	Default Setting	Comments
2601	Operating Mode		ON:with VT loss ON:always activ OFF	ON:with VT loss	Operating mode
2610	Iph>>	1A	0.05 .. 50.00 A; ∞	2.00 A	Iph>> Pickup
		5A	0.25 .. 250.00 A; ∞	10.00 A	
2611	T Iph>>		0.00 .. 30.00 sec; ∞	0.30 sec	T Iph>> Time delay
2612	3I0>> PICKUP	1A	0.05 .. 25.00 A; ∞	0.50 A	3I0>> Pickup
		5A	0.25 .. 125.00 A; ∞	2.50 A	
2613	T 3I0>>		0.00 .. 30.00 sec; ∞	2.00 sec	T 3I0>> Time delay
2614	I>> Telep/BI		NO YES	YES	Instantaneous trip via Teleprot./BI
2615	I>> SOTF		NO YES	NO	Instantaneous trip after SwitchOnToFault
2620	Iph>	1A	0.05 .. 50.00 A; ∞	1.50 A	Iph> Pickup
		5A	0.25 .. 250.00 A; ∞	7.50 A	
2621	T Iph>		0.00 .. 30.00 sec; ∞	0.50 sec	T Iph> Time delay
2622	3I0>	1A	0.05 .. 25.00 A; ∞	0.20 A	3I0> Pickup
		5A	0.25 .. 125.00 A; ∞	1.00 A	
2623	T 3I0>		0.00 .. 30.00 sec; ∞	2.00 sec	T 3I0> Time delay
2624	I> Telep/BI		NO YES	NO	Instantaneous trip via Teleprot./BI
2625	I> SOTF		NO YES	NO	Instantaneous trip after SwitchOnToFault
2630	Iph> STUB	1A	0.05 .. 50.00 A; ∞	1.50 A	Iph> STUB Pickup
		5A	0.25 .. 250.00 A; ∞	7.50 A	
2631	T Iph STUB		0.00 .. 30.00 sec; ∞	0.30 sec	T Iph STUB Time delay
2632	3I0> STUB	1A	0.05 .. 25.00 A; ∞	0.20 A	3I0> STUB Pickup
		5A	0.25 .. 125.00 A; ∞	1.00 A	
2633	T 3I0 STUB		0.00 .. 30.00 sec; ∞	2.00 sec	T 3I0 STUB Time delay
2634	I-STUB Telep/BI		NO YES	NO	Instantaneous trip via Teleprot./BI
2635	I-STUB SOTF		NO YES	NO	Instantaneous trip after SwitchOnToFault
2640	Ip>	1A	0.10 .. 4.00 A; ∞	∞ A	Ip> Pickup
		5A	0.50 .. 20.00 A; ∞	∞ A	
2642	T Ip Time Dial		0.05 .. 3.00 sec; ∞	0.50 sec	T Ip Time Dial
2643	Time Dial TD Ip		0.50 .. 15.00 ; ∞	5.00	Time Dial TD Ip

Addr.	Parameter	C	Setting Options	Default Setting	Comments
2646	T Ip Add		0.00 .. 30.00 sec	0.00 sec	T Ip Additional Time Delay
2650	3I0p PICKUP	1A	0.05 .. 4.00 A; ∞	∞ A	3I0p Pickup
		5A	0.25 .. 20.00 A; ∞	∞ A	
2652	T 3I0p TimeDial		0.05 .. 3.00 sec; ∞	0.50 sec	T 3I0p Time Dial
2653	TimeDial TD3I0p		0.50 .. 15.00 ; ∞	5.00	Time Dial TD 3I0p
2656	T 3I0p Add		0.00 .. 30.00 sec	0.00 sec	T 3I0p Additional Time Delay
2660	IEC Curve		Normal Inverse Very Inverse Extremely Inv. LongTimeInverse	Normal Inverse	IEC Curve
2661	ANSI Curve		Inverse Short Inverse Long Inverse Moderately Inv. Very Inverse Extremely Inv. Definite Inv.	Inverse	ANSI Curve
2670	I(3I0)p Tele/BI		NO YES	NO	Instantaneous trip via Tele-prot./BI
2671	I(3I0)p SOTF		NO YES	NO	Instantaneous trip after SwitchOnToFault
2680	SOTF Time DELAY		0.00 .. 30.00 sec	0.00 sec	Trip time delay after SOTF

2.11.5 Information List

No.	Information	Type of Information	Comments
2054	Emer. mode	OUT	Emergency mode
7104	>BLOCK O/C I>>	SP	>BLOCK Backup OverCurrent I>>
7105	>BLOCK O/C I>	SP	>BLOCK Backup OverCurrent I>
7106	>BLOCK O/C Ip	SP	>BLOCK Backup OverCurrent Ip
7110	>O/C InstTRIP	SP	>Backup OverCurrent InstantaneousTrip
7130	>BLOCK I-STUB	SP	>BLOCK I-STUB
7131	>I-STUB ENABLE	SP	>Enable I-STUB-Bus function
7151	O/C OFF	OUT	Backup O/C is switched OFF
7152	O/C BLOCK	OUT	Backup O/C is BLOCKED
7153	O/C ACTIVE	OUT	Backup O/C is ACTIVE
7161	O/C PICKUP	OUT	Backup O/C PICKED UP
7162	O/C Pickup L1	OUT	Backup O/C PICKUP L1
7163	O/C Pickup L2	OUT	Backup O/C PICKUP L2
7164	O/C Pickup L3	OUT	Backup O/C PICKUP L3
7165	O/C Pickup E	OUT	Backup O/C PICKUP EARTH
7171	O/C PU only E	OUT	Backup O/C Pickup - Only EARTH
7172	O/C PU 1p. L1	OUT	Backup O/C Pickup - Only L1
7173	O/C Pickup L1E	OUT	Backup O/C Pickup L1E
7174	O/C PU 1p. L2	OUT	Backup O/C Pickup - Only L2
7175	O/C Pickup L2E	OUT	Backup O/C Pickup L2E
7176	O/C Pickup L12	OUT	Backup O/C Pickup L12
7177	O/C Pickup L12E	OUT	Backup O/C Pickup L12E
7178	O/C PU 1p. L3	OUT	Backup O/C Pickup - Only L3
7179	O/C Pickup L3E	OUT	Backup O/C Pickup L3E
7180	O/C Pickup L31	OUT	Backup O/C Pickup L31
7181	O/C Pickup L31E	OUT	Backup O/C Pickup L31E
7182	O/C Pickup L23	OUT	Backup O/C Pickup L23
7183	O/C Pickup L23E	OUT	Backup O/C Pickup L23E
7184	O/C Pickup L123	OUT	Backup O/C Pickup L123
7185	O/C PickupL123E	OUT	Backup O/C Pickup L123E
7191	O/C PICKUP I>>	OUT	Backup O/C Pickup I>>
7192	O/C PICKUP I>	OUT	Backup O/C Pickup I>
7193	O/C PICKUP Ip	OUT	Backup O/C Pickup Ip
7201	I-STUB PICKUP	OUT	O/C I-STUB Pickup
7211	O/C TRIP	OUT	Backup O/C General TRIP command
7212	O/C TRIP 1p.L1	OUT	Backup O/C TRIP - Only L1
7213	O/C TRIP 1p.L2	OUT	Backup O/C TRIP - Only L2
7214	O/C TRIP 1p.L3	OUT	Backup O/C TRIP - Only L3
7215	O/C TRIP L123	OUT	Backup O/C TRIP Phases L123
7221	O/C TRIP I>>	OUT	Backup O/C TRIP I>>
7222	O/C TRIP I>	OUT	Backup O/C TRIP I>
7223	O/C TRIP Ip	OUT	Backup O/C TRIP Ip
7235	I-STUB TRIP	OUT	O/C I-STUB TRIP

2.12 Instantaneous high-current switch-on-to-fault protection (SOTF)

The instantaneous high-current switch-onto-fault protection function is provided to disconnect immediately, and without any time delay, feeders that are switched onto a high-current fault. It is primarily used as fast protection in the event of energizing the feeder while the earth switch is closed, but can also be used every time the feeder is energized —in other words also following automatic reclosure— (selectable).

The energization of the feeder is reported to the protection by the circuit breaker state recognition function. This function is described in detail in Section 2.20.1.

2.12.1 Method of Operation

Pickup

The high-current pickup function measures each phase current and compares it with the set value **I>>>** (address 2404). The currents are numerically filtered to eliminate the DC component. If the measured current is more than twice the set value, the protection automatically reverts to the unfiltered measured values, thereby allowing extremely fast tripping. DC current components in the fault current and in the CT secondary circuit following the switching off of large currents have virtually no influence on the high-current pickup operation.

The high-current switch-onto-fault protection can operate separately for each phase or in three phases. Following manual closure of the circuit breaker it always operates three-phase via the release signal „Energization“, which is derived from thecentral state recognition in the device, assuming that the manual closure can be recognized there (see Section 2.20.1, „Generation of the energization signal“, Figure 2-169).

If further criteria were determined during the configuration of the recognition of line energization (address 1134 **Line Closure**, refer to Section 2.1.4.1) the release signal „SOTF-O/C Release Lx“ may be issued phase segregated, following three phase closure the release of all three phases is given. The phase segregated release only applies to devices that can trip single-pole, and is then important in conjunction with single-pole automatic reclosure.

Tripping is always three-pole. The phase selectivity only applies to the pick-up due to the coupling of the high current criterion with the circuit breaker pole which is closed.

In order to generate a trip command as quickly as possible after an energisation, the fast switch-onto-fault protection is released selectively for each phase after a pole is detected open for the set time **T DELAY SOTF** (address 1133).

The following figure shows the logic diagram.

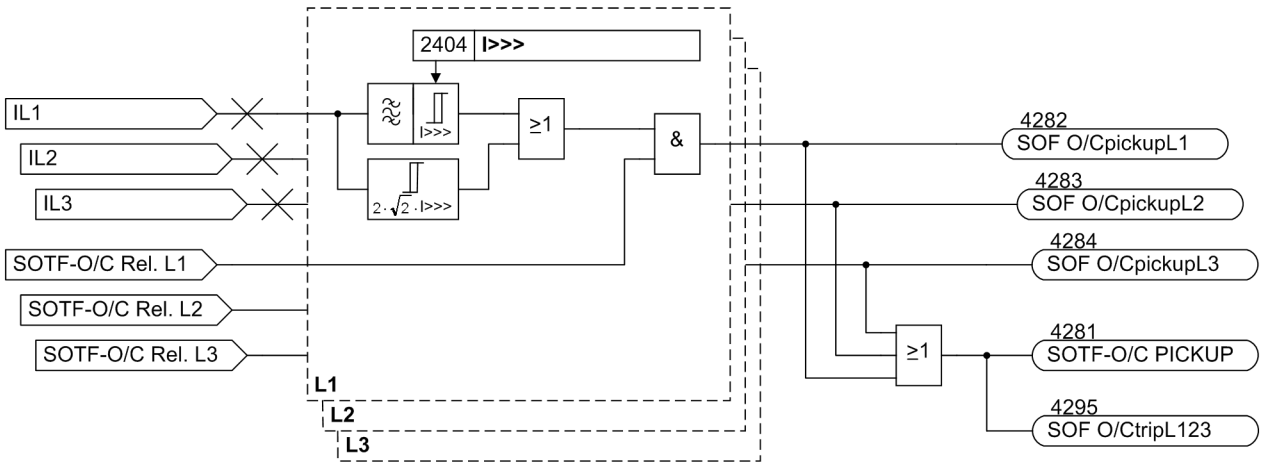

Figure 2-108 Logic diagram of the high-current switch-onto-fault protection

2.12.2 Setting Notes

Requirement

A prerequisite for the operation of the switch-onto-fault protection is that in address 124 **SOTF Overcurr.** = ***Enabled*** was set during the configuration of the device scope of functions. At address 2401 **FCT SOTF-O/C** it can also be switched ***ON*** or ***OFF***.

Pickup Value

The magnitude of the current which causes pick-up of the switch-onto-fault function is set as **I>>>** in address 2404. The setting value should be selected large enough to ensure that the protection does not under any circumstances pick up due to a line overload or due to a current increase e.g. resulting from an automatic reclosure dead time on a parallel feeder. It is recommended to set at least 2.5 times the rated current of the feeder.

2.12.3 Settings

The table indicates region-specific presettings. Column C (configuration) indicates the corresponding secondary nominal current of the current transformer.

Addr.	Parameter	C	Setting Options	Default Setting	Comments
2401	FCT SOTF-O/C		ON OFF	ON	Inst. High Speed SOTF-O/C is
2404	I>>>	1A	0.10 .. 25.00 A	2.50 A	I>>> Pickup
		5A	0.50 .. 125.00 A	12.50 A	

2.12.4 Information List

No.	Information	Type of Information	Comments
4253	>BLOCK SOTF-O/C	SP	>BLOCK Instantaneous SOTF Overcurrent
4271	SOTF-O/C OFF	OUT	SOTF-O/C is switched OFF
4272	SOTF-O/C BLOCK	OUT	SOTF-O/C is BLOCKED
4273	SOTF-O/C ACTIVE	OUT	SOTF-O/C is ACTIVE
4281	SOTF-O/C PICKUP	OUT	SOTF-O/C PICKED UP
4282	SOF O/CpickupL1	OUT	SOTF-O/C Pickup L1
4283	SOF O/CpickupL2	OUT	SOTF-O/C Pickup L2
4284	SOF O/CpickupL3	OUT	SOTF-O/C Pickup L3
4295	SOF O/CtripL123	OUT	SOTF-O/C TRIP command L123

2.13 Automatic reclosure function (optional)

Experience shows that about 85% of the arc faults on overhead lines are extinguished automatically after being tripped by the protection. The line can therefore be re-energised. Reclosure is performed by an automatic reclose function (AR).

Automatic reclosure function is only permitted on overhead lines because the possibility of extinguishing a fault arc automatically only exists there. It must not be used in any other case. If the protected object consists of a mixture of overhead lines and other equipment (e.g. overhead line in block with a transformer or overhead line/cable), it must be ensured that reclosure can only be performed in the event of a fault on the overhead line.

If the circuit breaker poles can be operated individually, a 1-pole automatic reclosure is usually initiated in the case of 1-phase faults and a 3-pole automatic reclosure in the case of multi-phase faults in the network with earthed system star point. If the fault still exists after reclosure (arc not extinguished or metallic short-circuit), the protection issues a final trip. In some systems several reclosing attempts are performed.

In the model with 1-pole tripping the 7SA522 allows phase-selective 1-pole tripping. A 1- and 3-pole, one- and multi-shot automatic reclosure is integrated depending on the order variant.

The 7SA522 can also operate in conjunction with an external automatic reclosure device. In this case, the signal exchange between 7SA522 and the external reclosure device must be effected via binary inputs and outputs.

It is also possible to initiate the integrated auto reclose function by an external protection device (e.g. a backup protection). The use of two 7SA522 with automatic reclosure function or the use of one 7SA522 with an automatic reclosure function and a second protection with its own automatic reclosure function is also possible.

2.13.1 Function Description

Reclosure is performed by an automatic reclosure circuit (ARC). An example of the normal time sequence of a double reclosure is shown in the figure below.

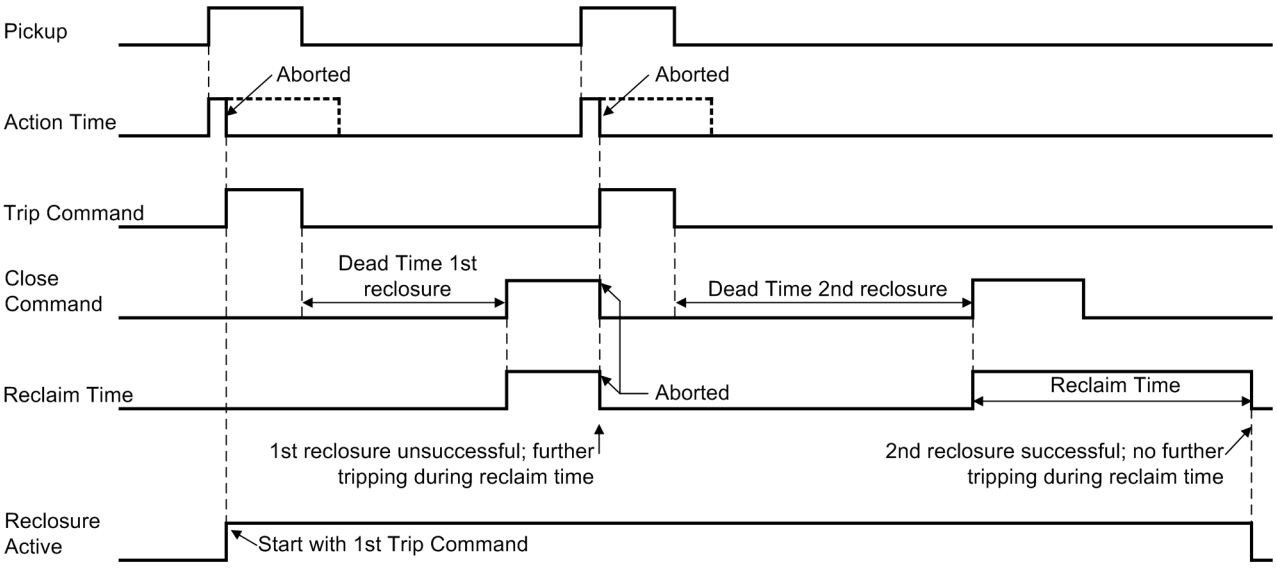

Figure 2-109 Timing diagram of a double-shot reclosure with action time (2nd reclosure successful)

The integrated automatic reclosing function allows up to 8 reclosing attempts. The first four reclose cycles may operate with different parameters (action and dead times, 1-/3-pole). The parameters of the fourth cycle apply to the fifth cycle and onwards.

Selectivity before Reclosure

In order that automatic reclosure function can be successful, all faults on the entire overhead line must be cleared at all line ends simultaneously — as fast as possible.

In the distance protection, for example, the overreach zone Z1B may be released before the first reclosure. This implies that faults up to the zone reach limit of Z1B are tripped without delay for the first cycle (Figure 2-110). A limited unselectivity in favour of fast simultaneous tripping is accepted here because a reclosure will be performed in any case. The normal stages of the distance protection (Z1, Z2, etc.) and the normal grading of the other short-circuit functions are independent of the automatic reclosure function function.

Reach for 1st Tripping before Reclosure (Overreach Zone Z1B Enabled)

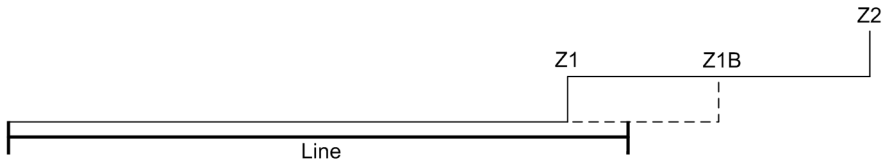

Reach after 1st Reclosure (Overreach Zone Z1B Disabled)

Figure 2-110 Reach control before first reclosure, using distance protection

If the distance protection is operated with one of the signal transmission methods described in Section 2.6 the signal transmission logic controls the overreaching zone, i.e. it determines whether a non-delayed trip (or delayed with T1B) is permitted in the event of faults in the overreaching zone (i.e. up to the reach limit of zone Z1B) at both line ends simultaneously. Whether the automatic reclosure device is ready for reclosure or not is irrelevant, because the teleprotection function ensures the selectivity over 100% of the line length and fast, simultaneous tripping. The same applies for the earth fault-direction comparison protection (Section 2.8).

If, however, the signal transmission is switched off or the transmission path is disturbed, the internal automatic reclosure circuit can determine whether the overreaching zone (Z1B in the distance protection) is released for fast tripping. If no reclosure is expected (e.g. circuit breaker not ready) the normal grading of the distance protection (i.e. fast tripping only for faults in zone Z1) must apply to retain selectivity.

Fast tripping before reclosure is also possible with multiple reclosures. Appropriate links between the output signals (e.g. 2nd reclosure ready: „AR 2.CycZoneRel“) and the inputs for enabling/releasing non-delayed tripping of the protection functions can be established via the binary inputs and outputs or the integrated user-definable logic functions (CFC).

Mixed Lines Overhead Line/Cable

In the distance protection, it is possible to use the distance zone signals to distinguish between cable and overhead line faults to a certain extent. The automatic reclosure circuit can then be blocked by appropriate signals generated by means of the user-programmable logic functions (CFC) if there is a fault in the cable section.

Initiation

Initiation of the automatic reclosure function means storing the first trip signal of a power system fault that was generated by a protection function which operates with the automatic reclosure function. In case of multiple reclosure, initiation therefore only takes place once, with the first trip command. This storing of the first trip signal is the prerequisite for all subsequent activities of the automatic reclosure function. The starting is important when the first trip command has not appeared before expiry of an action time (see below under „Action times“).

Automatic reclosure function is not started if the circuit breaker has not been ready for at least one OPEN-CLOSE-OPEN–cycle at the instant of the first trip command. This can be achieved by setting parameters. For further information, please refer to „Interrogation of Circuit Breaker Ready State“.

Each short-circuit protection function can be parameterized as to whether it should operate with the automatic reclose function or not, i.e. whether it should start the reclose function or not. The same goes for external trip commands applied via binary input and/or the trip commands generated by the teleprotection via permissive or intertrip signals.

Those protection and monitoring functions in the device which do not respond to short-circuits or similar conditions (e.g. an overload protection) do not initiate the automatic reclosure function because a reclosure will be of no use here. The circuit breaker failure protection must not start the automatic reclosure function either.

Action Times

It is often desirable to neutralise the ready–for–reclosure–state if the short-circuit condition was sustained for a certain time, e.g. because it is assumed that the arc has burned in to such an extent that there is no longer any chance of automatic arc extinction during the reclose dead time. Also for the sake of selectivity (see above), faults that are usually cleared after a time delay should not lead to reclosure. It is therefore recommended to use action times in conjunction with the distance protection.

The automatic reclosure function of the 7SA522 can be operated with or without action times (configuration parameter **`AR control mode`**, address 134, see Section 2.1.1.2). No starting signal is necessary from the protection functions or external protection devices that operate without action time. Initiation takes place as soon as the first trip command appears.

When operating with action time, an action time is available for each reclose cycle. The action times are always started by the general starting signal (with logic OR combination of all internal and external protection functions which can start the automatic reclose function). If no trip command is present before the action time expires, the corresponding reclosure cycle is not carried out.

For each reclosure cycle, it can be specified whether or not it should allow the initiation. Following the first general pickup, only those action times are relevant whose cycles allow starting because the other cycles are not allowed to initiate. By means of the action times and the permission to start the recloser (permission to be the first cycle that is executed), it is possible to determine which reclose cycles are executed depending on the time it takes the protection function to trip.

Example 1: 3 cycles are set. Starting of the automatic reclosure function is allowed for at least the first cycle. The action times are set as follows:

- 1st Reclosure: T Action = 0.2 s;
- 2nd Reclosure: T Action = 0.8 s;
- 3rd Reclosure: T Action = 1.2 s;

Since reclosure is ready before the fault occurs, the first trip of a time overcurrent protection following a fault is fast, i.e. before the end of any action time. This starts the automatic reclose function. After unsuccessful reclosure, the 2nd cycle would then become active; but the time overcurrent protection does not trip in this example until after 1s according to its grading time. Since the action time for the second cycle was exceeded here, the second cycle is blocked. The 3rd cycle with its parameters is therefore carried out now. If the trip command appeared more than 1.2 s after the 1st reclosure, there would be no further reclosure.

Example 2: 3 cycles are set. Starting is only allowed for the first. The action times are set as in example 1. The first protection trip takes place 0.5 s after starting. Since the action time for the 1st cycle has already expired at this time, this cannot start the automatic reclose function. As the 2nd and 3rd cycles are not permitted to start the reclose function they will also not be initiated. Therefore no reclosure takes place as no starting took place.

Example 3: 3 cycles are set. At least the first two cycles are set such that they can start the recloser. The action times are set as in example 1. The first protection trip takes place 0.5 s after starting. Since the action time for the 1st cycle has already expired at this time, it cannot start the automatic reclosure function, but the 2nd cycle, for which initiating is allowed, is activated immediately. This 2nd cycle therefore starts the automatic reclosure function, the 1st cycle is practically skipped.

Operating modes of the automatic reclosure function

The dead times — these are the times from elimination of the fault (drop off of the trip command or signalling via auxiliary contacts) to the initiation of the automatic close command — may vary depending on the automatic reclosure function operating mode selected when determining the function scope and the resulting signals of the starting protection functions.

In control mode ***TRIP...*** (With TRIP command ...), 1-pole or 1-/3-pole reclose cycles are possible if the device and the circuit breaker are suitable. In this case, different dead times (for every AR cycle) are possible after 1-pole tripping and after 3-pole tripping. The protection function that issues the trip command determines the type of trip: 1-pole or 3-pole. The dead time is controlled dependent on this.

In control mode ***PICKUP ...*** (With PICKUP...), different dead times can be set for every reclose cycle after 1-, 2- and 3-phase faults. The pickup diagram of the protection functions at the instant when the trip command disappears is the decisive factor. This mode allows the dead time to be made dependant on the type of fault in the case of 3-pole tripping applications.

Blocking reclosure

Different conditions lead to blocking of the automatic reclosure function. No reclosure is possible, for example, if it is blocked via a binary input. If the automatic reclosure function has not yet been started, it cannot be started at all. If a reclosure cycle is already in progress, dynamic blocking takes place (see below).

Each individual cycle may also be blocked via binary input. In this case the cycle concerned is declared as invalid and will be skipped in the sequence of permissible cycles. If blocking takes place while the cycle concerned is already running, this leads to aborting of the reclosure, i.e. no reclosure takes place even if other valid cycles have been parameterized.

Internal blocking signals, with a limited duration, arise during the course of the reclose cycles:

The reclaim time **T-RECLAIM** (address 3403) is started with each automatic reclosure command. The only exception is the ADT mode where the reclaim time can be disabled by setting it to 0 s. If the reclosure is successful, all functions of the automatic reclosure function return to the idle state at the end of the reclaim time; a fault after expiry of the reclaim time is treated as a new fault in the power system. If the reclaim time is disabled in ADT mode, each new trip after reclosing is considered as a new fault. If one of the protection functions causes another trip during the reclaim time, the next reclosure cycle will be started if multiple reclosure has been set. If no further reclosure attempts are permitted, the last reclosure is regarded as unsuccessful in case of another trip during the reclaim time. The automatic reclosure function is blocked dynamically.

The dynamic lock-out locks the reclosure for the duration of the dynamic lock-out time (0.5 s). This occurs, for example, after a final trip or other events which block the auto reclose function after it has been started. Restarting is blocked during this time. When this time expires, the automatic reclosure function returns to its quiescent state and is ready for a new fault in the network.

If the circuit breaker is closed manually (by the control discrepancy switch connected to a binary input, the local control functions or via one of the serial interfaces), the automatic reclosure function is blocked for a manual-close-blocking time **T-BLOCK MC**, address 3404. If a trip command occurs during this time, it can be assumed that a metallic short-circuit is present (e.g. closed earth switch). Every trip command within this time is therefore

final. With the user definable logic functions (CFC) further control functions can be processed in the same way as a manual–close command.

Interrogation of the Circuit Breaker Ready State

A precondition for automatic reclosure function following clearance of a short-circuit is that the circuit breaker is ready for at least one OPEN-CLOSE-OPEN-cycle when the automatic reclosure circuit is started (i.e. at the time of the first trip command). The readiness of the circuit breaker is signalled to the device via the binary input „>CB1 Ready“ (No. 371). If no such signal is available, the circuit breaker interrogation can be suppressed (presetting of address 3402) as automatic reclosure function would otherwise not be possible at all.

In the event of a single cycle reclosure this interrogation is usually sufficient. Since, for example, the air pressure or the spring tension for the circuit breaker mechanism drops after the trip, no further interrogation should take place.

For multiple reclosing attempts it is highly recommended to monitor the circuit breaker condition not only prior to the first, but also before each following reclosing attempt. Reclosure will be blocked until the binary input indicates that the circuit breaker is ready to complete another CLOSE-TRIP cycle.

The time needed by the circuit breaker to regain the ready state can be monitored by the 7SA522. This monitoring time **CB TIME OUT** (address 3409) starts as soon as the CB indicates the not ready state. The dead time may be extended if the ready state is not indicated when it expires. However, if the circuit breaker does not indicate its ready status for a longer period than the monitoring time, reclosure is dynamically blocked (see also above under margin heading „Reclosure Blocking“).

Processing the circuit breaker auxiliary contacts

If the circuit breaker auxiliary contacts are connected to the device, the reaction of the circuit breaker is also checked for plausibility.

In the case of 1-pole tripping this applies to each individual circuit breaker pole. This assumes that the auxiliary contacts are connected to the appropriate binary inputs for each pole („>CB1 Pole L1“, No. 366; „>CB1 Pole L2“, No. 367; „>CB1 Pole L3“, No. 368).

If, instead of the individual pole auxiliary contacts, the series connections of the normally open and normally closed contacts are used, the CB is assumed to have all three poles open when the series connection of the normally closed contacts is closed (binary input „>CB1 3p Open“, No. 411). All three poles are assumed closed when the series connection of the normally open contacts is closed (binary input „>CB1 3p Closed“, No. 410). If none of these input indications is active, it is assumed that the circuit breaker is open at one pole (even if this condition also exists theoretically when two poles are open).

The device continuously checks the position of the circuit breaker: As long as the auxiliary contacts indicate that the CB is not closed (3-pole), the automatic reclosure function cannot be started. This ensures that a close command can only be issued if the CB has previously tripped (out of the closed state).

The valid dead time begins when the trip command disappears or, in addition, when signals taken from the CB auxiliary contacts indicate that the CB (pole) has opened.

If, after a **1-**pole trip command, the CB has opened **3-**pole, this is considered as a 3-pole tripping. If 3-pole reclose cycles are allowed, the dead time for 3-pole tripping becomes active in the **operating mode with trip command** (see margin heading „Operating modes of the automatic reclosure“, above). If 3-pole cycles are not allowed, the reclosure is blocked dynamically. The trip command is final.

The latter also applies if the CB trips two poles following a 1-pole trip command. The device can only detect this if the auxiliary contacts of each pole are connected individually. The device immediately initiates 3-pole coupling which results in a 3-pole trip command.

If the CB auxiliary contacts indicate that at least one further pole has opened during the dead time after 1-pole tripping, a 3-pole reclose cycle is initiated with the dead time for 3-pole reclosure provided that this is permitted. If the auxiliary contacts are connected for each pole individually, the device can detect a two-pole open CB. In this case the device immediately sends a 3-pole trip command provided that the forced 3-pole trip is activated (see Section 2.13.2 at margin heading „Forced 3-pole trip“).

Sequence of a 3-pole reclose cycle

If the automatic reclosure function is ready, the fault protection trips 3-pole for all faults inside the stage selected for reclosure. The automatic reclosure function is started. When the trip command resets or the circuit breaker opens (auxiliary contact criterion) an adjustable dead time starts. At the end of this dead time, the circuit breaker receives a close command. At the same time, the (adjustable) dead time is started. If, when configuring the protection functions, at address 134 **AR control mode** = ***with Pickup*** was set, different dead times can be parameterised depending on the type of fault recognised by the protection.

If the fault is cleared (successful reclosure), the reclaim time expires and all functions return to their quiescent state. The fault is cleared.

If the fault has not been eliminated (unsuccessful reclosure), the short-circuit protection initiates a final trip following a protection stage active without reclosure. Any fault during the reclaim time leads to a final trip.

After unsuccessful reclosure (final tripping) the automatic reclosure function is blocked dynamically (see also margin heading „Reclose Block“, above).

The sequence above applies for single reclosure cycles. In 7SA522 multiple reclosure (up to 8 shots) is also possible (see below).

Sequence of a 1-pole reclose cycle

1-pole reclose cycles are only possible with the appropriate device version and if this was selected during the configuration of the protection functions (address 110 **Trip mode**, see also Section 2.1.1.2). Of course, the circuit breaker must also be suitable for 1-pole tripping.

If the automatic reclosure function is ready, the short-circuit protection trips 1-pole for all 1-phase faults inside the stage(s) selected for reclosure. Under the general settings (address 1156 **Trip2phFlt**, see also Section 2.1.4.1) it can also be selected that 1-pole tripping takes place for two-phase faults without earth. 1-pole tripping is of course only possible by short-circuit protection functions which can determine the faulty phase.

If multiple-phase faults occur, the fault protection issues a final 3-pole trip with the stage that is valid without reclosure. Any 3-pole trip is final. The automatic reclosure function is blocked dynamically (see also margin heading „Blocking reclosure“, above).

The automatic reclosure function is started in the case of 1-pole tripping. The (adjustable) dead time for the 1-pole reclose cycle starts with reset of the trip command or opening of the circuit breaker pole (auxiliary contact criterion). After expiry of the dead time, the circuit breaker receives a close command. At the same time, the (adjustable) reclaim time is started. If the reclosure is blocked during the dead time following a 1-pole trip, immediate 3-pole tripping can take place as an option (forced 3-pole trip).

If the fault is cleared (successful reclosure), the reclaim time expires and all functions return to their quiescent state. The fault is cleared.

If the fault has not been eliminated (unsuccessful reclosure), the short-circuit protection initiates a final 3-pole trip with the protection stage that is valid without reclosure. All faults during the reclaim time also lead to a final 3-pole trip.

After unsuccessful reclosure (final tripping) the automatic reclosure function is blocked dynamically (see also margin heading „Reclose Block“, above).

The sequence above applies for single reclosure cycles. In 7SA522 multiple reclosure (up to 8 shots) is also possible (see below).

Sequence of a 1-pole and 3-pole Reclose Cycle

This operating mode is only possible with the appropriate device version if selected during configuration of the protection functions (address 110, see also Section 2.1.1.2). Also, the circuit breaker must be suitable for 1-pole tripping.

If the automatic reclosure function is ready, the short-circuit protection trips 1-pole for 1-phase faults and 3-pole for multi-phase faults. Under the general settings (address 1156 **Trip2phFlt**, see also Section 2.1.4.1) 1-pole tripping for two-phase faults without earth can be selected. 1-pole tripping is only possible for short-circuit protection functions that can determine the faulted phase. The valid protection stage selected for reclosure ready state applies for all fault types.

The automatic reclosure function is started at the moment of tripping. Depending on the type of fault, the (adjustable) dead time for the 1-pole reclose cycle or the (separately adjustable) dead time for the 3-pole reclose cycle starts following the reset of the trip command or opening of the circuit breaker (pole) (auxiliary contact criterion). After expiry of the dead time, the circuit breaker receives a close command. At the same time, the (adjustable) reclaim time is started. If the reclosure is blocked during the dead time following a 1-pole trip, immediate 3-pole tripping can take place as an option (forced 3-pole trip).

If the fault is cleared (successful reclosure), the reclaim time expires and all functions return to their quiescent state. The fault is cleared.

If the fault has not been eliminated (unsuccessful reclosure), the short-circuit protection initiates a final 3-pole trip with the protection stage that is valid without reclosure. All faults during the reclaim time also lead to a final 3-pole trip.

After unsuccessful reclosure (final tripping), the automatic reclosure function is blocked dynamically (see also margin heading „Reclose Block“, above).

The sequence above applies for single reclosure cycles. In 7SA522 multiple reclosure (up to 8 shots) is also possible (see below).

Multiple auto-reclosure

If a short-circuit still exists after a reclosure attempt, further reclosure attempts can be made. Up to 8 reclosure attempts are possible with the automatic reclosure function integrated in the 7SA522.

The first four reclosure cycles are independent of each other. Each one has separate action and dead times, can operate with 1- or 3-pole trip and can be blocked separately via binary inputs. The parameters and intervention possibilities of the fourth cycle also apply to the fifth cycle and onwards.

The sequence is the same in principle as in the different reclosure programs described above. However, if the first reclosure attempt was unsuccessful, the reclosure function is not blocked, but instead the next reclose cycle is started. The appropriate dead time starts with the reset of the trip command or opening of the circuit breaker (pole) (auxiliary contact criterion). The circuit breaker receives a new close command after expiry of the dead time. At the same time the reclaim time is started.

The reclaim time is reset with each new trip command after reclosure and is started again with the next close command until the set maximum number of permissible auto-reclose cycles has been reached.

If one of the reclosing attempts is successful, i.e. the fault disappeared after reclosure, the blocking time expires and the automatic reclosing system is reset. The fault is cleared.

If none of the cycles is successful, the short-circuit protection initiates a final 3-pole trip after the last permissible reclosure, following a protection stage that is valid without auto-reclosure. The automatic reclosure function is blocked dynamically (see also margin heading „Blocking reclosure“, above).

Handling Evolving Faults

When 1-pole or 1-and 3-pole reclose cycles are executed in the network, particular attention must be paid to sequential faults.

Evolving faults are faults which occur during the dead time after clearance of the first fault.

There are various ways of handling sequential faults in the 7SA522 depending on the requirements of the network:

To **detect** an evolving fault, you can select either the trip command of a protection function during the dead time or every further pickup as the criterion for an evolving fault.

There are also various selectable possibilities for the **response** of the internal auto- reclose function to a detected evolving fault.

- **`EV. FLT. MODE`** ***`blocks AR`***:

  The reclosure is blocked as soon as a sequential fault is detected. The tripping by the sequential fault is always 3-pole. This applies irrespective of whether 3-pole cycles have been permitted or not. There are no further reclosure attempts; the automatic reclosure function is blocked dynamically (see also margin heading „Blocking reclosure“, above).

- **`EV. FLT. MODE`** ***`starts 3p AR`***:

  As soon as a sequential fault is detected, the recloser switches to a 3-pole cycle. Each trip command is 3-pole. The separately settable dead time for sequential faults starts with the clearance of the sequential fault; after the dead time the circuit breaker receives a close command. The further sequence is the same as for 1- and 3-pole cycles.

  The complete dead time in this case consists of the part of the dead time for the 1-pole reclosure up to the clearance of the sequential fault plus the dead time for the sequential fault. This makes sense because the duration of the 3-pole dead time is most important for the stability of the network.

If reclosure is blocked due to a sequential fault without the protection issuing a 3-pole trip command (e.g. for sequential fault detection with starting), the device can send a 3-pole trip command so that the circuit breaker does not remain open with one pole (forced 3-pole trip).

Forced 3-pole trip

If reclosure is blocked during the dead time of a 1-pole cycle without a 3-pole trip command having been initiated, the breaker would remain open at one pole. In most cases, the circuit breaker is equipped with a pole discrepancy supervision which will trip the remaining poles after a few seconds. By setting a parameter, you can achieve that the tripping logic of the device immediately sends a 3-pole trip command in this case. This forced 3-pole trip pre-empts the pole discrepancy supervision of the CB because the forced 3-pole trip of the device is initiated as soon as the reclosure is blocked following a 1-pole trip or if the CB auxiliary contacts report an implausible breaker state.

When different internal protection functions initiate a 1-pole trip in different phases, the device will issue a 3-pole trip command due to the tripping logic (Section 2.20.1), independent of this forced 3-pole trip. This is also true for trip commands given via the direct local trip inputs (Section 2.10) or the reception of a remote trip (Section 2.5) since these signals directly affect the tripping logic of the device.

If the device trips 1-pole and if an external trip command in another phase only reaches the device via one of the binary inputs, e.g. „`>Trip L1 AR`“ to the internal automatic reclosure function, this is not routed to the tripping logic. In this case, 3-pole trip is ensured only if the forced 3-pole trip is effective.

The forced 3-pole trip is also activated when only 3-pole cycles are allowed, but a 1-pole trip is signalled externally via a binary input.

Dead Line Check (DLC)

If the voltage of a disconnected phase does not disappear following a trip, reclosure can be prevented. A prerequisite for this function is that the voltage transformers are connected on the line side of the circuit breaker. To select this function the dead line check must be activated. The automatic reclosure function then checks the disconnected line for no-voltage: the line must have been without voltage for at least an adequate measuring time during the dead time. If this was not the case, the reclosure is blocked dynamically.

This no-voltage check on the line is of advantage if a small generator (e.g. wind generator) is connected along the line.

Reduced Dead Time (RDT)

If automatic reclosure function is performed in connection with time-graded protection, non-selective tripping before reclosure is often unavoidable in order to achieve fast, simultaneous tripping at all line ends. The 7SA522 has a „reduced dead time (RDT)“ procedure which reduces the effect of the short-circuit on healthy line sections to a minimum. All phase-to-phase and phase-to-earth voltages are measured for the reduced dead time procedure. These voltages must rise above the threshold **`U-live>`** (address 3440) for the voltage measuring time **`T U-stable`** (address 3438). The value set for **`U-live>`** is appropriately converted for the phase-to-phase voltages. The voltage transformers must be located on the line side of the circuit breaker.

In the event of a short-circuit close to one of the line ends, the surrounding lines can initially be tripped because, for example, a distance protection detects the fault in its overreaching zone Z1B (Figure 2-111, mounting location III). If the network is meshed and there is at least one other infeed on busbar B, the voltage there returns immediately after clearance of the fault. For 1-pole tripping it is sufficient if there is an earthed transformer with delta winding connected at busbar B which ensures symmetry of the voltages and thus induces a return voltage in the open phase. This allows a distinction between the faulty line and the unfaulted line to be made as follows:

Since line B - C is only tripped singled-ended at C, it receives a return voltage from the end B which is not tripped so that at C the open phase(s) also has(have) voltage. If the device detects this at position III, reclosure can take place immediately or in a shorter time (to ensure sufficient voltage measuring time). The healthy line B - C is then back in operation.

Line A–B is tripped at both ends. No voltage is therefore present identifying the line as the faulted one at both ends. The normal dead time comes into service here.

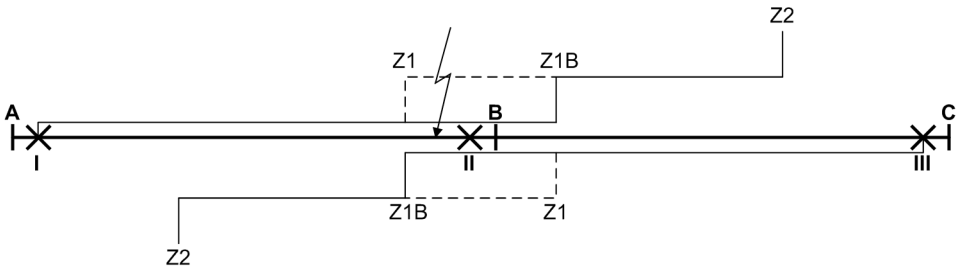

Figure 2-111 Example of a reduced dead time (RDT)

A, B, C	Busbars
I, II, III	Relay locations
X	Tripped circuit breakers

Adaptive Dead Time (ADT)

In all the previous alternatives it was assumed that defined and equal dead times were set at both line ends, if necessary for different fault types and/or reclose cycles.

It is also possible to set the dead times (for different fault types and/or reclose cycles, if necessary) at one line end only and to configure the adaptive dead time at the other end(s). This requires that the voltage transformers are located on the line side of the circuit breaker or that a close command can be sent to the remote line end.

Figure 2-112 shows an example with voltage measurement. It is assumed that device I operates with defined dead times whereas the adaptive dead time is configured at position II. It is important that the line is at least fed from busbar A, i.e. the side with the defined dead times.

When using the adaptive dead time, the automatic reclosing function at line end II decides autonomously whether to allow reclosing or not. Its decision is based on the line voltage at end II, which was reapplied from end I following reclosure. Device II will thus initiate reclosing as soon as it is evident that the line has been re-energized from end I. All phase-to-phase and phase-to-earth voltages are monitored.

In the illustrated example, the lines are disconnected at positions I, II and III. In I reclosure takes place after the configured dead time. At position III a reduced dead time can be used (see above) if there is also an infeed on busbar B.

If the fault has been cleared (successful reclosure), line A - B is re-connected to the voltage at busbar A through position I. Device II detects this voltage and also recloses after a short delay (to ensure a sufficient voltage measuring time). The fault is cleared.

If the fault has not been cleared after reclosure at I (unsuccessful reclosure), the line will be disconnected again in position I with the result that no healthy voltage is detected at location II so that the circuit breaker there does not reclose.

In the case of multiple reclosure the sequence may be repeated several times following an unsuccessful reclosure until one of the reclosure attempts is successful or a final trip takes place.

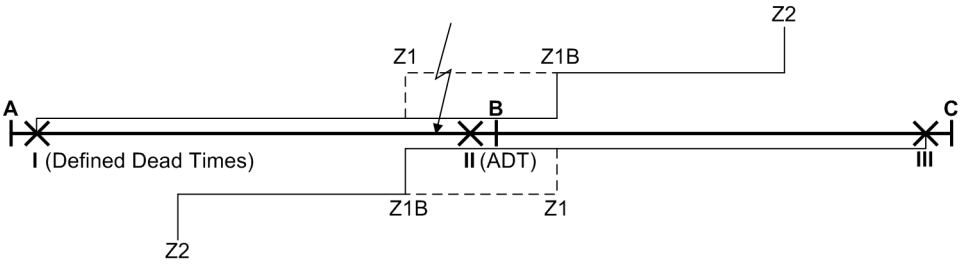

Figure 2-112 Example of adaptive dead time (ADT)

A, B, C Busbars

I, II, III Relay locations

X Tripped circuit breakers

As is shown by the example, the adaptive dead time has the following advantages:

- The circuit breaker at position II is not reclosed if the fault persists and is not unnecessarily stressed as a result.
- With non-selective tripping by overreach at position III no further trip and reclose cycles occur here because the short-circuit path via busbar B and position II remains interrupted even in the event of several reclosure attempts.
- At position I overreach is allowed in the case of multiple reclosures and even in the event of final tripping because the line remains open at position II and therefore no actual overreach can occur at I.

The adaptive dead time also includes the reduced dead time because the criteria are the same. There is no need to set the reduced dead time as well.

CLOSE Command Transmission (Remote-CLOSE)

With close command transmission via the digital connection paths the dead times are only set at one line end. The other line end (or line ends in lines with more than two ends) is set to „Adaptive Dead Time (ADT)“. The latter merely responds to the close commands received from the transmitting end.

At the sending line end, the transmission of the close command is delayed until it is sure that the local reclosure was successful. This means that the device waits whether a local pickup still occurs after reclosing. This delay prevents unnecessary closing at the remote end on the one hand but also increases the time until reclosure takes place there. This is not critical for a 1-pole interruption or in radial or meshed networks if no stability problems are expected under these conditions.

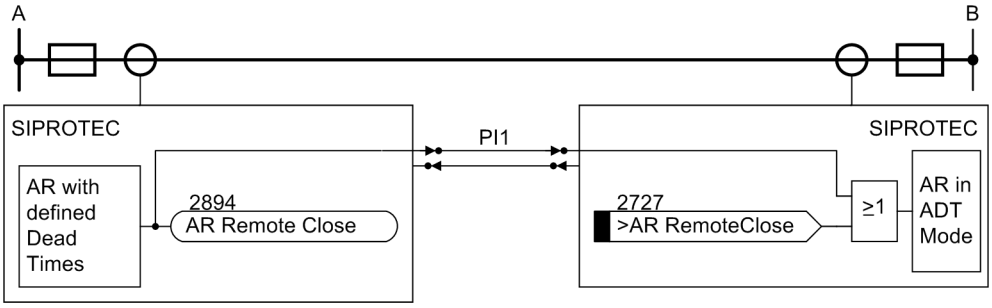

Figure 2-113 AR Remote-Close function via protection data interface

The close command can be transmitted by a teleprotection scheme using the protection data interfaces (ordering variant). When the indication „AR Remote Close“ is output, this information is transmitted at the same time to the remote end via the protection data interface. The information is ORed with the information of the binary input „>AR RemoteClose“ and made available to the automatic reclosure function. (Figure 2-113).

Connecting an External Auto-Reclosure Device

If the 7SA522 has to work with an external reclosure device, the binary inputs and outputs provided for this purpose must be taken into consideration. The following inputs and outputs are recommended:

Binary inputs:

383 „>Enable ARzones“	With this binary input, the external reclosure device controls stages of the individual short-circuit protection functions which are active before reclosure (e.g. overreaching zone in the distance protection). This input is not required if no overreaching stage is used (e.g. differential protection or comparison mode with distance protection, see also above margin heading „Selectivity before Reclosure“).
382 „>Only 1ph AR“	The external reclosure device is only programmed for 1 pole; the stages of the individual protection functions that are activated before reclosure via No 383 only do so in the case of 1-phase faults; in the event of multiple-phase faults these stages of the individual short-circuit protection functions do not operate. This input is not required if no overreaching stage is used (e.g. differential protection or comparison mode with distance protection, see also margin heading „Selectivity before reclosure“, above).
381 „>1p Trip Perm“	The external reclosure device allows 1-pole tripping (logic inversion or 3-pole coupling). If this input is not assigned or not routed (matrix), the protection functions trip 3-pole for all faults. If the external reclosure device cannot supply this signal but supplies a „3-pole coupling“ signal instead, this must be taken into account in the allocation of the binary inputs: the signal must be inverted in this case (L-active = active without voltage).

Binary outputs:

501 „Relay PICKUP“	Start of protection device, general (if required by external recloser device).
512 „Relay TRIP 1pL1“	Trip of the device 1-pole L1.
513 „Relay TRIP 1pL2“	Trip of the device 1-pole L2.
514 „Relay TRIP 1pL3“	Trip of the device 1-pole L3.
515 „Relay TRIP 3ph.“	Trip of the device 3-pole.

In order to obtain a phase-segregated trip indication, the respective 1-pole trip commands must be combined with the 3-pole trip command on one output.

Figure 2-114 for example, shows the interconnection between a 7SA522 and an external reclosure device with a mode selector switch.

Depending on the external reclosure device requirements, the three 1-pole indications (No. 512, 513, 514) can be combined to one „1-pole tripping“ output; No. 515 sends the „3-pole tripping“ signal to the external device.

In case of exclusively 3-pole reclose cycles, the general pickup signal (No. 501, if required by the external reclosure device) and trip signal (No. 511) of 7SA522 (see Figure 2-115) are usually sufficient.

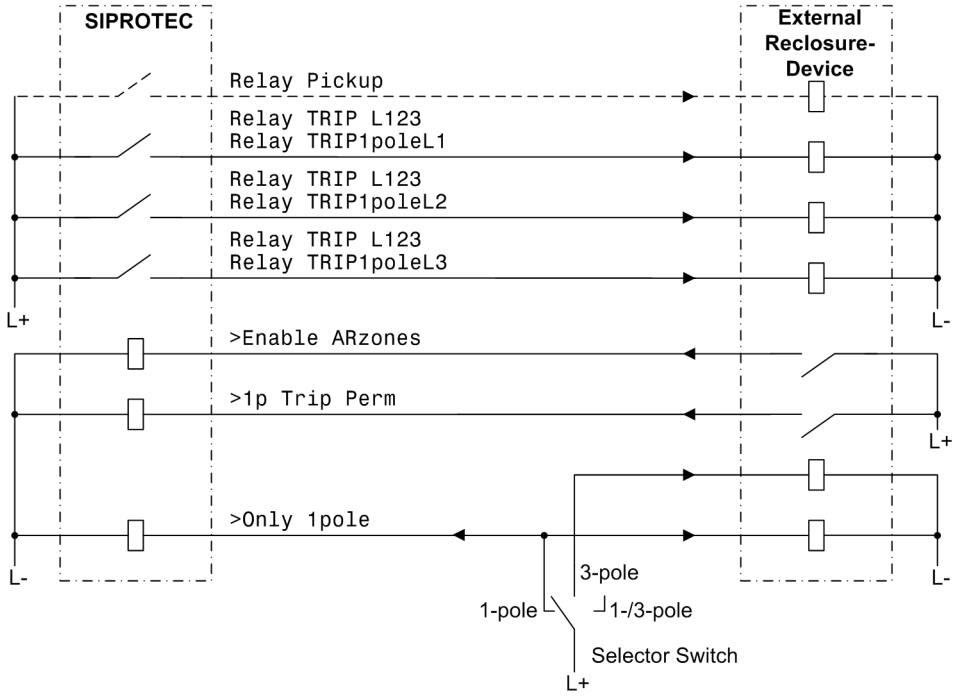

Figure 2-114 Connection example with external auto-reclosure device for 1-/3-pole AR with mode selector switch

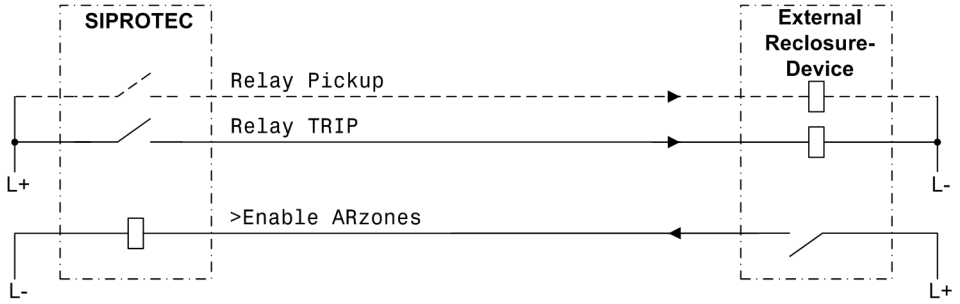

Figure 2-115 Connection example with external reclosure device for 3-pole AR

Control of the internal automatic reclosure by an external protection device

If the 7SA522 is equipped with the internal automatic reclosure function, this can also be controlled by an external protection device. This is of use, for example, on line ends with redundant protection or additional back-up protection when the second protection is used for the same line end and has to work with the automatic reclosure function integrated in the 7SA522.

The binary inputs and outputs provided for this functionality must be considered in this case. It must be decided whether the internal automatic reclosure function is to be controlled by the starting (pickup) or by the trip command of the external protection (see also above under „Control Mode of the Automatic Reclosure“).

If the automatic reclosure function is controlled by the **trip command**, the following inputs and outputs are recommended:

The automatic reclosure function is started via the Binary inputs:

2711 „>AR Start“	General fault detection for the automatic reclosure circuit (only required for action time),
2712 „>Trip L1 AR“	Trip command L1 for the automatic reclosure circuit,
2713 „>Trip L2 AR“	Trip command L2 for the automatic reclosure circuit,
2714 „>Trip L3 AR“	Trip command L3 for the automatic reclosure circuit.

The general pickup is decisive for starting the action times. It is also required if the automatic reclosing function has to detect sequential faults via pickup. In other cases, this input information is irrelevant.

The trip commands decide whether the dead time is activated for 1-pole or 3-pole reclose cycles or whether the reclosure is blocked in the event of a 3-pole trip (depending on the configured dead times).

Figure 2-116 shows the interconnection between the internal automatic reclosure function of the 7SA522 and an external protection device, as a connection example for 1-pole cylces.

To achieve 3-pole coupling of the external protection and to release, if necessary, its accelerated stages before reclosure, the following output functions are suitable:

2864 „AR 1p Trip Perm“	Internal automatic reclosure function ready for 1-pole reclose cycle, i.e. allows 1-pole tripping (logic inversion of the 3-pole coupling).
2889 „AR 1.CycZoneRel“	Internal automatic reclosure function ready for the first reclose cycle, i.e. releases the stage of the external protection device for reclosure, the corresponding outputs can be used for other cycles. This output can be omitted if the external protection does not require an overreaching stage (e.g. differential protection or comparison mode with distance protection).
2820 „AR Program1pole“	Internal automatic reclosure function is programmed for one pole, i.e. only recloses after 1-pole tripping. This output can be omitted if no overreaching stage is required (e.g. differential protection or comparison mode with distance protection).

Instead of the 3-phase-segregated trip commands, the 1-pole and 3-pole tripping may also be signalled to the internal automatic reclosure function - provided that the external protection device is capable of this -, i.e. assign the following binary inputs of the 7SA522:

2711 „>AR Start“	General fault detection for the internal automatic reclosure function (only required for action time),
2715 „>Trip 1pole AR“	Trip command 1-pole for the internal automatic reclosure function,
2716 „>Trip 3pole AR“	Trip command 3-pole for the internal automatic reclosure function.

If only 3-pole reclosure cycles are to be executed, it is sufficient to assign the binary input „>Trip 3pole AR“ (No. 2716) for the trip signal. Figure 2-117 shows an example. Any overreaching stages of the external protection are enabled again by „AR 1.CycZoneRel“ (No. 2889) and of further cycles, if applicable.

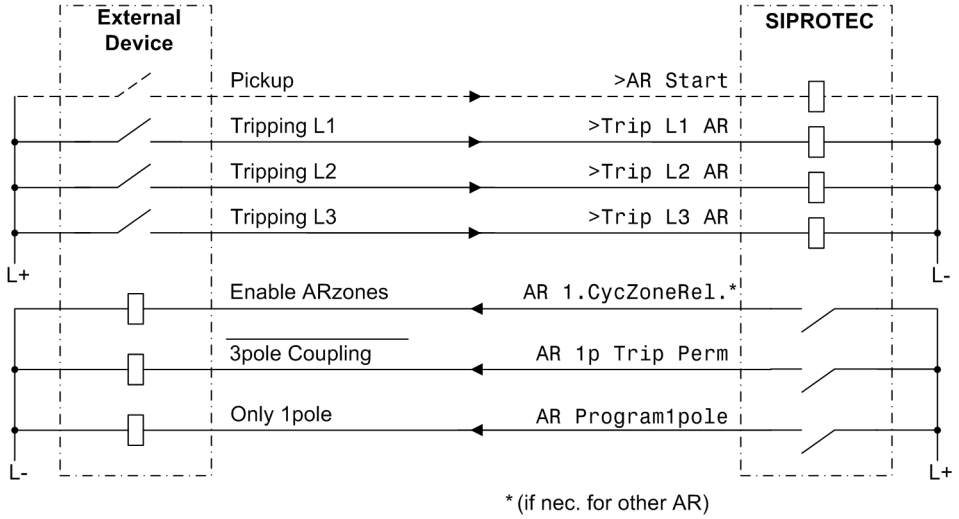

Figure 2-116 Connection example with external protection device for 1-/3-pole reclosure; AR control mode = with TRIP

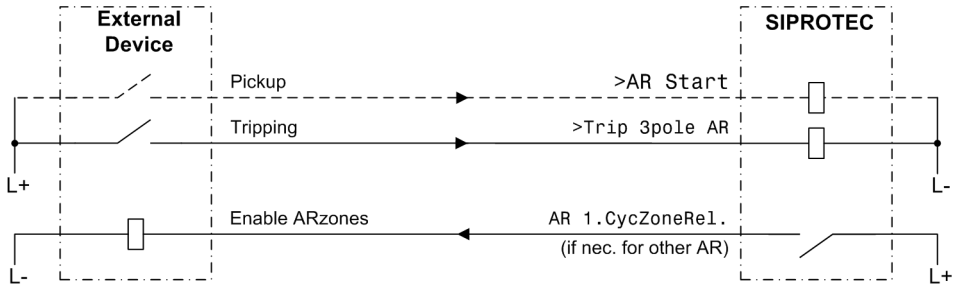

Figure 2-117 Connection example with external protection device for 3-pole reclosure; AR control mode = with TRIP

But if the internal automatic reclose function is controlled by the **pickup** (only possible for 3-pole tripping: 110 **Trip mode** = ***3pole only***), the phase-selective pickup signals of the external protection must be connected if distinction shall be made between different types of fault. The general trip command then suffices for tripping (No. 2746). Figure 2-118 shows a connection example.

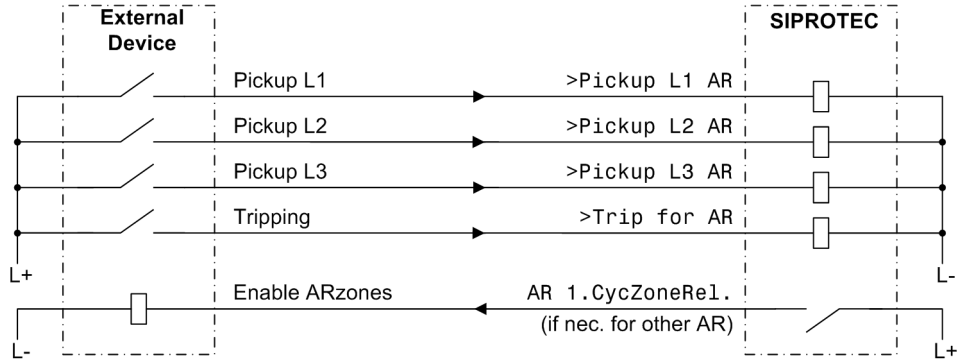

Starting Signal for each Phase

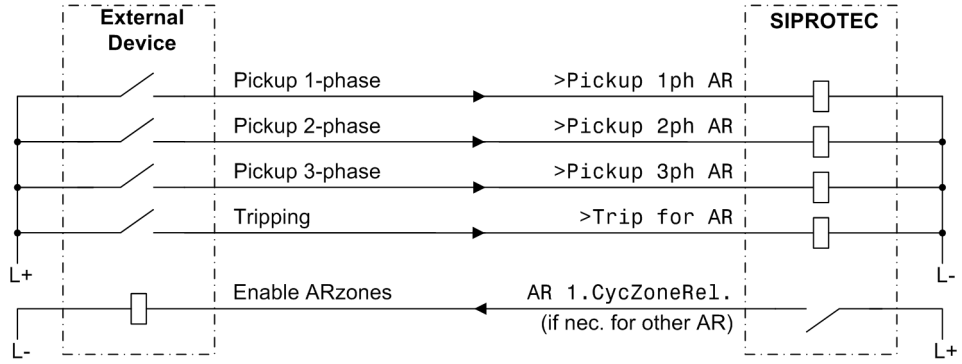

Starting Signal 1-phase, 2-phase and 3-phase

Figure 2-118 Connection example with external protection device for fault detection dependent dead time — dead time control by pickup signals of the protection device; AR control mode = with PICKUP

2 Protection Relays with 2 Automatic Reclosure Circuits

If redundant protection is provided for a line and each protection operates with its own automatic reclosure function, a certain signal exchange between the two combinations is necessary. The connection example in Figure 2-119 shows the necessary cross-connections.

If the auxiliary contacts of the circuit breaker are connected to the correct phases, a 3-pole coupling by the 7SA522 is ensured when more than one CB pole is tripped. This requires the activation of the forced 3-pole trip (see Section 2.13.2 at margin heading „Forced 3-pole trip“). An external automatic 3-pole coupling is therefore unnecessary if the above conditions are met. This prevents 2-pole tripping under all circumstances.

For the connection according to Figure 2-119 it must be considered that the cross connections to the second protection must be interrupted during the check of one of the two protection systems with protection monitoring equipment. This is done, for example, by means of a test switch installed in between.

Alternatively, the variant with a minimum cross connection according to Figure 2-120 can be applied. In this case, the following information should be considered:

- The switching state of the circuit breaker must be connected in a phase-selective way via the auxiliary contacts to the corresponding binary inputs of both protection systems in case of a 1-pole reclosure. If only 3-pole tripping is possible, the 3-pole status is sufficient.
- In order to prevent that a very quick response (1-pole) of a protection leads to an undesired 3-pole coupling of a second protection, a „software filter time“ for the binary inputs of the auxiliary contacts is to be set (refer to Figure 2-121).

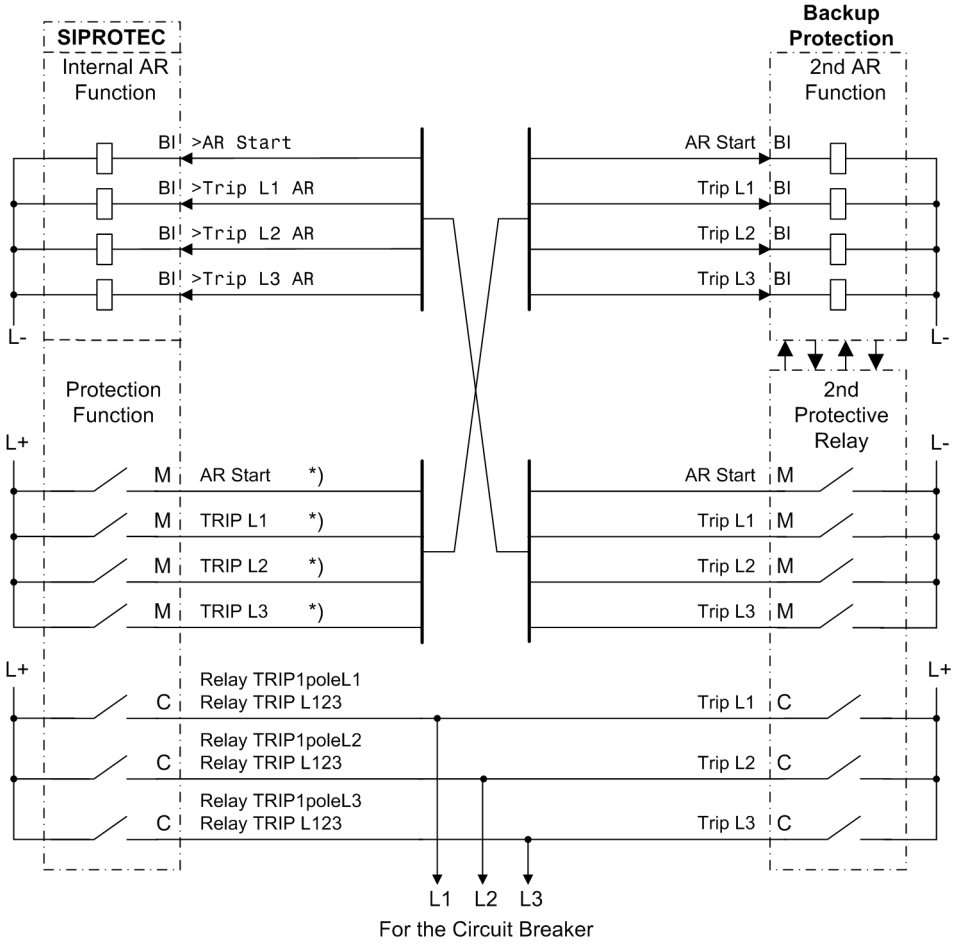

Figure 2-119 Connection example for 2 protection devices with 2 automatic reclosure functions

BI Binary inputs

M Signal output

K Command

*) for all protection functions operating with AR.

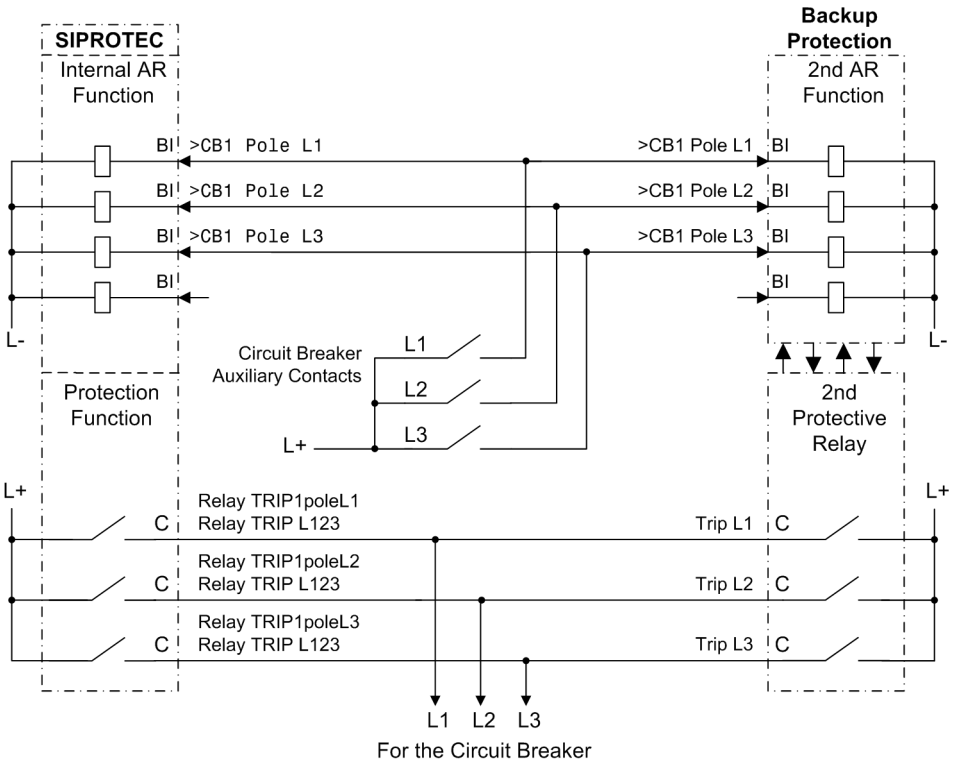

Figure 2-120 Connection example for 2 protection devices with internal automatic reclosure function and minimum cross connection

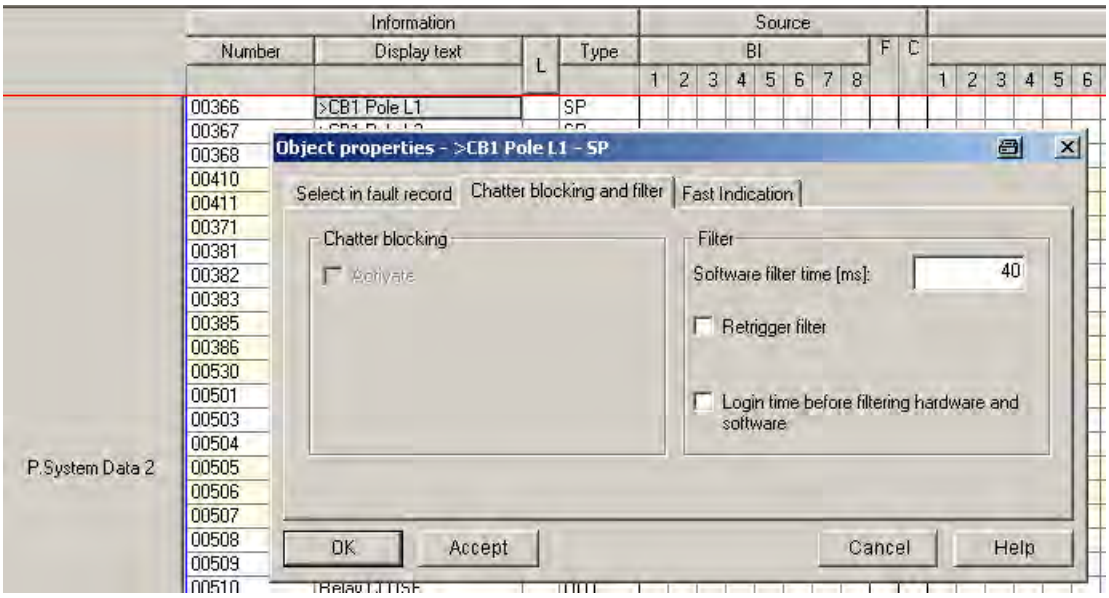

Figure 2-121 Setting of the software filter time

2.13.2 Setting Notes

General

If no reclosure is required on the feeder to which the 7SA522 distance protection is applied (e.g. for cables, transformers, motors or similar), the automatic reclosure function must be inhibited during configuration of the device (see Section 2.1.1.2, address 133). The automatic reclosure function is then fully disabled, i.e. the automatic reclosure is not processed in the 7SA522. No signals regarding the automatic reclosure function are generated, and the binary inputs for the automatic reclosure function are ignored. All settings of the automatic reclosure function are inaccessible and of no significance.

But if the internal automatic reclosure function is to be used, the type of reclosure must be selected during the configuration of the device functions (see Section 2.1.1.2) in address 133 **Auto Reclose** and in address 134 the **AR control mode**.

Up to 8 reclosure attempts are allowed with the integrated automatic reclosure function in the 7SA522. Whereas the settings in address 3401 to 3441 are common to all reclosure cycles, the individual settings of the cycles are made from address 3450 onwards. It is possible to set different individual parameters for the first four reclose cycles. From the fifth cycle on the parameters for the fourth cycle apply.

The automatic reclosing function can be turned ***ON*** or ***OFF*** under address 3401 **AUTO RECLOSE**.

A prerequisite for automatic reclosure taking place after a trip due to a short-circuit is that the circuit breaker is ready for at least one OPEN-CLOSE-OPEN cycle at the time the automatic reclosure circuit is started, i.e. at the time of the first trip command. The readiness of the circuit breaker is signalled to the device via the binary input „>CB1 Ready“ (No. 371). If no such signal is available, leave the setting under address 3402 **CB? 1.TRIP** = ***NO*** because no automatic reclosure would be possible at all otherwise. If circuit breaker interrogation is possible, you should set **CB? 1.TRIP** = ***YES***.

Furthermore, the circuit breaker ready state can also be interrogated prior to every reclosure. This is set when setting the individual reclose cycles (see below).

To check that the ready status of the circuit breaker is regained during the dead times, you can set a circuit breaker ready monitoring time under address 3409 **CB TIME OUT**. The time is set slightly longer than the recovery time of the circuit breaker after an OPEN-CLOSE-OPEN cycle. If the circuit breaker is not ready again by the time this timer expires, no reclosure takes place and the automatic reclosure function is blocked dynamically.

Waiting for the circuit breaker to be ready can cause an increase of the dead times. Interrogation of a synchronism check (if used) can also delay reclosure. To avoid uncontrolled prolongation, it is possible to set a maximum prolongation of the dead time in this case in address 3411 **T-DEAD EXT.**. This prolongation is unlimited if the setting ∞ is applied. This parameter can only be altered in DIGSI at **Display Additional Settings**. Remember that longer dead times are only permissible after 3-pole tripping when no stability problems occur or a synchronism check takes place before reclosure.

T-RECLAIM (address 3403) is the time after which the fault is considered eliminated following successful reclosure. If a protection function provokes a new trip before this time has elapsed, the next reclosing cycle is started in case of multiple reclosure. If no further reclosing attempt is allowed, the last reclosure will be considered failed in the event of a new trip. The reclaim time must therefore be longer than the longest response time of a protection function which can start the automatic reclosure function. When operating the AR in ADT mode, it is possible to deactivate the reclaim time by setting it to 0 s.

A few seconds are generally sufficient. In areas with frequent thunderstorms or storms, a shorter blocking time may be necessary to avoid feeder lockout due to sequential lightning strikes or cable flashovers.

A longer reclaim time should be chosen where circuit breaker supervision is not possible (see above) during multiple reclosures, e.g. because of missing auxiliary contacts and information on the circuit breaker ready status. In this case, the reclaim time should be longer than the time required for the circuit breaker mechanism to be ready.

The blocking duration following manual-close detection **T-BLOCK MC** (address 3404) must ensure the circuit breaker to open and close reliably (0.5 s to 1 s). If a fault is detected by a protection function within this time after closing of the circuit breaker was detected, no reclosure takes place and a final 3-pole trip command is issued. If this is not desired, address 3404 is set to **0**.

The options for handling evolving faults are described in Section 2.13 under margin heading „Handling Evolving Faults“. The treatment of sequential faults is not necessary on line ends where the adaptive dead time is applied (address 133 **Auto Reclose** = ***ADT***). The addresses 3406 and 3407 are then of no consequence and therefore not accessible.

The detection of an evolving fault can be defined under address 3406 **EV. FLT. RECOG.**. **EV. FLT. RECOG.** ***with PICKUP*** means that, during a dead time, every **pickup** of a protection function will be interpreted as an evolving fault. With **EV. FLT. RECOG.** ***with TRIP*** a fault during a dead time is only interpreted as an evolving fault if it has led to a **trip command** by a protection function. This may also include trip commands which are received from an external device via a binary input or which have been transmitted from another end of the protected object. If an external protection device operates together with the internal auto-reclosure, evolving fault detection with pickup presupposes that a pickup signal from the external device is also connected to the 7SA522; otherwise an evolving fault can only be detected with the external trip command even if ***with PICKUP*** was set here.

The reaction in response to sequential faults can be selected at address 3407. **EV. FLT. MODE** ***blocks AR*** means that no reclosure is performed after detection of a sequential fault. This is always useful when only 1-pole reclosure is to take place or when stability problems are expected due to the subsequent 3-pole dead time. If a 3-pole reclose cycle is to be initiated by tripping of the sequential fault, set **EV. FLT. MODE** = ***starts 3p AR***. In this case a separately adjustable 3-pole dead time is started with the 3-pole trip command due to the sequential fault. This is only useful if 3-pole reclosure is also permitted.

Address 3408 **T-Start MONITOR** monitors the reaction of the circuit breaker after a trip command. If the CB has not opened during this time (from the beginning of the trip command), the automatic reclosure is blocked dynamically. The criterion for circuit breaker opening is the position of the circuit breaker auxiliary contact or the disappearance of the trip command. If a circuit breaker failure protection (internal or external) is used on the feeder, this time should be shorter than the delay time of the circuit breaker failure protection so that no reclosure takes place if the circuit breaker fails.

Note

If the circuit breaker failure protection (BF) should perform a 1-pole TRIP repetition, the time setting of parameter 3408 **T-Start MONITOR** must be longer than the time set for parameter 3903 **1p-RETRIP (T1)**.

To enable that the busbar is tripped by the circuit breaker failure protection without preceding 3-pole coupling of the trip command (by AR or BF), the time set for 3408 **T-Start MONITOR** also has to be longer than the time set for 3906 **T2**. In this case, the AR must be blocked by a signal from the BF to prevent the AR from reclosing after a busbar TRIP. It is recommended to connect the signal 1494 „BF T2-TRIP(bus)“ to the AR input 2703 „>AR block“ by means of CFC.

If the reclosure command is transmitted to the opposite end, this transmission can be delayed by the time setting in address 3410 **T RemoteClose**. This transmission is only possible if the device operates with adaptive dead time at the remote end (address 133 **Auto Reclose** = ***ADT***). This parameter is otherwise irrelevant. On the one hand, this delay serves to prevent the remote end device from reclosing unnecessarily when local reclosure is unsuccessful. On the other hand, it should be noted that the line is not available for energy transport until the remote end has also closed. Therefore this delay must be added to the dead time for consideration of the network stability.

Configuration of auto-reclosure

This configuration concerns the interaction between the protection and supplementary functions of the device and the automatic reclosure function. Here, you can determine which functions of the device should start the automatic reclosure and which not.

Address 3420	AR w/ DIST., i.e. with distance protection
Address 3421	AR w/ SOTF-O/C, i.e. with high-current fast tripping
Address 3422	AR w/ W/I, i.e. with weak–infeed trip function
Address 3423	AR w/ EF-O/C, i.e. with transfer trip and remote trip
Address 3424	AR w/ DTT, i.e. with externally fed trip command
Address 3425	AR w/ BackUpO/C, i.e. with time overcurrent protection

For the functions which should start the auto-reclosure function, the corresponding address is set to ***YES***, for the others to ***NO***. The other functions cannot start the automatic reclosure because reclosure is not reasonable here.

Forced 3-pole trip

If a blocking of the auto-reclosure occurs during the dead time of a 1-pole cycle without a previous 3-pole trip command, the circuit breaker remains open at one pole. With address 3430 **AR TRIP 3pole** it is possible to determine that the tripping logic of the device issues a 3-pole trip command in this case (pole discrepancy prevention for the CB poles). Set this address to ***YES*** if the CB can be tripped 1-pole and if it has no pole discrepancy protection. Nevertheless, the device pre-empts the pole discrepancy supervision of the CB because the forced 3-pole trip of the device is immediately initiated as soon as the reclosure is blocked following a 1-pole trip or if the CB auxiliary contacts report an implausible circuit breaker state (see also Section 2.13 at margin heading „Processing the circuit breaker auxiliary contacts“). The forced 3-pole trip is also activated when only 3-pole cycles are allowed, but a 1-pole trip is signalled externally via a binary input.

The forced 3-pole trip is unnecessary if only a common 3-pole control of the CB is possible.

Dead line check / reduced dead time

Under address 3431 the dead line check or the reduced dead time function can be activated. Either the one or the other can be used as the two options are contradictory. The voltage transformers must be connected to the line side of the circuit breaker if either of these modes is to be used. If this is not the case or if neither of the two functions is used, set **DLC or RDT** = ***WITHOUT***. If the adaptive dead time is used (see below), the parameters mentioned here are omitted because the adaptive dead time implies the properties of the reduced dead time.

DLC or RDT = ***DLC*** means that the dead line check of the line voltage is used. It only allows reclosing after it has been verified in advance that the line is dead. In this case, the phase-to-earth voltage limit is set in address 3441 **U-dead<** below which the line is considered voltage-free (disconnected). The setting is applied in volts secondary. This value can be entered as a primary value when parameterising with a PC and DIGSI. Address 3438 **T U-stable** determines the measuring time available for determining the no-voltage condition. Address 3440 is irrelevant here.

DLC or RDT = ***RDT*** means that the reduced dead time is used. This is described in detail in Section 2.13 at margin heading „Reduced Dead Time (RDT)“. In this case the setting under address 3440 **U-live>** determines the phase-to-earth limit voltage above which the line is considered to be fault-free. The setting must be smaller than the lowest expected operating voltage. The setting is applied in volts secondary. This value can be entered as a primary value when parameterising with a PC and DIGSI. Address 3438 **T U-stable** defines the measuring time used to determine the voltage. It should be longer than any transient oscillations resulting from line energization. Address 3441 is irrelevant here.

Adaptive dead time (ADT)

When operating with adaptive dead time, it must be ensured in advance that **one** end per line operates with defined dead times and has an infeed. The other (or the others in multi-branch lines) may operate with adaptive dead time. It is essential that the voltage transformers are located on the line side of the circuit breaker. Details about this function can be found in Section 2.13 at margin heading „Adaptive Dead Time (ADT) and Close Command-transfer (Remote-CLOSE)“.

For the line end with defined dead times the number of desired reclose cycles must be set during the configuration of the protection functions (Section 2.1.1) in address 133 **Auto Reclose**. For the devices operating with adaptive dead time **Auto Reclose** = ***ADT*** must be set during the configuration of the protection functions under address 133. Only the parameters described below are interrogated in the latter case. No settings are then made for the individual reclosure cycles. The adaptive dead time implies functionality of reduced dead time.

The adaptive dead time may be voltage-controlled or Remote–CLOSE–controlled. Both are possible at the same time. In the first case, reclosure takes place as soon as the returning voltage, after reclosure at the remote end, is detected. For this purpose the device must be connected to voltage transformers located on the line side. In the case of Remote-CLOSE, the autoreclosure waits until the Remote-CLOSE command is received from the remote end.

The action time **T-ACTION ADT** (address 3433) is started after any protection function has triggered the automatic reclosing function. The trip command must occur during this time. If no trip command is issued until the action time has expired, reclosing will not be initiated. Depending on the configuration of the protection functions (see Section 2.1.1.2), the action time may also be omitted; this applies especially when an initiating protection function has no fault detection signal.

The dead times are determined by the reclosure command of the device at the line end with the defined dead times. In cases where this reclosure command does not appear, e.g. because the reclosure was in the meantime blocked at this end, the readiness of the local device must return to the quiescent state at some time. This takes place after the maximum wait time **T-MAX ADT** (address 3434). It must be long enough to include the last reclosure of the remote end. In the case of single-shot reclosing, the sum of the maximum dead time plus reclaim time of the other device is sufficient. In the case of multiple reclosure, the worst case is that all reclosures of the other end except the last one are unsuccessful. The time of all these cycles must be taken into account. To save having to make exact calculations, it is possible to use the sum of all dead times and all protection operating times plus one reclaim time.

Under address 3435 **ADT 1p allowed** it can be determined whether 1-pole tripping is allowed (provided that 1-pole tripping is possible). If ***NO***, the protection trips 3-pole for all fault types. If ***YES***, the actual trip signal of the starting protection functions is decisive. If the reclaim time is unequal to 0 s and 1-pole tripping is allowed, 1-pole tripping will be prevented during the reclaim time. Each fault is thus disconnected in three poles while the reclaim time is active.

Address 3403 **T-RECLAIM** allows disabling the reclaim time in ADT mode. In doing so, the ADT cycle including its settings and release conditions is restarted after unsuccessful automatic reclosing. If the reclaim time is activated, the 1-pole trip permission at address 3435 and the protection releases are disabled while the reclaim time is running.

Under address 3436 **ADT CB? CLOSE** it can be determined whether circuit breaker ready is interrogated before reclosure after an adaptive dead time. With the setting ***YES***, the dead time may be extended if the circuit breaker is not ready for a CLOSE–OPEN–cycle when the dead time expires. The maximum extension that is possible is the circuit breaker monitoring time; this was set for all reclosure cycles under address 3409 (see above). Details about the circuit breaker monitoring can be found in the function description, Section 2.13, at margin heading „Interrogation of the Circuit Breaker Ready State“.

If there is a danger of stability problems in the network during a 3-pole reclosure cycle, set address 3437 **ADT SynRequest** to ***YES***. In this case a check is made before reclosure following a 3-pole trip whether the voltages of feeder and busbar are sufficiently synchronous. This is only done on condition that either the internal synchronism and voltage check functions are available, or that an external device is available for synchronism and voltage check. If only 1-pole reclose cycles are executed or if no stability problems are expected during 3-pole dead times (e.g. due to closely meshed networks or in radial networks), set address 3437 to ***NO***.

Addresses 3438 and 3440 are only significant if the voltage-controlled adaptive dead time is used. 3440 **U-live>** is the phase-to-earth voltage limit above which the line is considered to be fault-free. The setting must be smaller than the lowest expected operating voltage. The setting is applied in volts secondary. This value can be entered as a primary value when parameterising with a PC and DIGSI. Address 3438 **T U-stable** defines the measuring time used to determine the voltage. It should be longer than any transient oscillations resulting from line energization.

1st Reclose Cycle

If working on a line with adaptive dead time, no further parameters are needed for the individual reclose cycles in this case. All the following parameters assigned to the individual cycles are then superfluous and inaccessible.

Address 3450 **1.AR: START** is only available if the automatic reclosure is configured with action time in the operating mode, i. e. if during configuration of the protection functions (see Section 2.1.1.2) address 134 **AR control mode** = ***Pickup w/ Tact*** or ***Trip w/ Tact*** was set (the first setting only applies to 3-pole tripping). It determines whether automatic reclosure should be started at all with the first cycle. This address is included mainly due to the uniformity of the parameters for every reclosure attempt and is set to ***YES*** for the first cycle. If several cycles are performed, you can (at **AR control mode** = ***Pickup ...***) set this parameter and different action times to control the effectiveness of the individual cycles. Notes and examples are listed in Section 2.13 at margin heading „Action times“.

The action time **1.AR: T-ACTION** (address 3451) is started after a protection function has triggered the automatic reclosing function. The trip command must occur during this time. If no trip command is issued until the action time has expired, reclosing will not be initiated. Depending on the configuration of the protection functions, the action time may also be omitted; this applies especially when an initiating protection function has no fault detection signal.

Depending on the configured operating mode of the automatic reclosure (address 134 **AR control mode**) only address 3456 and 3457 (if **AR control mode** = ***with TRIP...***) are available or address 3453 to 3455 (if **AR control mode** = ***with PICKUP ...***).

In **AR control mode** = ***with TRIP ...*** you can set different dead times for 1-pole and 3-pole reclose cycles. Whether 1-pole or 3-pole tripping is triggered depends solely on the initiating protection functions. 1-pole tripping is of course only possible if the device and the corresponding protection function are also capable of 1-pole tripping:

Table 2-7 AR control mode = **with TRIP...**

3456	1.AR Tdead1Trip	is the dead time after 1-pole tripping,
3457	1.AR Tdead3Trip	is the dead time after 3-pole tripping.

If you only want to allow a 1-pole reclose cycle, set the dead time for 3-pole tripping to ∞. If you only want to allow a 3-pole reclose cycle, set the dead time for 1-pole tripping to ∞, the protection then trips 3-pole for each fault type.

The dead time after 1-pole tripping (if set) **1.AR Tdead1Trip** (address 3456) should be long enough for the short-circuit arc to be extinguished and the surrounding air to be de-ionized so that the reclosure promises to be successful. The longer the line, the longer is this time due to the charging of the conductor capacitances. Usual values are 0.9 s to 1.5 s.

For 3-pole tripping (address 3457 **1.AR Tdead3Trip**) the network stability is the main concern. Since the disconnected line cannot transfer any synchronising forces, only a short dead time is often permitted. Usual values are 0.3 s to 0.6 s. If the device is operating with a synchronism check (compare Section 2.14), a longer time may be tolerated under certain circumstances. Longer 3-pole dead times are also possible in radial networks.

For **AR control mode** = ***with PICKUP ...*** it is possible to make the dead times dependent on the type of fault detected by the initiating protection function(s).

Table 2-8 AR control mode = **with PICKUP ...**

3453	1.AR Tdead 1Flt	is the dead time after 1-phase pickup,
3454	1.AR Tdead 2Flt	is the dead time after 2-phase pickup,
3455	1.AR Tdead 3Flt	is the dead time after 3-phase pickup.

If the dead time is to be the same for all fault types, set all three parameters the same. Note that these settings only cause different dead times for different pickups. The tripping can only be 3-pole.

If, when setting the reaction to sequential faults (see above at „General“), you have set address 3407 **EV. FLT. MODE** ***starts 3p AR***, you can set a separate dead time for the 3-pole dead time after clearance of the sequential fault **1.AR: Tdead EV.** (address 3458). Stability aspects are also decisive here. Normally the setting constraints are similar to address 3457 **1.AR Tdead3Trip**.

Under address 3459 **1.AR: CB? CLOSE** it can be determined whether the readiness of the circuit breaker ("circuit breaker ready") is interrogated before this first reclosure. With the setting ***YES***, the dead time may be extended if the circuit breaker is not ready for a CLOSE–TRIP–cycle when the dead time expires. The maximum extension that is possible is the circuit breaker monitoring time; this time was set for all reclosure cycles under address 3409 **CB TIME OUT** (see above). Details about the circuit breaker monitoring can be found in the function description, Section 2.13, at margin heading „Interrogation of the Circuit Breaker Ready State“.

If there is a danger of stability problems in the network during a 3-pole reclosure cycle, you should set address 3460 **1.AR SynRequest** to ***YES***. In this case, it is verified before each reclosure following a 3-pole trip whether the voltages of feeder and busbar are sufficiently synchronous. This is only done on condition that either the internal synchronism and voltage check functions are available, or that an external device is available for synchronism and voltage check. If only 1-pole reclose cycles are executed or if no stability problems are expected during 3-pole dead times (e.g. due to closely meshed networks or in radial networks), set address 3460 to ***NO***.

2nd to 4th Reclose Cycle

If several cycles have been set in the configuration of the scope of protection functions, you can set individual reclosure parameters for the 2nd to 4th cycles. The same options are available as for the first cycle. Again, only some of the parameters shown below will be available depending on the selections made during configuration of the scope of protection functions.

For the 2nd cycle:

3461	2.AR: START	Start in 2nd cycle generally allowed
3462	2.AR: T-ACTION	Action time for the 2nd cycle
3464	2.AR Tdead 1Flt	Dead time after 1-phase pickup
3465	2.AR Tdead 2Flt	Dead time after 2-phase pickup
3466	2.AR Tdead 3Flt	Dead time after 3-phase pickup
3467	2.AR Tdead1Trip	Dead time after 1-pole tripping
3468	2.AR Tdead3Trip	Dead time after 3-pole tripping
3469	2.AR: Tdead EV.	Dead time after evolving fault
3470	2.AR: CB? CLOSE	CB ready interrogation before reclosing
3471	2.AR SynRequest	Sync. check after 3-pole tripping

For the 3rd cycle:

3472	3.AR: START	Start in 3rd cycle generally allowed
3473	3.AR: T-ACTION	Action time for the 3rd cycle
3475	3.AR Tdead 1Flt	Dead time after 1-phase pickup
3476	3.AR Tdead 2Flt	Dead time after 2-phase pickup
3477	3.AR Tdead 3Flt	Dead time after 3-phase pickup
3478	3.AR Tdead1Trip	Dead time after 1-pole tripping
3479	3.AR Tdead3Trip	Dead time after 3-pole tripping
3480	3.AR: Tdead EV.	Dead time after evolving fault
3481	3.AR: CB? CLOSE	CB ready interrogation before reclosing
3482	3.AR SynRequest	Sync. check after 3-pole tripping

For the 4th cycle:

3483	4.AR: START	Start in 4th cycle generally allowed
3484	4.AR: T-ACTION	Action time for the 4th cycle
3486	4.AR Tdead 1Flt	Dead time after 1-phase pickup
3487	4.AR Tdead 2Flt	Dead time after 2-phase pickup
3488	4.AR Tdead 3Flt	Dead time after 3-phase pickup
3489	4.AR Tdead1Trip	Dead time after 1-pole tripping
3490	4.AR Tdead3Trip	Dead time after 3-pole tripping
3491	4.AR: Tdead EV.	Dead time after evolving fault
3492	4.AR: CB? CLOSE	CB ready interrogation before reclosing
3493	4.AR SynRequest	Sync. check after 3-pole tripping

5th to 8th Reclose Cycle

If more than four cycles were set during configuration of the functional scope, the dead times preceding the fifth (5th) through the ninth (9th) reclosing attempts are equal to the open circuit breaker time which precedes the fourth (4th) reclosing attempt.

Notes on the Information Overview

The most important information about automatic reclosure is briefly explained insofar as it was not mentioned in the following lists or described in detail in the preceding text.

„>BLK 1.AR-cycle“ (No. 2742) to „>BLK 4.-n. AR“ (No. 2745)

The respective auto-reclose cycle is blocked. If the blocking state already exists when the automatic reclosure function is initiated, the blocked cycle is not executed and may be skipped (if other cycles are permitted). The same applies if the automatic reclosure function is started (running), but not internally blocked. If the block signal of a cycle appears while this cycle is being executed (in progress), the automatic reclosure function is blocked dynamically; no further automatic reclosures cycles are then executed.

„AR 1.CycZoneRel“ (No. 2889) to „AR 4.CycZoneRel“ (No. 2892)

The automatic reclosure is ready for the respective reclosure cycle. This information indicates which cycle will be run next. For example, external protection functions can use this information to release accelerated or over-reaching trip stages prior to the corresponding reclose cycle.

„AR is blocked“ (No. 2783)

The automatic reclosure is blocked (e.g. circuit breaker not ready). This information indicates to the operational information system that in the event of an upcoming system fault there will be a final trip, i.e. without reclosure. If the automatic reclosure has been started, this information does not appear.

„AR not ready“ (No. 2784)

The automatic reclosure is not ready for reclosure at the moment. In addition to the „AR is blocked“ (No. 2783) mentioned above there are also obstructions during the course of the auto-reclosure cycles such as „action time run out“ or „last reclaim time running“. This information is particularly helpful during testing because no protection test cycle with reclosure may be initiated during this state.

„AR in progress“ (No. 2801)

This information appears following the start of the automatic reclosure function, i.e. with the first trip command that can start the automatic reclosure function. If this reclosure was successful (or any in the case of multiple cycles), the information is reset with the expiry of the last reclaim time. If no reclosure was successful or if reclosure was blocked, it ends with the last – the final – trip command.

„AR Sync.Request“ (No. 2865)

Measuring request to an external synchronism check device. The information appears at the end of a dead time subsequent to 3-pole tripping if a synchronism request was parameterised for the corresponding cycle. Reclosure only takes place when the synchronism check device has provided the release signal „>Sync.release“ (No. 2731).

„>Sync.release“ (No. 2731)

Release of reclosure by an external synchronism check device if this was requested by the output information „AR Sync.Request“ (No. 2865).

2.13.3 Settings

Addresses which have an appended "A" can only be changed with DIGSI, under Additional Settings.

Addr.	Parameter	Setting Options	Default Setting	Comments
3401	AUTO RECLOSE	OFF ON	ON	Auto-Reclose function
3402	CB? 1.TRIP	YES NO	NO	CB ready interrogation at 1st trip
3403	T-RECLAIM	0.50 .. 300.00 sec	3.00 sec	Reclaim time after successful AR cycle
3403	T-RECLAIM	0.50 .. 300.00 sec; 0	3.00 sec	Reclaim time after successful AR cycle
3404	T-BLOCK MC	0.50 .. 300.00 sec; 0	1.00 sec	AR blocking duration after manual close
3406	EV. FLT. RECOG.	with PICKUP with TRIP	with TRIP	Evolving fault recognition
3407	EV. FLT. MODE	blocks AR starts 3p AR	starts 3p AR	Evolving fault (during the dead time)
3408	T-Start MONITOR	0.01 .. 300.00 sec	0.20 sec	AR start-signal monitoring time
3409	CB TIME OUT	0.01 .. 300.00 sec	3.00 sec	Circuit Breaker (CB) Supervision Time
3410	T RemoteClose	0.00 .. 300.00 sec; ∞	∞ sec	Send delay for remote close command
3411A	T-DEAD EXT.	0.50 .. 300.00 sec; ∞	∞ sec	Maximum dead time extension
3420	AR w/ DIST.	YES NO	YES	AR with distance protection
3421	AR w/ SOTF-O/C	YES NO	YES	AR with switch-onto-fault overcurrent
3422	AR w/ W/I	YES NO	YES	AR with weak infeed tripping
3423	AR w/ EF-O/C	YES NO	YES	AR with earth fault overcurrent prot.
3424	AR w/ DTT	YES NO	YES	AR with direct transfer trip
3425	AR w/ BackUpO/C	YES NO	YES	AR with back-up overcurrent
3430	AR TRIP 3pole	YES NO	YES	3pole TRIP by AR
3431	DLC or RDT	WITHOUT RDT DLC	WITHOUT	Dead Line Check or Reduced Dead Time
3433	T-ACTION ADT	0.01 .. 300.00 sec; ∞	0.20 sec	Action time
3434	T-MAX ADT	0.50 .. 3000.00 sec	5.00 sec	Maximum dead time
3435	ADT 1p allowed	YES NO	NO	1pole TRIP allowed

Addr.	Parameter	Setting Options	Default Setting	Comments
3436	ADT CB? CLOSE	YES NO	NO	CB ready interrogation before re-closing
3437	ADT SynRequest	YES NO	NO	Request for synchro-check after 3pole AR
3438	T U-stable	0.10 .. 30.00 sec	0.10 sec	Supervision time for dead/ live voltage
3440	U-live>	30 .. 90 V	48 V	Voltage threshold for live line or bus
3441	U-dead<	2 .. 70 V	30 V	Voltage threshold for dead line or bus
3450	1.AR: START	YES NO	YES	Start of AR allowed in this cycle
3451	1.AR: T-ACTION	0.01 .. 300.00 sec; ∞	0.20 sec	Action time
3453	1.AR Tdead 1Flt	0.01 .. 1800.00 sec; ∞	1.20 sec	Dead time after 1phase faults
3454	1.AR Tdead 2Flt	0.01 .. 1800.00 sec; ∞	1.20 sec	Dead time after 2phase faults
3455	1.AR Tdead 3Flt	0.01 .. 1800.00 sec; ∞	0.50 sec	Dead time after 3phase faults
3456	1.AR Tdead1Trip	0.01 .. 1800.00 sec; ∞	1.20 sec	Dead time after 1pole trip
3457	1.AR Tdead3Trip	0.01 .. 1800.00 sec; ∞	0.50 sec	Dead time after 3pole trip
3458	1.AR: Tdead EV.	0.01 .. 1800.00 sec	1.20 sec	Dead time after evolving fault
3459	1.AR: CB? CLOSE	YES NO	NO	CB ready interrogation before re-closing
3460	1.AR SynRequest	YES NO	NO	Request for synchro-check after 3pole AR
3461	2.AR: START	YES NO	NO	AR start allowed in this cycle
3462	2.AR: T-ACTION	0.01 .. 300.00 sec; ∞	0.20 sec	Action time
3464	2.AR Tdead 1Flt	0.01 .. 1800.00 sec; ∞	1.20 sec	Dead time after 1phase faults
3465	2.AR Tdead 2Flt	0.01 .. 1800.00 sec; ∞	1.20 sec	Dead time after 2phase faults
3466	2.AR Tdead 3Flt	0.01 .. 1800.00 sec; ∞	0.50 sec	Dead time after 3phase faults
3467	2.AR Tdead1Trip	0.01 .. 1800.00 sec; ∞	∞ sec	Dead time after 1pole trip
3468	2.AR Tdead3Trip	0.01 .. 1800.00 sec; ∞	0.50 sec	Dead time after 3pole trip
3469	2.AR: Tdead EV.	0.01 .. 1800.00 sec	1.20 sec	Dead time after evolving fault
3470	2.AR: CB? CLOSE	YES NO	NO	CB ready interrogation before re-closing
3471	2.AR SynRequest	YES NO	NO	Request for synchro-check after 3pole AR
3472	3.AR: START	YES NO	NO	AR start allowed in this cycle
3473	3.AR: T-ACTION	0.01 .. 300.00 sec; ∞	0.20 sec	Action time
3475	3.AR Tdead 1Flt	0.01 .. 1800.00 sec; ∞	1.20 sec	Dead time after 1phase faults
3476	3.AR Tdead 2Flt	0.01 .. 1800.00 sec; ∞	1.20 sec	Dead time after 2phase faults
3477	3.AR Tdead 3Flt	0.01 .. 1800.00 sec; ∞	0.50 sec	Dead time after 3phase faults

Addr.	Parameter	Setting Options	Default Setting	Comments
3478	3.AR Tdead1Trip	0.01 .. 1800.00 sec; ∞	∞ sec	Dead time after 1pole trip
3479	3.AR Tdead3Trip	0.01 .. 1800.00 sec; ∞	0.50 sec	Dead time after 3pole trip
3480	3.AR: Tdead EV.	0.01 .. 1800.00 sec	1.20 sec	Dead time after evolving fault
3481	3.AR: CB? CLOSE	YES NO	NO	CB ready interrogation before re-closing
3482	3.AR SynRequest	YES NO	NO	Request for synchro-check after 3pole AR
3483	4.AR: START	YES NO	NO	AR start allowed in this cycle
3484	4.AR: T-ACTION	0.01 .. 300.00 sec; ∞	0.20 sec	Action time
3486	4.AR Tdead 1Flt	0.01 .. 1800.00 sec; ∞	1.20 sec	Dead time after 1phase faults
3487	4.AR Tdead 2Flt	0.01 .. 1800.00 sec; ∞	1.20 sec	Dead time after 2phase faults
3488	4.AR Tdead 3Flt	0.01 .. 1800.00 sec; ∞	0.50 sec	Dead time after 3phase faults
3489	4.AR Tdead1Trip	0.01 .. 1800.00 sec; ∞	∞ sec	Dead time after 1pole trip
3490	4.AR Tdead3Trip	0.01 .. 1800.00 sec; ∞	0.50 sec	Dead time after 3pole trip
3491	4.AR: Tdead EV.	0.01 .. 1800.00 sec	1.20 sec	Dead time after evolving fault
3492	4.AR: CB? CLOSE	YES NO	NO	CB ready interrogation before re-closing
3493	4.AR SynRequest	YES NO	NO	Request for synchro-check after 3pole AR

2.13.4 Information List

No.	Information	Type of Information	Comments
2701	>AR on	SP	>AR: Switch on auto-reclose function
2702	>AR off	SP	>AR: Switch off auto-reclose function
2703	>AR block	SP	>AR: Block auto-reclose function
2711	>AR Start	SP	>External start of internal Auto reclose
2712	>Trip L1 AR	SP	>AR: External trip L1 for AR start
2713	>Trip L2 AR	SP	>AR: External trip L2 for AR start
2714	>Trip L3 AR	SP	>AR: External trip L3 for AR start
2715	>Trip 1pole AR	SP	>AR: External 1pole trip for AR start
2716	>Trip 3pole AR	SP	>AR: External 3pole trip for AR start
2727	>AR RemoteClose	SP	>AR: Remote Close signal
2731	>Sync.release	SP	>AR: Sync. release from ext. sync.-check
2737	>BLOCK 1pole AR	SP	>AR: Block 1pole AR-cycle
2738	>BLOCK 3pole AR	SP	>AR: Block 3pole AR-cycle
2739	>BLK 1phase AR	SP	>AR: Block 1phase-fault AR-cycle
2740	>BLK 2phase AR	SP	>AR: Block 2phase-fault AR-cycle
2741	>BLK 3phase AR	SP	>AR: Block 3phase-fault AR-cycle
2742	>BLK 1.AR-cycle	SP	>AR: Block 1st AR-cycle
2743	>BLK 2.AR-cycle	SP	>AR: Block 2nd AR-cycle
2744	>BLK 3.AR-cycle	SP	>AR: Block 3rd AR-cycle
2745	>BLK 4.-n. AR	SP	>AR: Block 4th and higher AR-cycles
2746	>Trip for AR	SP	>AR: External Trip for AR start
2747	>Pickup L1 AR	SP	>AR: External pickup L1 for AR start
2748	>Pickup L2 AR	SP	>AR: External pickup L2 for AR start
2749	>Pickup L3 AR	SP	>AR: External pickup L3 for AR start
2750	>Pickup 1ph AR	SP	>AR: External pickup 1phase for AR start
2751	>Pickup 2ph AR	SP	>AR: External pickup 2phase for AR start
2752	>Pickup 3ph AR	SP	>AR: External pickup 3phase for AR start
2781	AR off	OUT	AR: Auto-reclose is switched off
2782	AR on	IntSP	AR: Auto-reclose is switched on
2783	AR is blocked	OUT	AR: Auto-reclose is blocked
2784	AR not ready	OUT	AR: Auto-reclose is not ready
2787	CB not ready	OUT	AR: Circuit breaker not ready
2788	AR T-CBreadyExp	OUT	AR: CB ready monitoring window expired
2796	AR on/off BI	IntSP	AR: Auto-reclose ON/OFF via BI
2801	AR in progress	OUT	AR: Auto-reclose in progress
2809	AR T-Start Exp	OUT	AR: Start-signal monitoring time expired
2810	AR TdeadMax Exp	OUT	AR: Maximum dead time expired
2818	AR evolving Flt	OUT	AR: Evolving fault recognition
2820	AR Program1pole	OUT	AR is set to operate after 1p trip only
2821	AR Td. evol.Flt	OUT	AR dead time after evolving fault
2839	AR Tdead 1pTrip	OUT	AR dead time after 1pole trip running
2840	AR Tdead 3pTrip	OUT	AR dead time after 3pole trip running
2841	AR Tdead 1pFlt	OUT	AR dead time after 1phase fault running
2842	AR Tdead 2pFlt	OUT	AR dead time after 2phase fault running

No.	Information	Type of Information	Comments
2843	AR Tdead 3pFlt	OUT	AR dead time after 3phase fault running
2844	AR 1stCyc. run.	OUT	AR 1st cycle running
2845	AR 2ndCyc. run.	OUT	AR 2nd cycle running
2846	AR 3rdCyc. run.	OUT	AR 3rd cycle running
2847	AR 4thCyc. run.	OUT	AR 4th or higher cycle running
2848	AR ADT run.	OUT	AR cycle is running in ADT mode
2851	AR CLOSE Cmd.	OUT	AR: Close command
2852	AR Close1.Cyc1p	OUT	AR: Close command after 1pole, 1st cycle
2853	AR Close1.Cyc3p	OUT	AR: Close command after 3pole, 1st cycle
2854	AR Close 2.Cyc	OUT	AR: Close command 2nd cycle (and higher)
2857	AR CLOSE RDT TD	OUT	AR: RDT Close command after TDEADxTRIP
2861	AR T-Recl. run.	OUT	AR: Reclaim time is running
2862	AR successful	OUT	AR successful
2864	AR 1p Trip Perm	OUT	AR: 1pole trip permitted by internal AR
2865	AR Sync.Request	OUT	AR: Synchro-check request
2871	AR TRIP 3pole	OUT	AR: TRIP command 3pole
2889	AR 1.CycZoneRel	OUT	AR 1st cycle zone extension release
2890	AR 2.CycZoneRel	OUT	AR 2nd cycle zone extension release
2891	AR 3.CycZoneRel	OUT	AR 3rd cycle zone extension release
2892	AR 4.CycZoneRel	OUT	AR 4th cycle zone extension release
2893	AR Zone Release	OUT	AR zone extension (general)
2894	AR Remote Close	OUT	AR Remote close signal send

2.14 Synchronism and voltage check (optional)

The synchronism and voltage check function ensures, when switching a line onto a busbar, that the stability of the network is not endangered. The voltage of the feeder to be energized is compared to that of the busbar to check conformances in terms of magnitude, phase angle and frequency within certain tolerances. Optionally, deenergization of the feeder can be checked before it is connected to an energized busbar (or vice versa).

The synchronism check can either be conducted only for automatic reclosure, only for manual closure (this includes also closing via control command) or in both cases. Different close permission (release) criteria can also be programmed for automatic and manual closure.

Synchro check is also possible without external matching transformers if a power transformer is located between the measuring points.

Closing is released for synchronous or asynchronous system conditions. In the latter case, the device determines the time for issuing the close command such that the voltages are identical the instant the breaker poles make contact.

2.14.1 Method of Operation

General

For comparing the two voltages, the synchro check uses the voltages U_{sy1} and U_{sy2}. If the voltage transformers for the protection functions (U_{sy1}) are connected to the feeder side, U_{sy2} has to be connected to a busbar voltage. If, however, the voltage transformers for the protection functions U_{sy1} are connected to the busbar side, the U_{sy2} has to be connected to a feeder voltage.

U_{sy2} can be any phase-to-earth or phase-to-phase voltage (see Section 2.1.2.1 margin heading Voltage Connection).

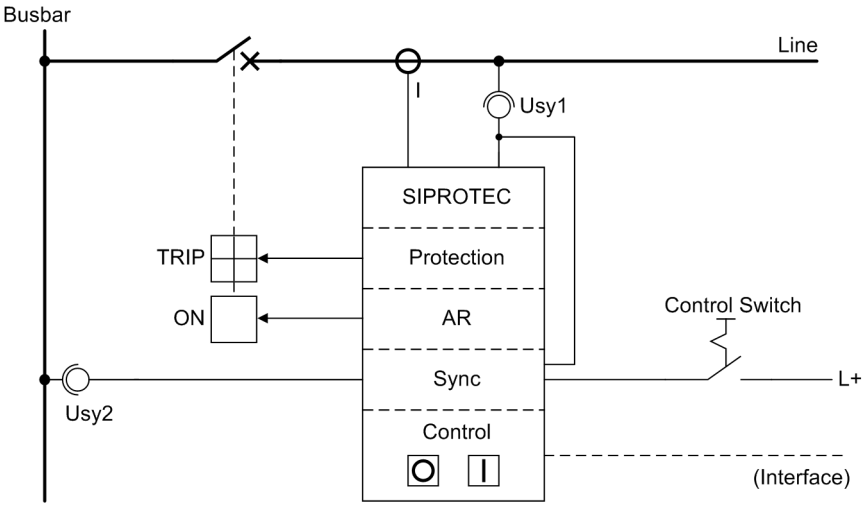

Figure 2-122 Synchronism check on closing - example

If a power transformer is located between the feeder voltage transformers and the busbar voltage transformers (Figure 2-123), its vector group can be compensated for by the 7SA522 relay, so that no external matching transformers are necessary.

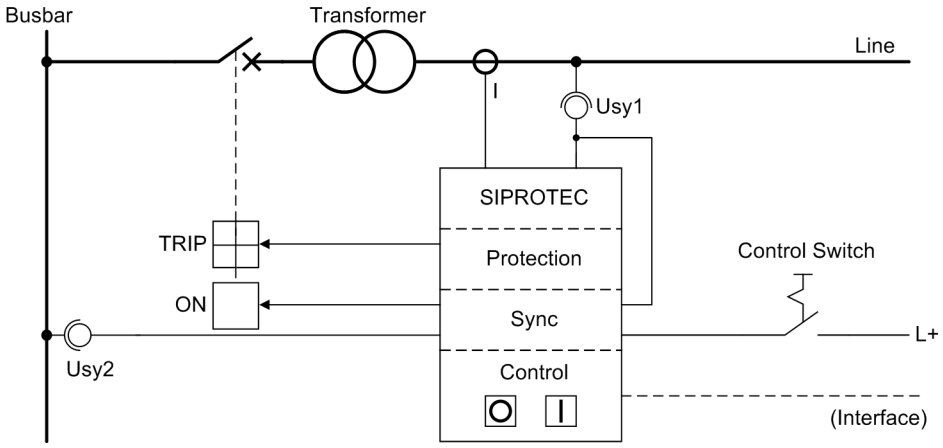

Figure 2-123 Synchronism check across a transformer - example

The synchronism check function in the 7SA522 usually operates in conjunction with the integrated automatic reclose, manual close, and the control functions of the relay. It is also possible to employ an external automatic reclosing system. In such a case signal exchange between the devices is accomplished via binary inputs and outputs (see Figure 2-124).

When closing via the integrated control function, the configured interlocking conditions may have to be verified before checking the conditions for synchronism. After the synchronism check grants the release, the interlocking conditions are not checked a second time.

Furthermore, switching is possible under synchronous or asynchronous system conditions or both.

Synchronous switching means that the closing command is issued as soon as the following critical values lie within the set tolerances:

- Voltage magnitude difference **AR maxVolt.Diff** (address 3511) or **MC maxVolt.Diff** (address 3531)
- Angle difference **AR maxAngleDiff** (address 3513) or **MC maxAngleDiff** (address 3533)
- Frequency difference **AR maxFreq.Diff** (address 3512) or **MC maxFreq.Diff** (address 3532)

For switching under asynchronous system conditions, the device determines the time for issuing the ON command from the current angle and frequency difference such that the angle difference of the voltages (between busbar and feeder) is almost 0° at the instant the poles make contact. For this purpose, the device requires the parameter (address 239 **T-CB close**) with the set circuit breaker closing time. Different frequency limit thresholds apply to switching under synchronous and asynchronous conditions. If closing is permitted exclusively under synchronous system conditions, the frequency difference limit for this condition can be set. If closing is permitted under synchronous as well as under asynchronous system conditions, a frequency difference below 0.01 Hz is treated as a synchronous condition, a higher frequency difference value can then be set for closing under asynchronous system conditions.

The synchro check function only operates when it is requested to do so. Various possibilities exist for this purpose:

- Measuring request from the internal automatic reclosure device. If the internal automatic reclosing function is set accordingly (one or more reclosing attempts set to synchronism check, see also Section 2.13.2), the measuring request is accomplished internally. The release conditions for automatic reclosing apply (parameter AR...).
- Request to execute a check synchronism measurement from an external automatic reclosure device. The measuring request must be activated via the binary input „>Sync. Start AR“ (no. 2906). The release conditions for automatic reclosing apply (parameter AR...).

- Measuring request from the manual CLOSE detection. The manual CLOSE detection of the central function control (Section 2.20.1) issues a measuring request provided that this was configured in the power system data 2 (Section 2.1.4.1, address 1151). This requires that the device is informed of the manual closing via binary input „>Manual Close“ (no. 356). The release conditions for manual closure apply (parameter MC...).
- Request to execute a check synchronism measurement from an external closing command. Binary input „>Sync. Start MC“ (no. 2905) fulfills this purpose. Unlike „>Manual Close“ (see previous paragraph), this merely affects the measuring request to the synchronism check function, but not other integrated manual CLOSE functions such as instantaneous tripping when switching onto a fault (e.g. overreaching zone for distance protection or accelerated tripping of a time overcurrent stage). The release conditions for manual closure apply (parameter MC...).
- Measuring request from the integrated control function via control keys or via the serial interface using DIGSI on a PC or from a control centre. The release conditions for manual closure apply (parameter MC...).

The synchronism-check function gives permission for passage „Sync. release“ (No. 2951) of the closing command to the required function. Furthermore, a separate closing command is available as output indication „Sync.CloseCmd“ (No. 2961).

The check of the release conditions is limited by an adjustable synchronous monitoring time **T-SYN. DURATION**. The configured conditions must be fulfilled within this time. If they are not, the synchronism will not be checked. A new synchronism check sequence requires a new request.

The device generates messages if, after a request to check synchronism, the conditions for release are not fulfilled, i.e. if the absolute voltage difference **AR maxVolt.Diff** or. **MC maxVolt.Diff**, frequency difference **AR maxFreq.Diff** or **MC maxFreq.Diff** or angle difference **AR maxAngleDiff** or **MC maxAngleDiff** lie outside the permissible limit values. A precondition for these indications is that voltages within the operating range of the relay are available. When a closing command originates from the integrated control function and the conditions for synchronism are not fulfilled, the command is cancelled, i.e. the control function outputs „CO–“ (refer also to Section 2.22.1).

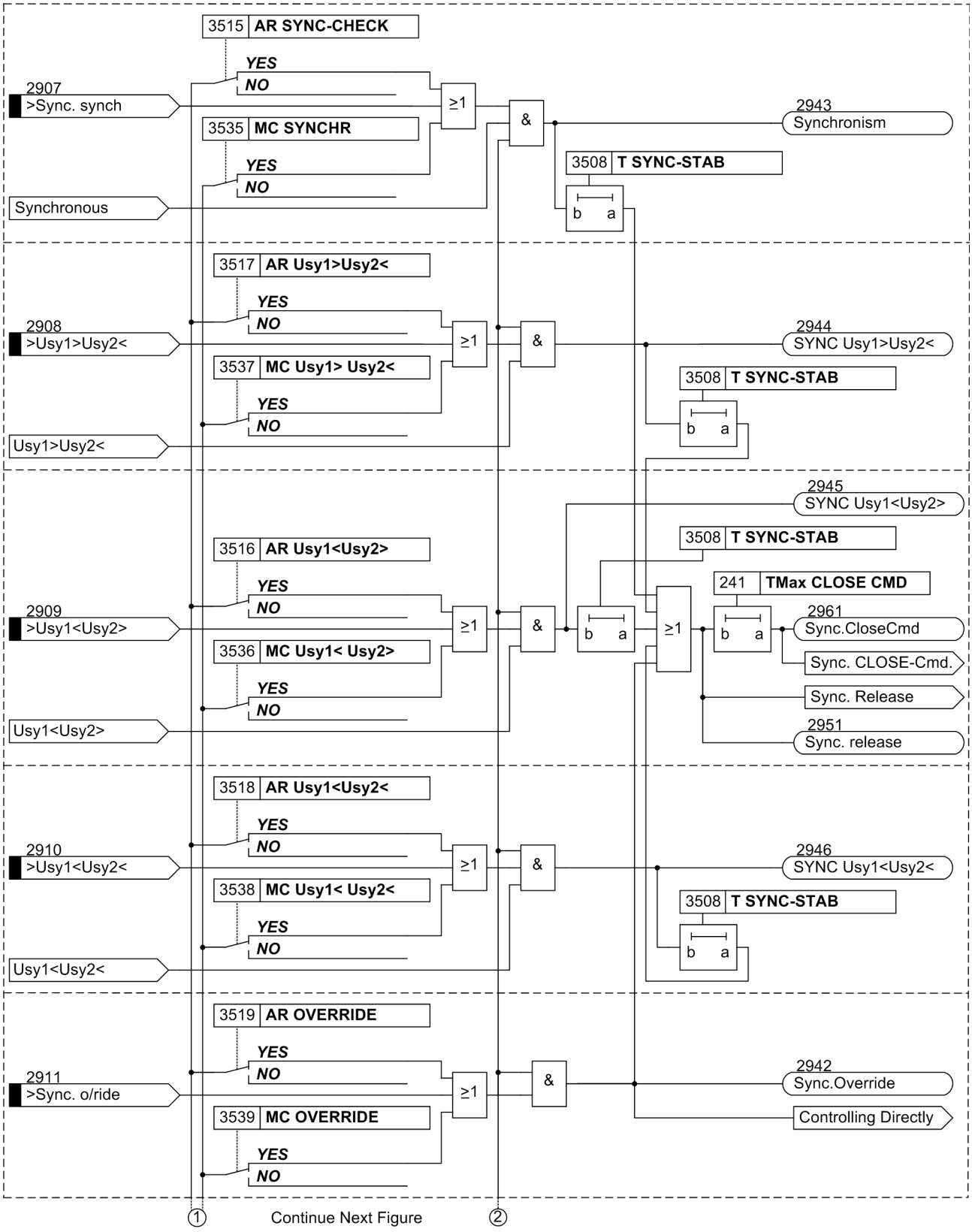
3515 AR SYNC-CHECK
YES
NO
2907
>Sync. synch
≥1
&
2943
Synchronism
3535 MC SYNCHR
YES
NO
3508 T SYNC-STAB
b a
Synchronous
3517 AR Usy1>Usy2<
YES
NO
2908
>Usy1>Usy2<
≥1
&
2944
SYNC Usy1>Usy2<
3537 MC Usy1> Usy2<
3508 T SYNC-STAB
YES
NO
b a
Usy1>Usy2<
2945
SYNC Usy1<Usy2>
3508 T SYNC-STAB
3516 AR Usy1<Usy2>
241 TMax CLOSE CMD
YES
NO
2909
>Usy1<Usy2>
≥1
&
b a
≥1
b a
2961
Sync.CloseCmd
3536 MC Usy1< Usy2>
Sync. CLOSE-Cmd.
YES
NO
Sync. Release
Usy1<Usy2>
2951
Sync. release
3518 AR Usy1<Usy2<
YES
NO
2910
>Usy1<Usy2<
≥1
&
2946
SYNC Usy1<Usy2<
3538 MC Usy1< Usy2<
3508 T SYNC-STAB
YES
NO
b a
Usy1<Usy2<
3519 AR OVERRIDE
YES
NO
2911
>Sync. o/ride
≥1
&
2942
Sync.Override
3539 MC OVERRIDE
Controlling Directly
YES
NO
1
Continue Next Figure
2

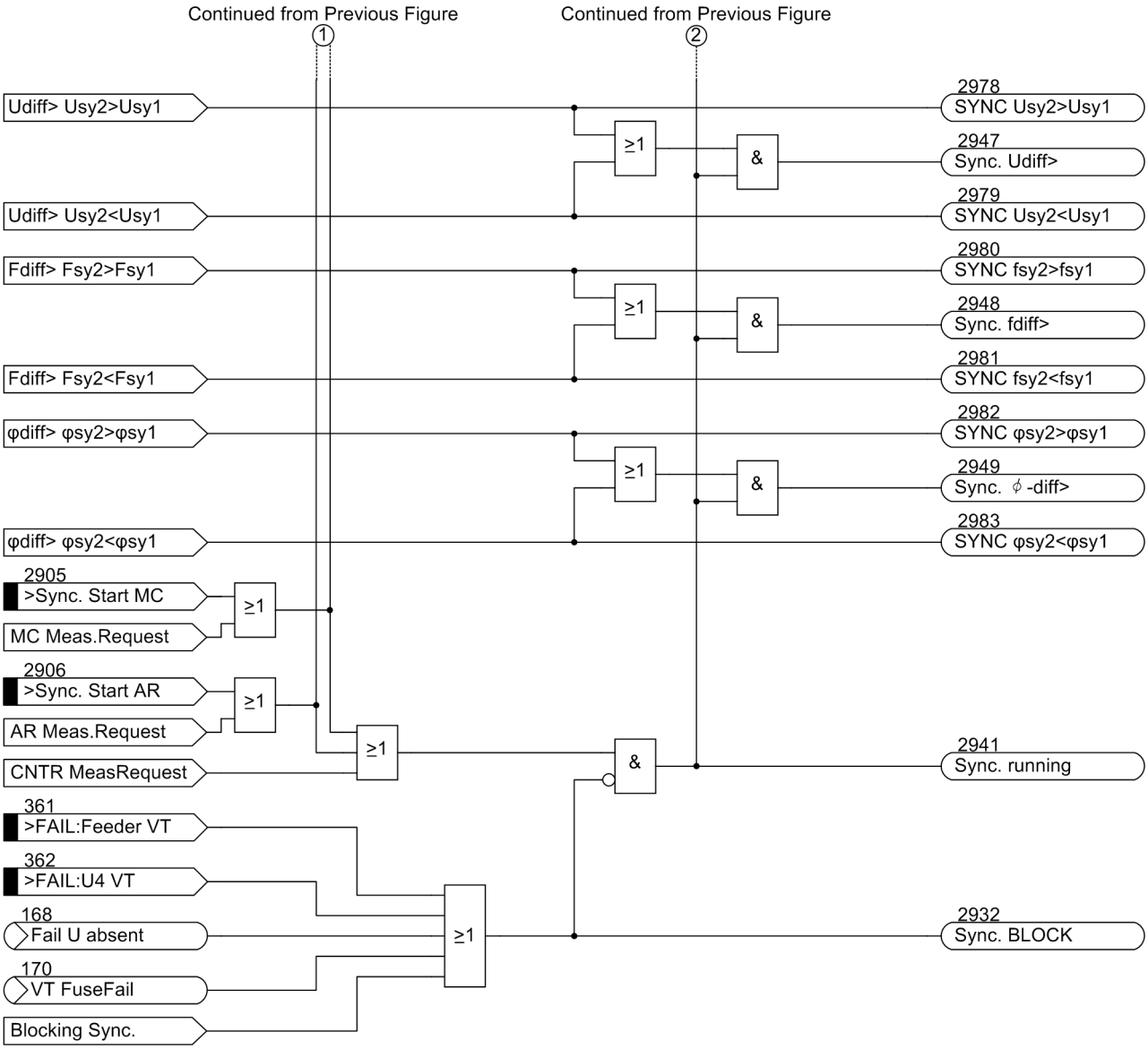

Figure 2-124 Synchro check logic

Operating modes

The closing check for automatic reclosing is possible in one of the following operating modes:

AR SYNC-CHECK	Released at synchronism, that is when the critical values **AR maxVolt.Diff**, **AR maxFreq.Diff**, **AR maxAngleDiff** are within the set limits.
AR Usy1<Usy2>	Released if measuring point Usy1< is de-energised and the measuring point Usy2> is energised.
AR Usy1>Usy2<	Released if measuring point Usy1> is energised and the measuring point Usy2< is de-energised.
AR Usy1<Usy2<	Released if measuring point Usy1< is de-energised and the measuring point Usy2< is also de-energised.
AR OVERRIDE	Released without any check.

The closing check for manual reclosing is possible in one of the following operating modes:

MC SYNCHR	Released at synchronism, that is when the critical values **MC maxVolt.Diff**, **MC maxFreq.Diff**, **MC maxAngleDiff** are within the set limits.
MC Usy1< Usy2>	Released if measuring point Usy1< is de-energised and the measuring point Usy2> is energised.
MC Usy1> Usy2<	Released if measuring point Usy1> is energised and the measuring point Usy2< is de-energised.
MC Usy1< Usy2<	Released if measuring point Usy1< is de-energised and the measuring point Usy2< is also de-energised.
MC OVERRIDE	Released without any check.

Each of these conditions can be enabled or disabled individually; combinations are also possible, e.g. release if **AR Usy1<Usy2>** or **AR Usy1>Usy2<** are fulfilled. Combination of **AR OVERRIDE** with other parameters is, of course, not reasonable (see also Figure 2-124).

The release conditions can be configured individually for automatic reclosing or for manual closing or for closing via control commands. For example, manual closing and closing via control command can be allowed in cases of synchronism or dead line, while, before an automatic reclose attempt dead line conditions are only checked at one line end and after the automatic reclose attempt only synchronism at the other end.

Dead-line closing

To release the closing command to couple a dead overhead line to a live busbar, the following conditions are checked:

- Is the feeder voltage below the set value **Dead Volt. Thr.**?
- Is the busbar voltage above the setting value **Live Volt. Thr.** but below the maximum voltage **Umax**?
- Is the frequency within the permitted operating range $f_N \pm 3$ Hz?

After successful check the closing command is released.

Corresponding conditions apply when switching a live line onto a dead busbar or a dead line onto a dead busbar.

Closing under synchronous system conditions

Before releasing a closing command under synchronous conditions, the following conditions are checked:

- Is the busbar voltage above the setting value **Live Volt. Thr.** but below the maximum voltage **Umax**?
- Is the feeder voltage above the setting value **Live Volt. Thr.** but below the maximum voltage **Umax**?
- Is the voltage difference $|U_{sy1} - U_{sy2}|$ within the permissible tolerance **AR maxVolt.Diff** or **MC maxVolt.Diff**?
- Are the two frequencies f_{sy1} and f_{sy2} within the permitted operating range $f_N \pm 3$ Hz?
- Does the frequency difference $|f_{sy1} - f_{sy2}|$ lie within the permissible tolerance **AR maxFreq.Diff** or **MC maxFreq.Diff**?
- Is the angle difference $|\varphi_{sy1} - \varphi_{sy2}|$ within the permissible tolerance **AR maxAngleDiff** or **MC maxAngleDiff**?

To check whether these conditions are fulfilled for a certain minimum time, you can set this minimum time as **T SYNC-STAB**. Checking the synchronism conditions can also be confined to the a maximum monitoring time **T-SYN. DURATION**. This implies that the conditions must be fulfilled within the time **T-SYN. DURATION** for the duration of **T SYNC-STAB**. This the case, the closing release is granted.

Closing under asynchronous system conditions

Before releasing a closing command under asynchronous conditions, the following conditions are checked:

- Is the busbar voltage above the setting value **Live Volt. Thr.** but below the maximum voltage **Umax**?
- Is the feeder voltage above the setting value **Live Volt. Thr.** but below the maximum voltage **Umax**?
- Is the voltage difference $|U_{sy1} – U_{sy2}|$ within the permissible tolerance **AR maxVolt.Diff** or **MC maxVolt.Diff**?
- Are the two frequencies f_{sy1} and f_{sy2} within the permitted operating range $f_N \pm 3$ Hz?
- Does the frequency difference $|f_{sy1} – f_{sy2}|$ lie within the permissible tolerance **AR maxFreq.Diff** or **MC maxFreq.Diff**?

When the check has been terminated successfully, the device determines the next synchronizing time from the angle difference and the frequency difference. The close command is issued at synchronization time minus the operating time of the circuit breaker.

2.14.2 Setting Notes

Preconditions

When setting the general power system data (Power system data 1, refer to Section 2.1.2.1) a number of parameters regarding the measured quantities and the operating mode of the synchronism check function must be applied.

This concerns the following parameters:

203 **Unom PRIMARY**	primary rated voltage of the voltage transformers of the protection functions (phase-to-phase) in kV, measuring point U_{sy1};
204 **Unom SECONDARY**	secondary rated voltage of the protection functions (phase-to-phase) in V, measuring point U_{sy1};
210 **U4 transformer**	voltage measuring input U_4 must be set to ***Usy2 transf.***;
212 **Usy2 connection**	voltage connection of measuring point U_{sy2} (e.g. $U_{L1–L2}$),
214 φ **Usy2-Usy1**	phase displacement between the voltages U_{sy2} and U_{sy1} if a transformer is switched in between;
215 **Usy1/Usy2 ratio**	ratio between the secondary voltage U_{sy1} and voltage U_{sy2} under nominal condition;
230 **Rated Frequency**	the operating range of the synchronism check refers to the nominal frequency of the power system ($f_N \pm 3$ Hz);
1103 **FullScaleVolt.**	nominal operational voltage of the primary power system (phase-phase) in kV;

and, if switching under asynchronous system conditions is allowed,

239 **T-CB close**	the closing time of the circuit breaker.

WARNING!

Switching under Asynchronous System Conditions!

Closing under asynchronous system conditions requires the closing time of the circuit breaker to be set correctly in the Power System Data 1 (address 239).

Otherwise, faulty synchronization may occur.

General

The synchronism check can only operate if it has been set to ***Enabled*** and parameter **U4 transformer** (address 210) to ***Usy2 transf.*** during configuration of the device scope (address 135).

The measured values of synchronism check (636 „Udiff =“, 637 „Usy1=“, 638 „Usy2=“, 647 „F-diff=“, 649 „F-sy1 =“, 646 „F-sy2 =“ and 648 „φdif=“) are only available if the synchronism check is in service.

Different interrogation conditions can be parameterized for automatic reclosure on the one hand and for manual closure on the other hand. Each closing command is considered a manual reclosure if it was initiated via the integrated control function or via a serial interface.

The general limit values for synchronism check are set at address 3501 to 3508. Additionally, addresses 3510 to 3519 are relevant for automatic reclosure, addresses 3530 to 3539 are relevant for manual closure. Moreover, address 3509 is relevant for closure via the integrated control function.

The complete synchronism check function is switched ***ON*** or ***OFF*** in address 3501 **FCT Synchronism**. If switched off, the synchronism check does not verify the synchronization conditions and release is not granted. You can also set ***ON:w/o CloseCmd***: the CLOSE command is in this case not included in the common device alarm „Relay CLOSE“ (No. 510), but the alarm „Sync.CloseCmd“ (No. 2961) is issued.

Address 3502 **Dead Volt. Thr.** indicates the voltage threshold below which the feeder or the busbar can safely be considered de-energised (for checking a de-energised feeder or busbar). The setting is applied in Volts secondary. This value can be entered as a primary value when parameterising with a PC and DIGSI. Depending on the VT connection these are phase-to-earth voltages or phase-to-phase voltages.

Address 3503 **Live Volt. Thr.** indicates the voltage above which the feeder or busbar is regarded as being definitely energised (for energised line or busbar check and for the lower limit of synchronism check). It must be set below the minimum operational undervoltage to be expected. The setting is applied in volts secondary. This value can be entered as a primary value when parameterising with a PC and DIGSI. Depending on the connection of the voltages these are phase-to-earth voltages or phase-to-phase voltages.

The maximum permissible voltage for the operating range of the synchronism check function is set in address 3504 **Umax**. The setting is applied in Volts secondary. This value can be entered as a primary value when parameterising with a PC and DIGSI. Depending on the VT connection these are phase-to-earth voltages or phase-to-phase voltages.

Verification of the release conditions via synchronism check can be limited to a configurable synchronous monitoring time **T-SYN. DURATION** (address 3507). The configured conditions must be fulfilled within this time. If not, closure will not be released. If this time is set to ∞, the conditions will be checked until they are fulfilled or the measurement request is cancelled.

For switching under synchronous conditions you can specify a delay time **T SYNC-STAB** (address 3508). During this time the voltage criteria must at least be fulfilled before closing is released.

Synchronism conditions for automatic reclosure

Addresses 3510 to 3519 are relevant to the check conditions before automatic reclosure of the circuit breaker. When setting the parameters for the internal automatic reclosing function (Section 2.13.2), it is decided with which automatic reclosing cycle synchronism and voltage check should be carried out.

Address 3510 **Op.mode with AR** determines whether closing under asynchronous system conditions is allowed for automatic reclosure. Set this parameter to ***with T-CB close*** to allow asynchronous closing; the relay will then consider the circuit breaker closing time before determining the correct instant for the close command. Remember that closing under asynchronous system conditions is allowed only if the circuit breaker closing time is set correctly (see above under „Preconditions“)! If you wish to permit automatic reclosure only under synchronous system conditions, set this address to ***w/o T-CB close***.

The permissible difference between the voltages is set in address 3511 **AR maxVolt.Diff**. The setting is applied in Volts secondary. This value can be entered as a primary value when parameterising with a PC and DIGSI. Depending on the VT connection these are phase-to-earth voltages or phase-to-phase voltages.

The permissible frequency difference between the voltages is set in address 3512 **AR maxFreq.Diff**, the permissible phase angle difference in address 3513 **AR maxAngleDiff**.

The further release conditions for automatic reclosing are set at addresses 3515 to 3519.

The following addresses mean:

3515 **AR SYNC-CHECK**	both measuring points U_{sy1} and U_{sy2} must be energised (**Live Volt. Thr.**, address 3503); the synchronism conditions are checked, i.e. **AR maxVolt.Diff** (address 3511), **AR maxFreq.Diff** (address 3512) and **AR maxAngleDiff** (address 3513). This parameter can only be altered with DIGSI under **Additional Settings**;
3516 **AR Usy1<Usy2>**	the measuring point U_{sy1} must be de-energised (**Dead Volt. Thr.**, address 3502), measuring point U_{sy2} must be energised (**Live Volt. Thr.**, address 3503) ;
3517 **AR Usy1>Usy2<**	the measuring point U_{sy1} must be energised (**Live Volt. Thr.**, address 3503), measuring point U_{sy2} must be de-energised (**Dead Volt. Thr.**, address 3502);
3518 **AR Usy1<Usy2<**	both measuring points U_{sy1} and U_{sy2} must be de-energised (**Dead Volt. Thr.**, address 3502);
3519 **AR OVERRIDE**	automatic reclosure is released without any check.

The five possible release conditions are independent of one another and can be combined.

Synchronism conditions for manual closure and control command

Addresses 3530 to 3539 are relevant to the check conditions before manual closure and closing via control command of the circuit breaker. When setting the general protection data (Power System Data 2, Section 2.1.4.1) it was already decided at address 1151 whether synchronism and voltage check should be carried out before manual closing. With the following setting in address **MAN. CLOSE** = ***w/o Sync-check***, no checks are performed before manual closing.

For commands through the integrated control (local, DIGSI, serial interface), address 3509 **SyncCB** determines whether synchronism checks will be performed or not. This address also informs the device to which switching device of the control the synchronising request refers. You can select from the switching devices which are available for the integrated control. Choose the circuit breaker to be operated via the synchronism check. This is usually the circuit breaker which is operated in case of manual closing or automatic reclosure. If you set **SyncCB** = ***none*** here, a CLOSE command via the integrated control will be carried out without synchronism check.

Address 3530 **Op.mode with MC** determines whether closing under asynchronous system conditions is allowed for manual closing or reclosure via control command. Set this parameter to ***with T-CB close*** to allow asynchronous closing; the relay will then consider the circuit breaker closing time before determining the correct instant for the close command. Remember that closing under asynchronous system conditions is allowed only if the circuit breaker closing time is set correctly (see above under „Preconditions“)! If you wish to permit manual closure or closing via control command only under synchronous system conditions, set this address to ***w/o T-CB close***.

The permissible difference between the voltages is set in address 3531 **MC maxVolt.Diff**. The setting is applied in Volts secondary. This value can be entered as a primary value when parameterising with a PC and DIGSI. Depending on the VT connection these are phase-to-earth voltages or phase-to-phase voltages.

The permissible frequency difference between the voltages is set at address 3532 **MC maxFreq.Diff**, the permissible phase angle difference at address 3533 **MC maxAngleDiff**.

The further release conditions for manual reclosing or reclosure via control command are set under addresses 3535 to 3539.

The following addresses mean:

3535 **MC SYNCHR**	both measuring points U_{sy1} and U_{sy2} must be energised (**Live Volt. Thr.**, address 3503); the synchronism conditions are checked i.e. **MC maxVolt.Diff** (address 3531), **MC maxFreq.Diff** (address 3532) and **MC maxAngleDiff** (address 3533). This parameter can only be altered in DIGSI at **Display Additional Settings**;
3536 **MC Usy1< Usy2>**	the measuring point U_{sy1} must be de-energised (**Dead Volt. Thr.**, address 3502), measuring point U_{sy2} must be energised (**Live Volt. Thr.**, address 3503) ;
3537 **MC Usy1> Usy2<**	the measuring point U_{sy1} must be energised (**Live Volt. Thr.**, address 3503), measuring point U_{sy2} must be de-energised (**Dead Volt. Thr.**, address 3502);
3538 **MC Usy1< Usy2<**	both measuring points U_{sy1} and U_{sy2} must be de-energised (**Dead Volt. Thr.**, address 3502);
3539 **MC OVERRIDE**	manual closing or closing via control command is released without any check.

The five possible release conditions are independent of one another and can be combined.

Note

The closing functions of the device issue individual output indications for the corresponding close command. Be sure that the output indications are assigned to the correct output relays.

No. 2851 „AR CLOSE Cmd.“ for CLOSE via command of the automatic reclosure,

No. 562 „Man.Close Cmd“ for manual CLOSE via binary input,

No. 2961 „Sync.CloseCmd“ for CLOSE via synchronism check (not required if synchronism check releases the other CLOSE commands),

No. 7329 „CB1-TEST close“ for CLOSE by circuit breaker test,

additionally CLOSE command via control, e.g. „Brk Close“.

No. 510 „Relay CLOSE“ general CLOSE command. It comprises all CLOSE commands described above.

Notes on the Information List

The most important information messages of the device are briefly explained below, except those already detailed in the following lists or in the previous paragraphs.

„>Sync. Start MC“ (No. 2905)

Binary input which enables direct initiation of the synchronism check with setting parameters for manual close. This initiation with setting parameter for manual close has always precedence if binary inputs „>Sync. Start MC“ (No. 2905) and „>Sync. Start AR“ (No. 2906, see below) are activated at the same time.

„>Sync. Start AR“ (No 2906)

Measuring request from an external automatic reclosure device. The parameters of synchronism check set for automatic reclosure are valid here.

„Sync. req.CNTRL“ (No 2936)

Measurement request of the control function; this request is evaluated on event-triggered basis and only generated if the control issues a measurement request.

„Sync. release“ (No 2951)

Release signal to an external automatic reclosure device.

2.14.3 Settings

Addresses which have an appended "A" can only be changed with DIGSI, under Additional Settings.

Addr.	Parameter	Setting Options	Default Setting	Comments
3501	FCT Synchronism	ON OFF ON:w/o CloseCmd	ON	Synchronism and Voltage Check function
3502	Dead Volt. Thr.	1 .. 100 V	5 V	Voltage threshold dead line / bus
3503	Live Volt. Thr.	20 .. 125 V	90 V	Voltage threshold live line / bus
3504	Umax	20 .. 140 V	110 V	Maximum permissible voltage
3507	T-SYN. DURATION	0.01 .. 600.00 sec; ∞	1.00 sec	Maximum duration of synchronism-check
3508	T SYNC-STAB	0.00 .. 30.00 sec	0.00 sec	Synchronous condition stability timer
3509	SyncCB	(Setting options depend on configuration)	None	Synchronizable circuit breaker
3510	Op.mode with AR	with T-CB close w/o T-CB close	w/o T-CB close	Operating mode with AR
3511	AR maxVolt.Diff	1.0 .. 60.0 V	2.0 V	Maximum voltage difference
3512	AR maxFreq.Diff	0.03 .. 2.00 Hz	0.10 Hz	Maximum frequency difference
3513	AR maxAngleDiff	2 .. 80 °	10 °	Maximum angle difference

Addr.	Parameter	Setting Options	Default Setting	Comments
3515A	AR SYNC-CHECK	YES NO	YES	AR at Usy2>, Usy1>, and Synchr.
3516	AR Usy1<Usy2>	YES NO	NO	AR at Usy1< and Usy2>
3517	AR Usy1>Usy2<	YES NO	NO	AR at Usy1> and Usy2<
3518	AR Usy1<Usy2<	YES NO	NO	AR at Usy1< and Usy2<
3519	AR OVERRIDE	YES NO	NO	Override of any check before AR
3530	Op.mode with MC	with T-CB close w/o T-CB close	w/o T-CB close	Operating mode with Man.Cl
3531	MC maxVolt.Diff	1.0 .. 60.0 V	2.0 V	Maximum voltage difference
3532	MC maxFreq.Diff	0.03 .. 2.00 Hz	0.10 Hz	Maximum frequency difference
3533	MC maxAngleDiff	2 .. 80 °	10 °	Maximum angle difference
3535A	MC SYNCHR	YES NO	YES	Manual Close at Usy2>, Usy1>, and Synchr
3536	MC Usy1< Usy2>	YES NO	NO	Manual Close at Usy1< and Usy2>
3537	MC Usy1> Usy2<	YES NO	NO	Manual Close at Usy1> and Usy2<
3538	MC Usy1< Usy2<	YES NO	NO	Manual Close at Usy1< and Usy2<
3539	MC OVERRIDE	YES NO	NO	Override of any check before Man.Cl

2.14.4 Information List

No.	Information	Type of Information	Comments
2901	>Sync. on	SP	>Switch on synchro-check function
2902	>Sync. off	SP	>Switch off synchro-check function
2903	>BLOCK Sync.	SP	>BLOCK synchro-check function
2905	>Sync. Start MC	SP	>Start synchro-check for Manual Close
2906	>Sync. Start AR	SP	>Start synchro-check for AR
2907	>Sync. synch	SP	>Sync-Prog. Live bus / live line / Sync
2908	>Usy1>Usy2<	SP	>Sync-Prog. Usy1>Usy2<
2909	>Usy1<Usy2>	SP	>Sync-Prog. Usy1<Usy2>
2910	>Usy1<Usy2<	SP	>Sync-Prog. Usy1<Usy2<
2911	>Sync. o/ride	SP	>Sync-Prog. Override (bypass)
2930	Sync. on/off BI	IntSP	Synchro-check ON/OFF via BI
2931	Sync. OFF	OUT	Synchro-check is switched OFF
2932	Sync. BLOCK	OUT	Synchro-check is BLOCKED
2934	Sync. faulty	OUT	Synchro-check function faulty
2935	Sync.Tsup.Exp	OUT	Synchro-check supervision time expired

No.	Information	Type of Information	Comments
2936	Sync. req.CNTRL	OUT	Synchro-check request by control
2941	Sync. running	OUT	Synchronization is running
2942	Sync.Override	OUT	Synchro-check override/bypass
2943	Synchronism	OUT	Synchronism detected
2944	SYNC Usy1>Usy2<	OUT	SYNC Condition Usy1>Usy2< true
2945	SYNC Usy1<Usy2>	OUT	SYNC Condition Usy1<Usy2> true
2946	SYNC Usy1<Usy2<	OUT	SYNC Condition Usy1<Usy2< true
2947	Sync. Udiff>	OUT	Sync. Voltage diff. greater than limit
2948	Sync. fdiff>	OUT	Sync. Freq. diff. greater than limit
2949	Sync. φ-diff>	OUT	Sync. Angle diff. greater than limit
2951	Sync. release	OUT	Synchronism release (to ext. AR)
2961	Sync.CloseCmd	OUT	Close command from synchro-check
2970	SYNC fsy2>>	OUT	SYNC frequency fsy2 > (fn + 3Hz)
2971	SYNC fsy2<<	OUT	SYNC frequency fsy2 < (fn + 3Hz)
2972	SYNC fsy1>>	OUT	SYNC frequency fsy1 > (fn + 3Hz)
2973	SYNC fsy1<<	OUT	SYNC frequency fsy1 < (fn + 3Hz)
2974	SYNC Usy2>>	OUT	SYNC voltage Usy2 >Umax (P.3504)
2975	SYNC Usy2<<	OUT	SYNC voltage Usy2 < U> (P.3503)
2976	SYNC Usy1>>	OUT	SYNC voltage Usy1 >Umax (P.3504)
2977	SYNC Usy1<<	OUT	SYNC voltage Usy1 < U> (P.3503)
2978	SYNC Usy2>Usy1	OUT	SYNC Udiff too large (Usy2>Usy1)
2979	SYNC Usy2<Usy1	OUT	SYNC Udiff too large (Usy2<Usy1)
2980	SYNC fsy2>fsy1	OUT	SYNC fdiff too large (fsy2>fsy1)
2981	SYNC fsy2<fsy1	OUT	SYNC fdiff too large (fsy2<fsy1)
2982	SYNC φsy2>φsy1	OUT	SYNC PHIdiff too large (PHIsy2>PHIsy1)
2983	SYNC φsy2<φsy1	OUT	SYNC PHIdiff too large (PHIsy2<PHIsy1)

2.15 Under and over-voltage protection (optional)

Voltage protection has the function of protecting electrical equipment against undervoltage and overvoltage. Both operational states are unfavourable as overvoltage may cause, for example, insulation problems or undervoltage may cause stability problems.

The overvoltage protection in the 7SA522 detects the phase voltages U_{L1-E}, U_{L2-E} and U_{L3-E}, the phase-to-phase voltages U_{L1-L2}, U_{L2-L3} and U_{L3-L1}, as well as the displacement voltage $3U_0$. Instead of the displacement voltage any other voltage that is connected to the fourth voltage input U_4 of the device can be detected. Furthermore, the device calculates the positive sequence system voltage and the negative sequence system voltage so that the symmetrical components are also monitored. Here compounding is also possible which calculates the voltage at the remote line end.

The undervoltage protection can also use the phase voltages U_{L1-E}, U_{L2-E} and U_{L3-E}, the phase-to-phase voltages U_{L1-L2}, U_{L2-L3} and U_{L3-L1}, as well as the positive sequence components.

These voltage protection functions can be combined according to the user's requirements. They can be switched on or off separately, or used for alarm purposes only. In the latter case, the respective trip commands do not appear. Each voltage protection function is dual-stage, i.e. it is provided with two threshold settings each with the appropriate times delay.

Abnormally high voltages often occur e.g. in low loaded, long distance transmission lines, in islanded systems when generator voltage regulation fails, or after full load shutdown of a generator with the generator disconnected from the system. Even if compensation reactors are used to avoid line overvoltages by compensation of the line capacitance and thus reduction of the overvoltage, the overvoltage will endanger the insulation if the reactors fail (e.g. due to fault clearance). The line must be de-energised within a very short time.

The undervoltage protection can be applied, for example, for disconnection or load shedding tasks in a system. Furthermore, this protection scheme can detect impending stability problems. With induction machines undervoltages have an effect on the stability and permissible torque thresholds.

2.15.1 Overvoltage Protection

Overvoltage Phase-to-Earth

Figure 2-125 depicts the logic diagram of the phase voltage stages. The fundamental component is numerically filtered from each of the three measuring voltages so that harmonics or transient voltage peaks are largely eliminated. Two threshold stages **Uph-e>** (address 3702) and **Uph-e>>** (address 3704) are compared with the voltages. If a phase voltage exceeds these thresholds, it is indicated in a phase-segregated way. Furthermore, a general pickup indication „Uph-e> Pickup“ and „Uph-e>> Pickup“ is given. The drop-out to pickup ratio can be set (**Uph-e>(>) RESET** (address 3709)).

Every stage starts a time delay which is common to all phases. Expiry of the respective time delay **T Uph-e>** (address 3703) or **T Uph-e>>** (address 3705) is signalled and results in the trip command „Uph-e>(>) TRIP“.

The overvoltage protection phase-to-earth can be blocked via a binary input „>Uph-e>(>) BLK“.

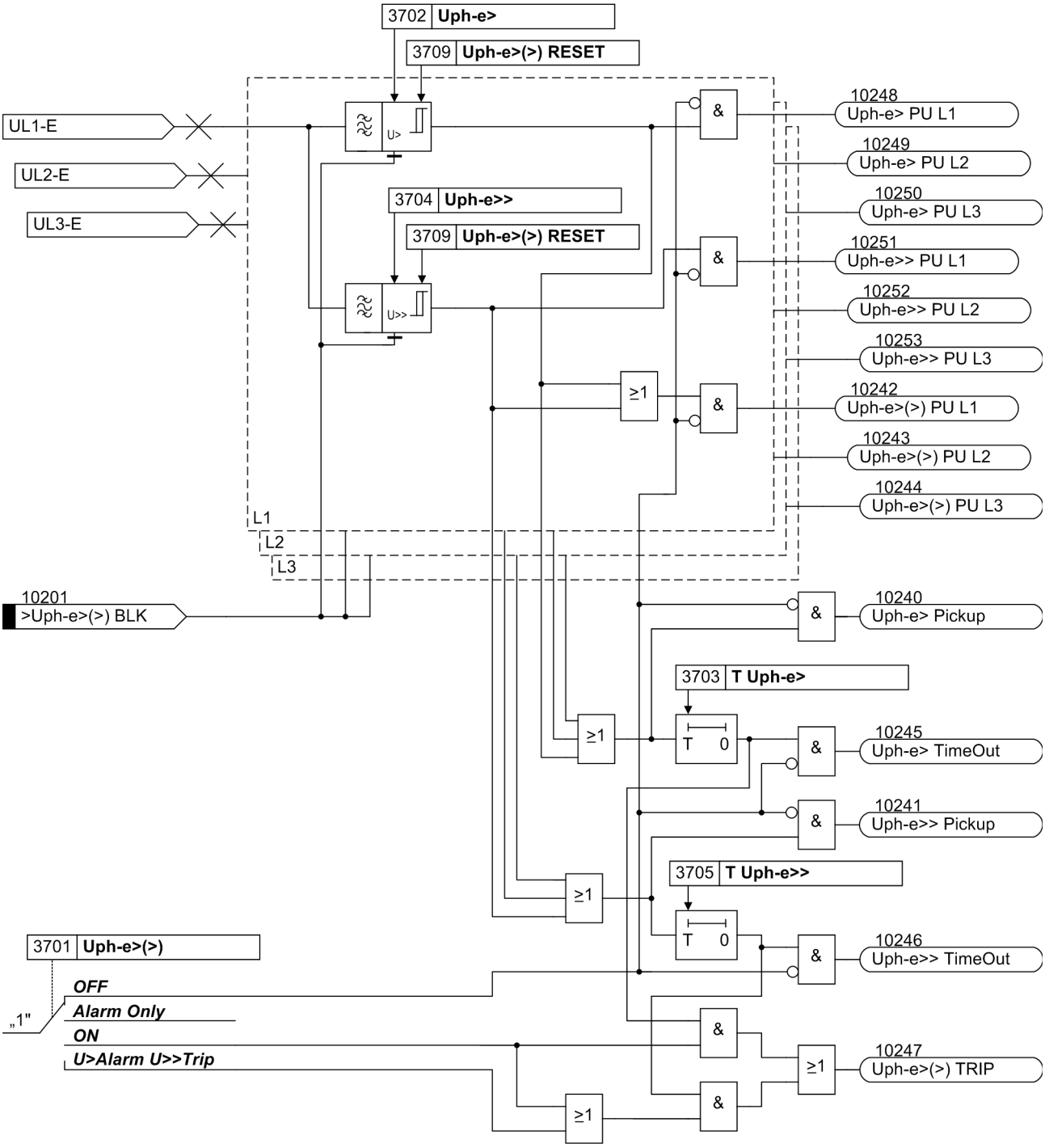

Figure 2-125 Logic diagram of the overvoltage protection for phase voltage

Phase-to-phase overvoltage

The phase-to-phase overvoltage protection operates just like the phase-to-earth protection except that it detects phase-to-phase voltages. Accordingly, phase-to-phase voltages which have exceeded one of the stage thresholds **Uph-ph>** (address 3712) or **Uph-ph>>** (address 3714) are also indicated. Beyond this, Figure 2-125 applies in principle.

The phase-to-phase overvoltage protection can also be blocked via a binary input „>Uph-ph>(>) BLK“.

Overvoltage positive sequence system U_1

The device calculates the positive sequence system according to its defining equation

$$\underline{U}_1 = {}^1/_3 \cdot (\underline{U}_{L1} + \underline{a} \cdot \underline{U}_{L2} + \underline{a}^2 \cdot \underline{U}_{L3})$$

where $\underline{a} = e^{j120^\circ}$.

The resulting positive sequence voltage is fed to the two threshold stages **U1>** (address 3732) and **U1>>** (address 3734) (see Figure 2-126). Combined with the associated time delays **T U1>** (address 3733) and **T U1>>** (address 3735), these stages form a two-stage overvoltage protection based on the positive sequence system. Here too, the drop-out to pickup ratio can be set.

The overvoltage protection for the positive sequence system can also be blocked via a binary input „>U1>(>) BLK“.

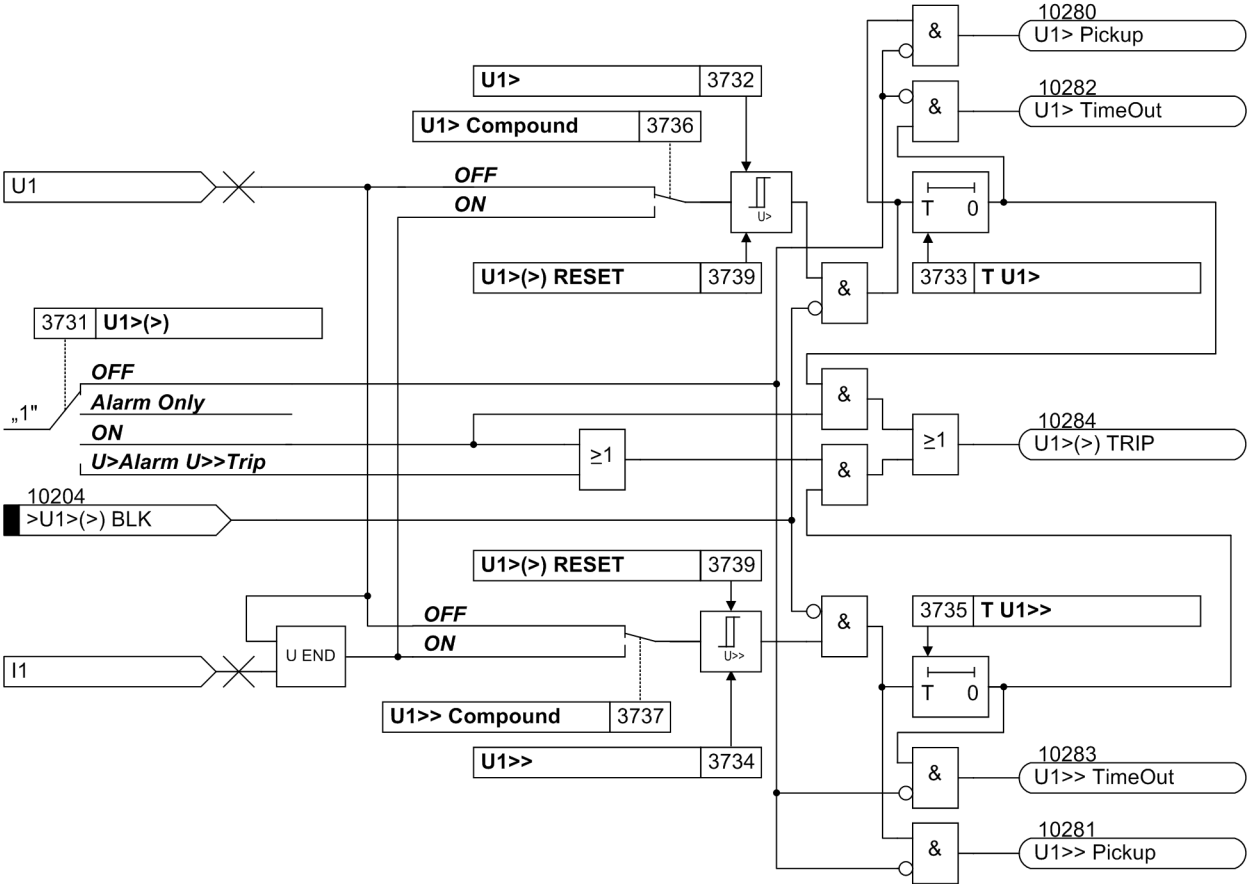

Figure 2-126 Logic diagram of the overvoltage protection for the positive sequence voltage system

Overvoltage protection U_1 with configurable compounding

The overvoltage protection for the positive sequence system may optionally operate with compounding. The compounding calculates the positive sequence system of the voltage at the remote line end. This option is thus particularly well suited for detecting a steady-state voltage increase caused by long transmission lines operating at weak load or no load due to the capacitance per unit length (Ferranti effect). In this case the overvoltage condition exists at the other line end but it can only be removed by switching off the local line end.

For calculating the voltage at the opposite line end, the device requires the line data (inductance per unit length, capacitance per unit length, line angle, line length) which were entered in the Power System Data 2 (Section 2.1.4.1) during configuration.

Compounding is only available if address 137 is set to ***Enabl. w. comp.***. In this case the calculated voltage at the other line end is also indicated in the operational measured values.

Note

Compounding is not suited for lines with series capacitors.

The voltage at the remote line end is calculated from the voltage measured at the local line end and the flowing current by means of a PI equivalent circuit diagram (refer also to Figure 2-127).

$$\underline{U}_{End} = \underline{U}_{Meas} - \left(\underline{I}_{Meas} - \frac{j\omega C_L}{2} \cdot \underline{U}_{Meas}\right) \cdot (R_L + j\omega L_L)$$

with

$\underline{U}_{End}$	the calculated voltage at the remote line end,
$\underline{U}_{Meas}$	the measured voltage at the local line end,
$\underline{I}_{Meas}$	the measured current at the local line end,
C_L	the line capacitance,
R_L	the line resistance,
L_L	the line inductance.

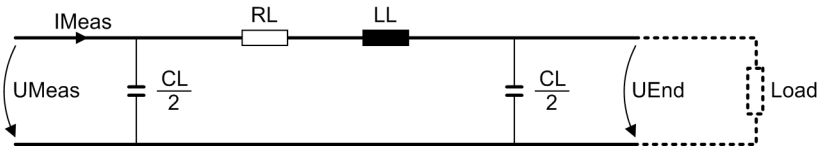

Figure 2-127 PI equivalent diagram for compounding

Overvoltage negative sequence system U_2

The device calculates the negative sequence system voltages according to its defining equation:

$$\underline{U}_2 = {}^1/_3 \cdot (\underline{U}_{L1} + \underline{a}^2 \cdot \underline{U}_{L2} + \underline{a} \cdot \underline{U}_{L3})$$

where $\underline{a} = e^{j120^\circ}$.

The resulting negative sequence voltage is fed to the two threshold stages **U2>** (address 3742) and **U2>>** (address 3744). Figure 2-128 shows the logic diagram. Combined with the associated time delays **T U2>** (address 3743) and **T U2>>** (address 3745), these stages form a two-stage overvoltage protection for the negative sequence system. Here too, the drop-out to pickup ratio can be set.

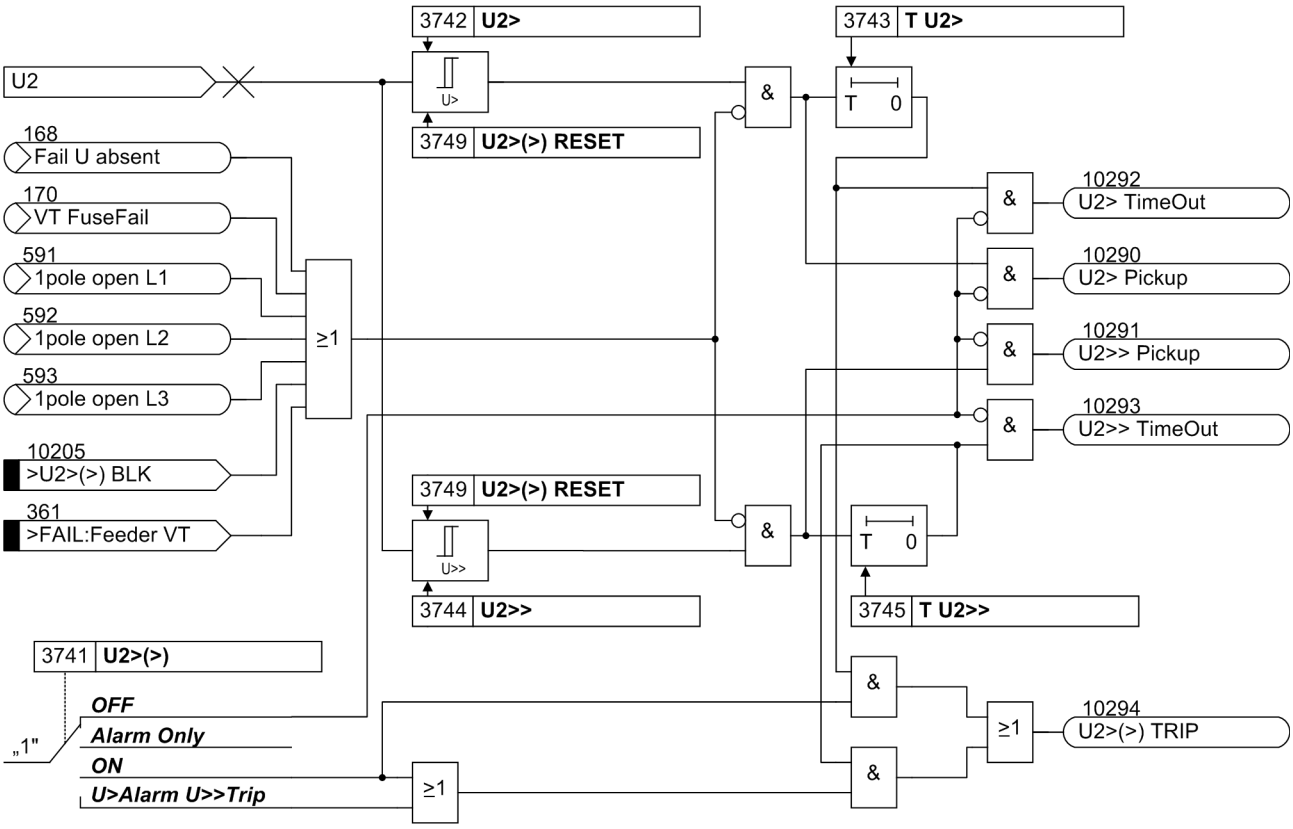

Figure 2-128 Logic diagram of the overvoltage protection for the negative sequence voltage system U_2

The overvoltage protection for the negative sequence system can also be blocked via a binary input „>U2>(>) BLK“. The stages of the negative sequence voltage protection are automatically blocked as soon as an asymmetrical voltage failure was detected („Fuse Failure Monitor“, also see Section 2.19.1, margin heading „Fast Fuse Failure Monitor (Non-symmetrical Voltages))“ or when tripping of the MCB for voltage transformers has been signalled via the binary input „>FAIL:Feeder VT“.

During the single-pole dead time, the stages of the negative-sequence overvoltage protection are automatically blocked since the occurring negative sequence values are only influenced by the asymmetrical power flow, not by the fault in the system. If the device cooperates with an external automatic reclosure function, or if a single-pole tripping can be triggered by a different protection system (working in parallel), the overvoltage protection for the negative sequence system must be blocked via a binary input during single-pole tripping.

Overvoltage zero-sequence system $3U_0$

Figure 2-129 depicts the logic diagram of the zero-sequence voltage stage. The fundamental component is numerically filtered from the measuring voltage so that the harmonics or transient voltage peaks remain largely eliminated.

The triple zero-sequence voltage $3 \cdot U_0$ is fed to the two threshold stages **3U0>** (address 3722) and **3U0>>** (address 3724). Combined with the associated time delays **T 3U0>** (address 3723) and **T 3U0>>** (address 3725), these stages form a two-stage overvoltage protection for the zero-sequence system. Here too, the drop-out to pickup ratio can be set (**3U0>(>) RESET**, address 3729). Furthermore, a restraint delay can be configured which is implemented by repeated measuring (approx. 3 periods).

The overvoltage protection for the zero-sequence system can also be blocked via a binary input „>3U0>(>) BLK“. The stages of the zero-sequence voltage protection are automatically blocked as soon as an asymmetrical voltage failure was detected („Fuse Failure Monitor“, also see Section 2.19.1, margin heading „Fuse Failure Monitor (Non-symmetrical Voltages))“ or when the trip of the mcb for voltage transformers has been signalled via the binary input „>FAIL:Feeder VT“ (internal indication „internal blocking“).

The stages of the zero-sequence voltage protection are automatically blocked during single-pole automatic reclose dead time to avoid pickup with the asymmetrical power flow arising during this state. If the device cooperates with an external automatic reclosure function, or if a single-pole tripping can be triggered by a different protection system (working in parallel), the overvoltage protection for the zero-sequence system must be blocked via a binary input during single-pole tripping.

According to Figure 2-129 the device calculates the voltage to be monitored:

$$3 \cdot \underline{U}_0 = \underline{U}_{L1} + \underline{U}_{L2} + \underline{U}_{L3}.$$

This applies if no suitable voltage is connected to the fourth measuring input U_4.

However, if the displacement voltage U_{delta} of the voltage transformer set is directly connected to the fourth measuring input U_4 of the device and this information was entered during configuration, the device will automatically use this voltage and calculate the triple zero-sequence voltage.

$$3 \cdot U_0 = \textbf{Uph / Udelta} \cdot U_4$$

Since the voltage transformation ratio of the voltage transformer set is usually

$$\frac{U_{N\,prim}}{\sqrt{3}} / \frac{U_{N\,sec}}{\sqrt{3}} / \frac{U_{N\,sec}}{3}$$

the factor is set to **Uph / Udelta** $= 3/\sqrt{3} = \sqrt{3} = 1.73$. For more details, refer to **Power System Data 1** in Section 2.1.4.1 at margin heading „Voltage Connections“ via address 211.

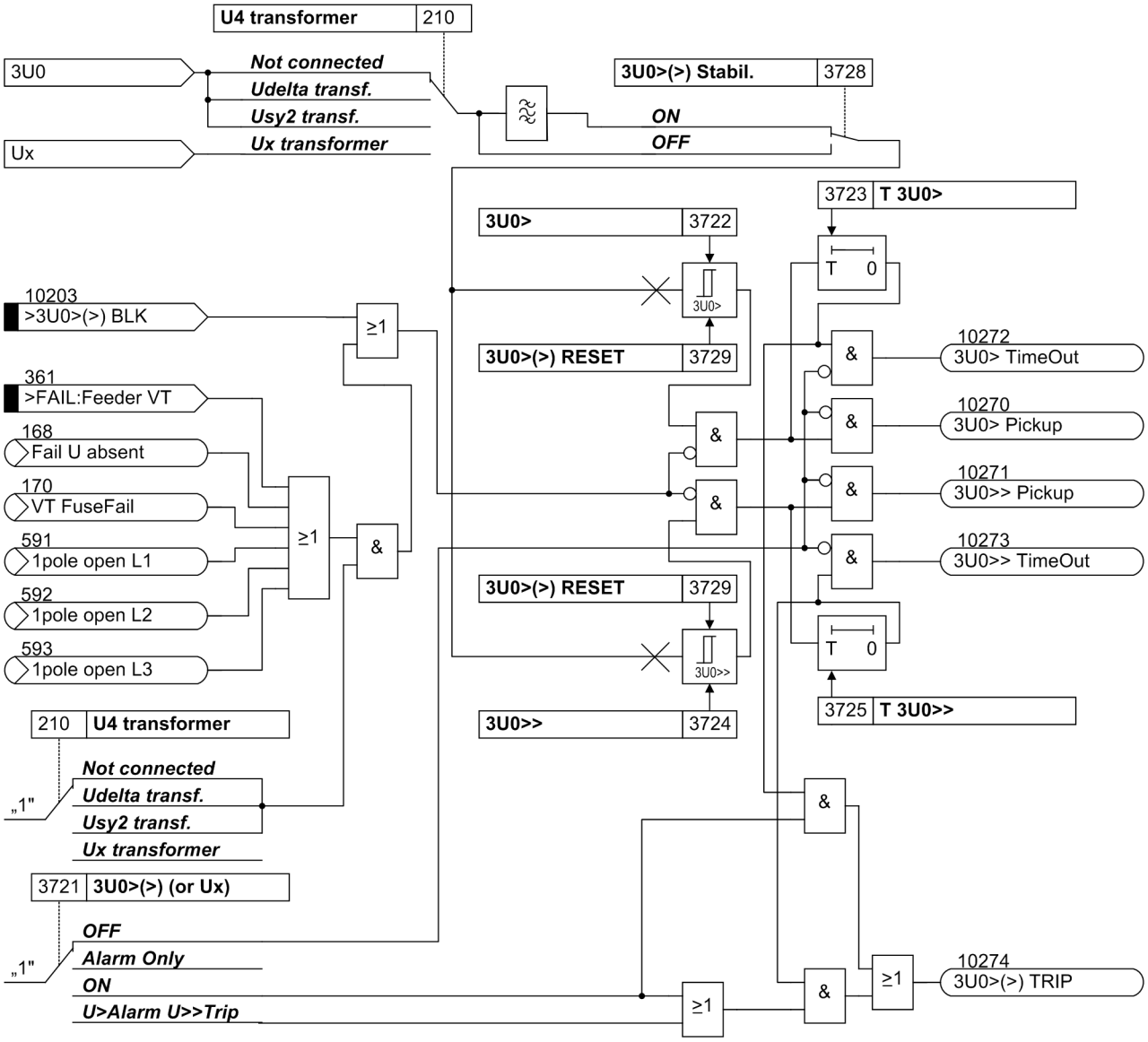

Figure 2-129 Logic diagram of the overvoltage protection for zero sequence voltage

Freely selectable single-phase voltage

As the zero-sequence voltage stages operate separately and independently of the other protection overvoltage functions, they can be used for any other single-phase voltage. Therefore the fourth voltage input U_4 of the device must be assigned accordingly (also see Section 2.1.2, „Voltage Transformer Connection“).

The stages can be blocked via a binary input „>3U0>(>) BLK“. Internal blocking is not accomplished in this application case.

2.15.2 Undervoltage Protection

Undervoltage Phase-to-earth

Figure 2-130 depicts the logic diagram of the phase voltage stages. The fundamental component is numerically filtered from each of the three measuring voltages so that harmonics or transient voltage peaks are largely eliminated. Two threshold stages **Uph-e<** (address 3752) and **Uph-e<<** (address 3754) are compared with the voltages. If the phase voltage falls below a threshold it is indicated in a phase-segregated way. Furthermore, a general pickup indication „Uph-e< Pickup“ and „Uph-e<< Pickup“ is given. The drop-out to pickup ratio can be set (**Uph-e<(<) RESET**, address 3759).

Every stage starts a time delay which is common to all phases. The expiry of the respective time delay **T Uph-e<** (address 3753) or **T Uph-e<<** (address 3755) is signalled and usually results in the trip command „Uph-e<(<) TRIP“.

Depending on the configuration of the substations, the voltage transformers are located on the busbar side or on the outgoing feeder side. This results in a different behaviour of the undervoltage protection when the line is de-energised. While the voltage usually remains present or reappears on the busbar side after a trip command and opening of the circuit breaker, it becomes zero on the outgoing side. For the undervoltage protection, this results in a pickup state being present if the voltage transformers are on the outgoing side. If this pickup must be reset, the current can be used as an additional criterion (current supervision **CURR.SUP. Uphe<**, address 3758) to achieve this result. Undervoltage will then only be detected if, together with the undervoltage condition, the minimum current **PoleOpenCurrent** of the corresponding phase is also exceeded. This condition is communicated by the central function control of the device.

The undervoltage protection phase-to-earth can be blocked via a binary input „Uph-e<(<) BLK“. The stages of the undervoltage protection are then automatically blocked if a voltage failure is detected („Fuse Failure Monitor“, also see Section 2.19.1) or if the trip of the mcb of the voltage transformers is indicated (internal blocking) via the binary input „>FAIL:Feeder VT“.

Also during a single-pole automatic reclose dead time the stages of the undervoltage protection are automatically blocked in the pole open state. If necessary, the current criterion will be considered, so that the stages do not respond to the undervoltage of the disconnected phase when voltage transformers are located on the outgoing side. Only such stages are blocked during the single-pole dead time that can actually generate a trip command according to their setting.

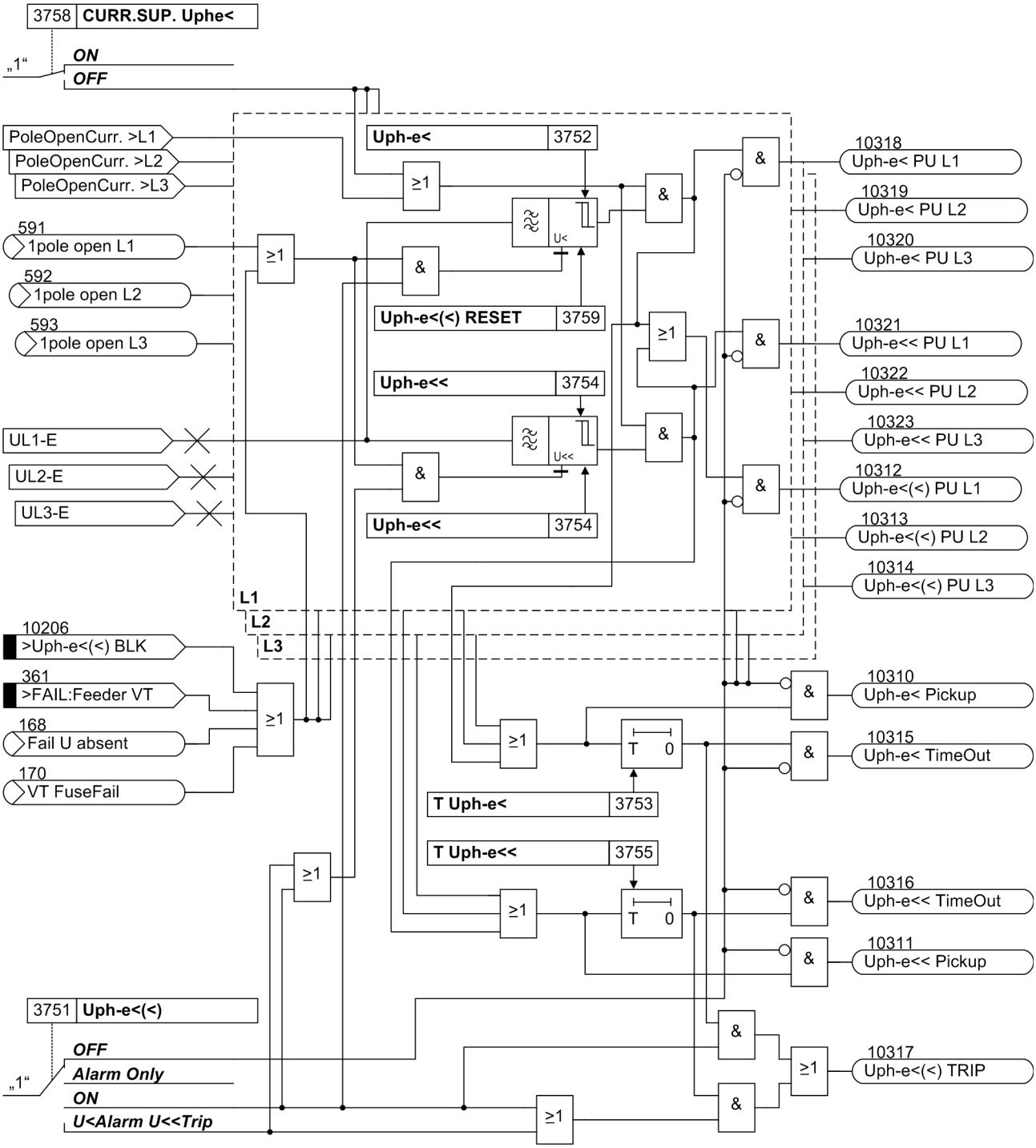

Figure 2-130 Logic diagram of the undervoltage protection for phase voltages

Phase-to-phase undervoltage

Basically, the phase-to-phase undervoltage protection operates like the phase-to-earth protection except that it detects phase-to-phase voltages. Accordingly, both phases are indicated during pickup of an undervoltage stage the value fell below one of the stage thresholds **Uph-ph<** (address 3762) or **Uph-ph<<** (address 3764). Beyond this, Figure 2-130 applies in principle.

It is sufficient for the current criterion that current flow is detected in one of the involved phases.

The phase-to-phase undervoltage protection can also be blocked via a binary input „>Uphph<(<) BLK“. There is an automatic blocking if the measuring voltage failure was detected or voltage mcb tripping was indicated (internal blocking of the phases affected by the voltage failure).

During single-pole dead time for automatic reclosure the stages of the undervoltage protection are automatically blocked in the disconnected phase so that they do not respond to the undervoltage of the disconnected phase provided that the voltage transformers are located on the outgoing side. Only such stages are blocked during the single-pole dead time that can actually initiate tripping according to their setting.

Undervoltage positive sequence system U_1

The device calculates the positive sequence system according to its defining equation

$$\underline{U}_1 = {}^1/_3 \cdot (\underline{U}_{L1} + \underline{a} \cdot \underline{U}_{L2} + \underline{a}^2 \cdot \underline{U}_{L3})$$

where $\underline{a} = e^{j120^\circ}$.

The resulting positive sequence voltage is fed to the two threshold stages **U1<** (address 3772) and **U1<<** (address 3774 (see Figure 2-131). Combined with the associated time delays **T U1<** (address 3773) and **T U1<<** (address 3775). these stages form a two-stage undervoltage protection for the positive sequence system.

The current can be used as an additional criterion for the undervoltage protection of the positive sequence system (current supervision **CURR.SUP.U1<**, address 3778). An undervoltage is only detected if the current flow is detected in at least one phase together with the undervoltage criterion.

The undervoltage protection for the positive sequence system can be blocked via the binary input „>U1<(<) BLK“. The stages of the undervoltage protection are automatically blocked if voltage failure is detected („Fuse Failure Monitor“, also see Section 2.19.1) or, if the trip of the mcb for the voltage transformer is indicated via the binary input „>FAIL:Feeder VT“.

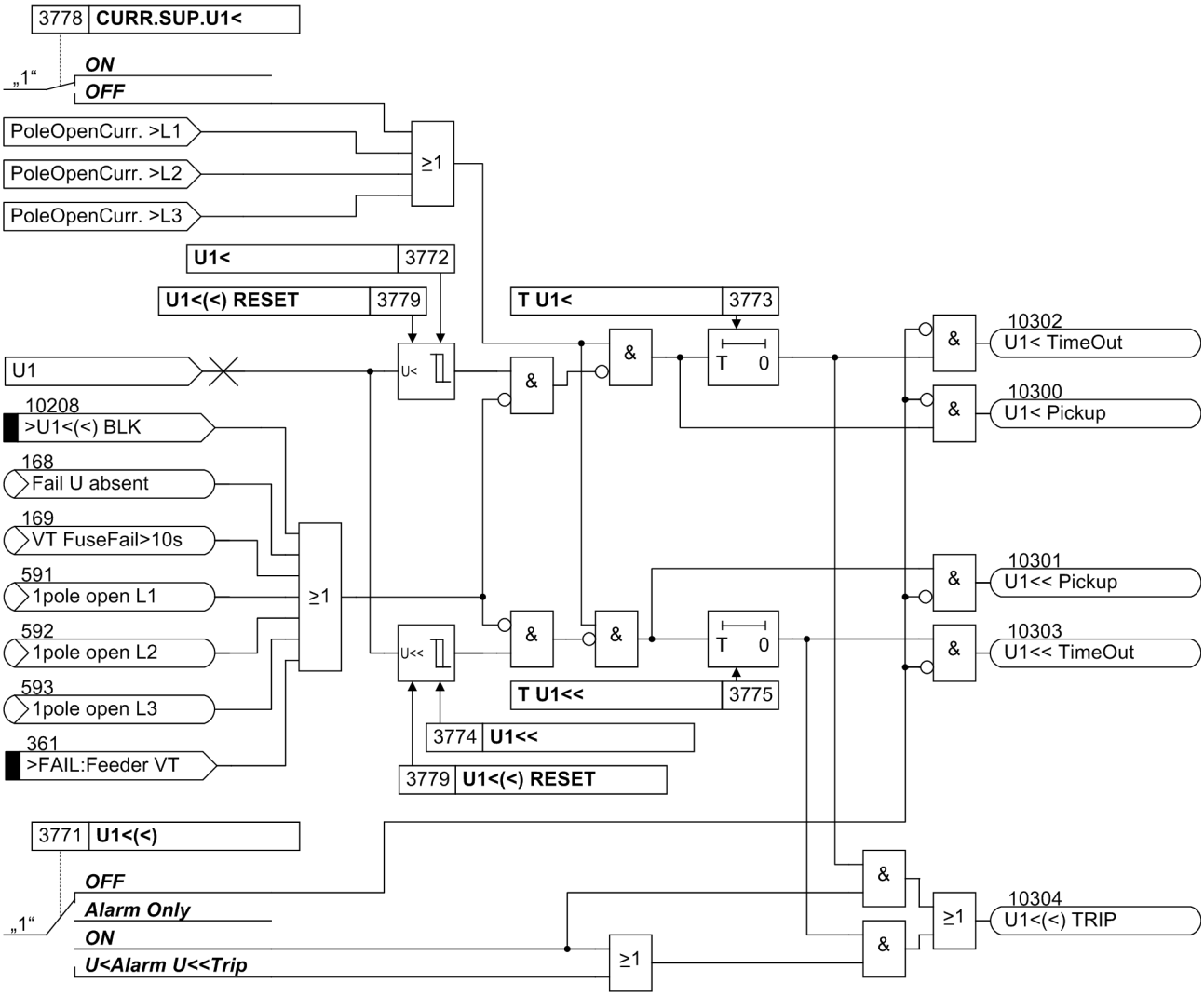

Figure 2-131 Logic diagram of the undervoltage protection for positive sequence voltage system

During single-pole dead time for automatic reclosure, the stages of positive sequence undervoltage protection are automatically blocked in the positive sequence system. In this way, the stages do not respond to the reduced positive sequence voltage caused by the disconnected phase in case the voltage transformers are located on the outgoing side.

2.15.3 Setting Notes

General

The voltage protection can only operate if, when configuring the device scope (address 137), it has been set to ***Enabled***. Compounding is only available if (address 137) is set to ***Enabl. w. comp.***.

The overvoltage and undervoltage stages can detect phase-to-earth voltages, phase-to-phase voltages or the positive sequence voltages; for overvoltage also the negative sequence voltage, zero-sequence voltage or a different single-phase voltage can be used. Any combination is possible. Stages that are not required are switched ***OFF***.

Note

For overvoltage protection it is particularly important to observe the setting notes: NEVER set an overvoltage stage (U_{L-E}, U_{L-L}, U_1) lower than an undervoltage stage. This would put the device immediately into a state of permanent pickup which cannot be reset by any measured value operation. As a result, operation of the device would be impossible!

Phase-to-earth overvoltage

The phase voltage stages can be switched ***ON*** or ***OFF*** in address 3701 **Uph-e>(>)**. In addition to this, you can set ***Alarm Only***, i.e. these stages operate and send alarms but do not generate any trip command. The setting ***U>Alarm U>>Trip*** creates in addition also a trip command only for the U>> stage.

The settings of the voltage threshold and the timer values depend on the type of application. To detect steady-state overvoltages on long lines carrying no load, set the **Uph-e>** stage (address 3702) to at least 5 % above the maximum stationary phase-to-earth voltage expected during operation. Additionally, a high dropout to pickup ratio is required (address 3709 **Uph-e>(>) RESET** = 0.98 presetting). This parameter can only be changed in DIGSI at **Display Additional Settings**. The delay time **T Uph-e>** (address 3703) should be a few seconds so that overvoltages with short duration do not cause tripping.

The U_{ph}>> stage (address 3704) is provided for high overvoltages with short duration. Here an adequately high pickup value is set, e.g. the $1^1/_2$-fold of the nominal phase-to-earth voltage. 0.1 s to 0.2 s are sufficient for the delay time **T Uph-e>>** (address 3705).

Phase-to-phase overvoltage

Basically, the same considerations apply as for the phase voltage stages. These stages can be used instead of the phase voltage stages or additionally. Depending on your choice, set address 3711 **Uph-ph>(>)** to ***ON***, ***OFF***, ***Alarm Only*** or ***U>Alarm U>>Trip***.

As phase-to-phase voltages are monitored, the phase-to-phase values are used for the settings **Uph-ph>** (address 3712) and **Uph-ph>>** (address 3714).

For the delay times **T Uph-ph>** (address 3713) and **T Uph-ph>>** (address 3715) the same considerations apply as above. The same is true for the dropout ratios (address 3719 **Uphph>(>) RESET**). The latter setting can only be altered in DIGSI at **Display Additional Settings**.

Overvoltage positive sequence system U_1

You can use the positive sequence voltage stages instead of or in addition to previously mentioned overvoltage stages. Depending on your choice, set address 3731 **U1>(>)** to ***ON***, ***OFF***, ***Alarm Only*** or ***U>Alarm U>>Trip***.

For symmetrical voltages an increase of the positive sequence system corresponds to an AND gate of the voltages. These stages are particularly suited to the detection of steady-state overvoltages on long, weak-loaded transmission lines (Ferranti effect). Here too, the **U1>** stage (address 3732) with a longer delay time **T U1>** (address 3733) is used for the detection of steady-state overvoltages (some seconds), the **U1>>** stage (address 3734) with the short delay time **T U1>>** (address 3735) is used for the detection of high overvoltages that may jeopardise insulation.

Note that the positive sequence system is established according to its defining equation $U_1 = {}^1\!/_3 \cdot |\underline{U}_{L1} + \underline{a} \cdot \underline{U}_{L2} + \underline{a}^2 \cdot \underline{U}_{L3}|$. For symmetrical voltages this is equivalent to a phase-to-earth voltage.

If the voltage at the remote line end is to be decisive for overvoltage detection, you can use the compounding feature. This requires that address 137 **U/O VOLTAGE** is already set to ***Enabl. w. comp.*** (enabled with compounding) when configuring the protection functions (Section 2.1.1.2).

In addition, the compounding feature needs the line data which have been set in the **Power System Data 2** (Section 2.1.4.1): at address 1110 or 1112 **x'**, address 1114 or 1115 **c'** and address 1111 or 1113 **Line Length** and address 1105 **Line Angle**. These data are vital for a correct compounding calculation. If the values provided here do not correspond to real conditions, the compounding may calculate a too high voltage at the remote end causing the protection to pick up immediately as soon as the measured values are applied. In this case, the pickup state can only be reset by switching off the measuring voltage.

Compounding can be switched ***ON*** or ***OFF*** separately for each of the U1 stages: for the **U1>** stage at address 3736 **U1> Compound** and for the **U1>>** stage at address 3737 **U1>> Compound**.

The dropout to pickup ratio (address 3739 **U1>(>) RESET**) is set as high as possible with regard to the detection of even small steady-state overvoltages. This parameter can only be altered in DIGSI at **Display Additional Settings**.

Overvoltage negative sequence system U_2

The negative sequence voltage stages detect asymmetrical voltages. If such voltages should cause tripping, set address 3741 **U2>(>)** to ***ON***. Or you can set address 3741 **U2>(>)** to ***Alarm Only***. In this case the condition will be reported but no trip signal will be generated. If only one stage is desired to generate a trip command, choose the setting ***U>Alarm U>>Trip***. With this setting a trip command is output by the 2nd stage only. If negative sequence voltage protection is not required, set this parameter to ***OFF***.

This protection function also has two stages, one being **U2>** (address 3742) with a greater time delay **T U2>** (address 3743) for steady-state asymmetrical voltages and the other being **U2>>** (address 3744) with a short delay time **T U2>>** (address 3745) for high asymmetrical voltages.

Note that the negative sequence system is calculated according to its defining equation $U_2 = \frac{1}{3}\cdot|\underline{U}_{L1} + \underline{a}^2\cdot\underline{U}_{L2} + \underline{a}\cdot\underline{U}_{L3}|$. For symmetrical voltages and two swapped phases this is equivalent to the phase-to-earth voltage value.

The dropout to pickup ratio **U2>(>) RESET** can be set in address 3749. This parameter can only be altered in DIGSI at **Display Additional Settings**.

Overvoltage zero-sequence system

The zero-sequence voltage stages can be switched ***ON*** or ***OFF*** in address 3721 **3U0>(>) (or Ux)**. They can also be set to ***Alarm Only***, i.e. these stages operate and send alarms but do not generate any trip commands. If a trip command of the 2nd stage is still desired, the setting must be ***U>Alarm U>>Trip***. This protection function can be used for any other single-phase voltage which is connected to the fourth voltage measurement input U_4. Also refer to Section 2.1.2.1 and see margin heading „Voltage Transformer Connection“.

This protection function also has two stages. The settings of the voltage threshold and the timer values depend on the type of application. Therefore, no general guidelines can be established. The **3U0>** stage (address 3722) is usually set with a high sensitivity and a longer delay time **T 3U0>** (address 3723). The **3U0>>** stage (address 3724) and its delay time **T 3U0>>** (address 3725) enables a second stage to be implemented with less sensitivity and a shorter delay time.

Similar considerations apply if this voltage stage is used for a different voltage at the measuring input U_4.

The zero-voltage stages feature a special time stabilisation due to repeated measurements allowing them to be set rather sensitive. This stabilisation can be disabled in address 3728 **3U0>(>) Stabil.** if a shorter pickup time is required. This parameter can only be altered in DIGSI at **Display Additional Settings**. Please consider that sensitive settings combined with short pickup times are not recommended.

The dropout to pickup ratio **3U0>(>) RESET** can be set in address 3729. This parameter can only be altered in DIGSI at **Display Additional Settings**.

When setting the voltage values please observe the following:

- If the U_{en} voltage of the set of voltage transformers is connected to U_4 and if this was already set in the Power System Data 1 (refer also to Section 2.1.2.1 under margin heading „Voltage Connection“, address 210 **U4 transformer** = ***Udelta transf.***), the device multiplies this voltage by the matching ratio **Uph / Udelta** (address 211), usually with 1.73. Therefore the voltage measured is $\sqrt{3}\cdot U_{en} = 3\cdot U_0$. When the voltage triangle is fully displaced, the voltage will be $\sqrt{3}$ times the phase-to-phase voltage.
- If any other voltage is connected to U_4, which is not used for voltage protection, and if this was already set in the Power System Data 1 (refer also to Section 2.1.2.1 under margin heading „Voltage Connection“, e.g. **U4 transformer** = ***Usy2 transf.*** or **U4 transformer** = ***Not connected***), the device calculates the zero-sequence voltage from the phase voltages according to its definition $3\cdot U_0 = |\underline{U}_{L1} + \underline{U}_{L2} + \underline{U}_{L3}|$. When the voltage triangle is fully displaced, the voltage will be $\sqrt{3}$ times the phase-to-phase voltage.
- If any other voltage is connected to U_4 , which is used for voltage protection, and if this was already set in the Power System Data 1 (refer also to Section 2.1.2.1, under margin heading „Voltage Connection“, **U4 transformer** = ***Ux transformer***), this voltage will be used for the voltage stages without any further factors. This „zero-sequence voltage protection“ then is, in reality, a single-phase voltage protection for any kind of voltage at U_4. Note that with a sensitive setting, i.e. close to operational values that are to be expected, not only the time delay **T 3U0>** (address 3723) must be greater, but also the reset ratio **3U0>(>) RESET** (address 3729) must be set as high as possible.

Phase-to-earth undervoltage

The phase voltage stages can be switched ***ON*** or ***OFF*** in address 3751 **Uph-e<(<)**. In addition to this, you can set ***Alarm Only***, i.e. these stages operate and send alarms but do not generate any trip command. You can generate a trip command for the 2nd stage only in addition to the alarm by setting ***U<Alarm U<<Trip***.

This undervoltage protection function has two stages. The **Uph-e<** stage (address 3752) with a longer setting of the time **T Uph-e<** (address 3753) operates in the case of minor undervoltages. However, the value set here must not be higher than the undervoltage permissible in operation. In the presence of higher voltage dips, the **Uph-e<<** stage (address 3754) with the delay **T Uph-e<<** (address 3755) becomes active.

The dropout to pickup ratio **Uph-e<(<) RESET** can be set in address 3759. This parameter can only be altered in DIGSI at **Display Additional Settings**.

The settings of the voltages and times depend on the intended use; therefore no general recommendations for the settings can be given. For load shedding, for example, the values are often determined by a priority grading coordination chart. In case of stability problems, the permissible levels and durations of overvoltages must be observed. With induction machines undervoltages have an effect on the permissible torque thresholds.

If the voltage transformers are located on the line side, the measuring voltages will be missing when the line is disconnected. To avoid that the undervoltage levels in these cases are or remain picked up, the current criterion **CURR.SUP. Uphe<** (address 3758) is switched ***ON***. With busbar side voltage transformers it can be switched ***OFF***. However, if the busbar is dead, the undervoltage protection will pick up and expire and then remain in a picked-up state. It must therefore be ensured in such cases that the protection is blocked by a binary input.

Phase-to-phase undervoltage

Basically, the same considerations apply as for the phase voltage stages. These stages may replace the phase voltage stages or be used additionally. Depending on your choice, set address 3761 **Uph-ph<(<)** to ***ON***, ***OFF***, ***Alarm Only*** or ***U<Alarm U<<Trip***.

As phase-to-phase voltages are monitored, the phase-to-phase values are used for the settings **Uph-ph<** (address 3762) and **Uph-ph<<** (address 3764).

The corresponding time delays are **T Uph-ph<** (address 3763) and **T Uphph<<** (address 3765).

The dropout to pickup ratio **Uphph<(<) RESET** can be set in address 3769. This parameter can only be altered in DIGSI at **Display Additional Settings**.

If the voltage transformers are located on the line side, the measuring voltages will be missing when the line is disconnected. To avoid that the undervoltage levels in these cases are or remain picked up, the current criterion **CURR.SUP.Uphph<** (address 3768) is switched ***ON***. With busbar side voltage transformers it can be switched ***OFF***. However, if the busbar is dead, the undervoltage protection will pick up and expire and then remain in a picked-up state. It must therefore be ensured in such cases that the protection is blocked by a binary input.

Undervoltage positive sequence system U_1

The positive sequence undervoltage stages can be used instead of or in addition to previously mentioned undervoltage stages. Depending on your choice, set address 3771 **U1<(<)** to ***ON***, ***OFF***, ***Alarm Only*** or ***U<Alarm U<<Trip***.

Basically, the same considerations apply as for the other undervoltage stages. Especially in case of stability problems, the positive sequence system is advantageous, since the positive sequence system is relevant for the limit of the stable energy transmission.

To achieve the two-stage condition, the **U1<** stage (address 3772) is combined with a greater time delay **T U1<** (address 3773), and the **U1<<** stage (address 3774) with a shorter time delay **T U1<<** (address 3775).

Note that the positive sequence system is calculated according to its defining equation $U_1 = \frac{1}{3}\cdot|\underline{U}_{L1} + \underline{a}\cdot\underline{U}_{L2} + \underline{a}^2\cdot\underline{U}_{L3}|$. For symmetrical voltages this is equivalent to a phase-to-earth voltage.

The dropout to pickup ratio **U1<(<) RESET** can be set in address 3779. This parameter can only be altered in DIGSI at **Display Additional Settings**.

If the voltage transformers are located on the line side, the measuring voltages will be missing when the line is disconnected. To avoid that the undervoltage levels in these cases are or remain picked up, the current criterion **CURR.SUP.U1<** (address 3778) is switched ***ON***. With busbar side voltage transformers it can be switched ***OFF***. However, if the busbar is dead, the undervoltage protection will pick up and expire and then remain in a picked-up state. It must therefore be ensured in such cases that the protection is blocked by a binary input.

2.15.4 Settings

Addresses which have an appended "A" can only be changed with DIGSI, under Additional Settings.

Addr.	Parameter	Setting Options	Default Setting	Comments
3701	Uph-e>(>)	OFF Alarm Only ON U>Alarm U>>Trip	OFF	Operating mode Uph-e overvoltage prot.
3702	Uph-e>	1.0 .. 170.0 V; ∞	85.0 V	Uph-e> Pickup
3703	T Uph-e>	0.00 .. 100.00 sec; ∞	2.00 sec	T Uph-e> Time Delay
3704	Uph-e>>	1.0 .. 170.0 V; ∞	100.0 V	Uph-e>> Pickup
3705	T Uph-e>>	0.00 .. 100.00 sec; ∞	1.00 sec	T Uph-e>> Time Delay
3709A	Uph-e>(>) RESET	0.30 .. 0.99	0.98	Uph-e>(>) Reset ratio
3711	Uph-ph>(>)	OFF Alarm Only ON U>Alarm U>>Trip	OFF	Operating mode Uph-ph overvoltage prot.
3712	Uph-ph>	2.0 .. 220.0 V; ∞	150.0 V	Uph-ph> Pickup
3713	T Uph-ph>	0.00 .. 100.00 sec; ∞	2.00 sec	T Uph-ph> Time Delay
3714	Uph-ph>>	2.0 .. 220.0 V; ∞	175.0 V	Uph-ph>> Pickup

Addr.	Parameter	Setting Options	Default Setting	Comments
3715	T Uph-ph>>	0.00 .. 100.00 sec; ∞	1.00 sec	T Uph-ph>> Time Delay
3719A	Uphph>(>) RESET	0.30 .. 0.99	0.98	Uph-ph>(>) Reset ratio
3721	3U0>(>) (or Ux)	OFF Alarm Only ON U>Alarm U>>Trip	OFF	Operating mode 3U0 (or Ux) overvoltage
3722	3U0>	1.0 .. 220.0 V; ∞	30.0 V	3U0> Pickup (or Ux>)
3723	T 3U0>	0.00 .. 100.00 sec; ∞	2.00 sec	T 3U0> Time Delay (or T Ux>)
3724	3U0>>	1.0 .. 220.0 V; ∞	50.0 V	3U0>> Pickup (or Ux>>)
3725	T 3U0>>	0.00 .. 100.00 sec; ∞	1.00 sec	T 3U0>> Time Delay (or T Ux>>)
3728A	3U0>(>) Stabil.	ON OFF	ON	3U0>(>): Stabilization 3U0-Measurement
3729A	3U0>(>) RESET	0.30 .. 0.99	0.95	3U0>(>) Reset ratio (or Ux)
3731	U1>(>)	OFF Alarm Only ON U>Alarm U>>Trip	OFF	Operating mode U1 overvoltage prot.
3732	U1>	2.0 .. 220.0 V; ∞	150.0 V	U1> Pickup
3733	T U1>	0.00 .. 100.00 sec; ∞	2.00 sec	T U1> Time Delay
3734	U1>>	2.0 .. 220.0 V; ∞	175.0 V	U1>> Pickup
3735	T U1>>	0.00 .. 100.00 sec; ∞	1.00 sec	T U1>> Time Delay
3736	U1> Compound	OFF ON	OFF	U1> with Compounding
3737	U1>> Compound	OFF ON	OFF	U1>> with Compounding
3739A	U1>(>) RESET	0.30 .. 0.99	0.98	U1>(>) Reset ratio
3741	U2>(>)	OFF Alarm Only ON U>Alarm U>>Trip	OFF	Operating mode U2 overvoltage prot.
3742	U2>	2.0 .. 220.0 V; ∞	30.0 V	U2> Pickup
3743	T U2>	0.00 .. 100.00 sec; ∞	2.00 sec	T U2> Time Delay
3744	U2>>	2.0 .. 220.0 V; ∞	50.0 V	U2>> Pickup
3745	T U2>>	0.00 .. 100.00 sec; ∞	1.00 sec	T U2>> Time Delay
3749A	U2>(>) RESET	0.30 .. 0.99	0.98	U2>(>) Reset ratio
3751	Uph-e<(<)	OFF Alarm Only ON U<Alarm U<<Trip	OFF	Operating mode Uph-e undervoltage prot.
3752	Uph-e<	1.0 .. 100.0 V; 0	30.0 V	Uph-e< Pickup
3753	T Uph-e<	0.00 .. 100.00 sec; ∞	2.00 sec	T Uph-e< Time Delay
3754	Uph-e<<	1.0 .. 100.0 V; 0	10.0 V	Uph-e<< Pickup
3755	T Uph-e<<	0.00 .. 100.00 sec; ∞	1.00 sec	T Uph-e<< Time Delay

Addr.	Parameter	Setting Options	Default Setting	Comments
3758	CURR.SUP. Uphe<	ON OFF	ON	Current supervision (Uph-e)
3759A	Uph-e<(<) RESET	1.01 .. 1.20	1.05	Uph-e<(<) Reset ratio
3761	Uph-ph<(<)	OFF Alarm Only ON U<Alarm U<<Trip	OFF	Operating mode Uph-ph under-voltage prot.
3762	Uph-ph<	1.0 .. 175.0 V; 0	50.0 V	Uph-ph< Pickup
3763	T Uph-ph<	0.00 .. 100.00 sec; ∞	2.00 sec	T Uph-ph< Time Delay
3764	Uph-ph<<	1.0 .. 175.0 V; 0	17.0 V	Uph-ph<< Pickup
3765	T Uphph<<	0.00 .. 100.00 sec; ∞	1.00 sec	T Uph-ph<< Time Delay
3768	CURR.SUP.Uphph<	ON OFF	ON	Current supervision (Uph-ph)
3769A	Uphph<(<) RESET	1.01 .. 1.20	1.05	Uph-ph<(<) Reset ratio
3771	U1<(<)	OFF Alarm Only ON U<Alarm U<<Trip	OFF	Operating mode U1 undervoltage prot.
3772	U1<	1.0 .. 100.0 V; 0	30.0 V	U1< Pickup
3773	T U1<	0.00 .. 100.00 sec; ∞	2.00 sec	T U1< Time Delay
3774	U1<<	1.0 .. 100.0 V; 0	10.0 V	U1<< Pickup
3775	T U1<<	0.00 .. 100.00 sec; ∞	1.00 sec	T U1<< Time Delay
3778	CURR.SUP.U1<	ON OFF	ON	Current supervision (U1)
3779A	U1<(<) RESET	1.01 .. 1.20	1.05	U1<(<) Reset ratio

2.15.5 Information List

No.	Information	Type of Information	Comments
234.2100	U<, U> blk	IntSP	U<, U> blocked via operation
10201	>Uph-e>(>) BLK	SP	>BLOCK Uph-e>(>) Overvolt. (phase-earth)
10202	>Uph-ph>(>) BLK	SP	>BLOCK Uph-ph>(>) Overvolt (phase-phase)
10203	>3U0>(>) BLK	SP	>BLOCK 3U0>(>) Overvolt. (zero sequence)
10204	>U1>(>) BLK	SP	>BLOCK U1>(>) Overvolt. (positive seq.)
10205	>U2>(>) BLK	SP	>BLOCK U2>(>) Overvolt. (negative seq.)
10206	>Uph-e<(<) BLK	SP	>BLOCK Uph-e<(<) Undervolt (phase-earth)
10207	>Uphph<(<) BLK	SP	>BLOCK Uphph<(<) Undervolt (phase-phase)
10208	>U1<(<) BLK	SP	>BLOCK U1<(<) Undervolt (positive seq.)
10215	Uph-e>(>) OFF	OUT	Uph-e>(>) Overvolt. is switched OFF
10216	Uph-e>(>) BLK	OUT	Uph-e>(>) Overvolt. is BLOCKED
10217	Uph-ph>(>) OFF	OUT	Uph-ph>(>) Overvolt. is switched OFF
10218	Uph-ph>(>) BLK	OUT	Uph-ph>(>) Overvolt. is BLOCKED
10219	3U0>(>) OFF	OUT	3U0>(>) Overvolt. is switched OFF

No.	Information	Type of Information	Comments
10220	3U0>(>) BLK	OUT	3U0>(>) Overvolt. is BLOCKED
10221	U1>(>) OFF	OUT	U1>(>) Overvolt. is switched OFF
10222	U1>(>) BLK	OUT	U1>(>) Overvolt. is BLOCKED
10223	U2>(>) OFF	OUT	U2>(>) Overvolt. is switched OFF
10224	U2>(>) BLK	OUT	U2>(>) Overvolt. is BLOCKED
10225	Uph-e<(<) OFF	OUT	Uph-e<(<) Undervolt. is switched OFF
10226	Uph-e<(<) BLK	OUT	Uph-e<(<) Undervolt. is BLOCKED
10227	Uph-ph<(<) OFF	OUT	Uph-ph<(<) Undervolt. is switched OFF
10228	Uph-ph<(<) BLK	OUT	Uphph<(<) Undervolt. is BLOCKED
10229	U1<(<) OFF	OUT	U1<(<) Undervolt. is switched OFF
10230	U1<(<) BLK	OUT	U1<(<) Undervolt. is BLOCKED
10231	U</> ACTIVE	OUT	Over-/Under-Voltage protection is ACTIVE
10240	Uph-e> Pickup	OUT	Uph-e> Pickup
10241	Uph-e>> Pickup	OUT	Uph-e>> Pickup
10242	Uph-e>(>) PU L1	OUT	Uph-e>(>) Pickup L1
10243	Uph-e>(>) PU L2	OUT	Uph-e>(>) Pickup L2
10244	Uph-e>(>) PU L3	OUT	Uph-e>(>) Pickup L3
10245	Uph-e> TimeOut	OUT	Uph-e> TimeOut
10246	Uph-e>> TimeOut	OUT	Uph-e>> TimeOut
10247	Uph-e>(>) TRIP	OUT	Uph-e>(>) TRIP command
10248	Uph-e> PU L1	OUT	Uph-e> Pickup L1
10249	Uph-e> PU L2	OUT	Uph-e> Pickup L2
10250	Uph-e> PU L3	OUT	Uph-e> Pickup L3
10251	Uph-e>> PU L1	OUT	Uph-e>> Pickup L1
10252	Uph-e>> PU L2	OUT	Uph-e>> Pickup L2
10253	Uph-e>> PU L3	OUT	Uph-e>> Pickup L3
10255	Uphph> Pickup	OUT	Uph-ph> Pickup
10256	Uphph>> Pickup	OUT	Uph-ph>> Pickup
10257	Uphph>(>)PU L12	OUT	Uph-ph>(>) Pickup L1-L2
10258	Uphph>(>)PU L23	OUT	Uph-ph>(>) Pickup L2-L3
10259	Uphph>(>)PU L31	OUT	Uph-ph>(>) Pickup L3-L1
10260	Uphph> TimeOut	OUT	Uph-ph> TimeOut
10261	Uphph>> TimeOut	OUT	Uph-ph>> TimeOut
10262	Uphph>(>) TRIP	OUT	Uph-ph>(>) TRIP command
10263	Uphph> PU L12	OUT	Uph-ph> Pickup L1-L2
10264	Uphph> PU L23	OUT	Uph-ph> Pickup L2-L3
10265	Uphph> PU L31	OUT	Uph-ph> Pickup L3-L1
10266	Uphph>> PU L12	OUT	Uph-ph>> Pickup L1-L2
10267	Uphph>> PU L23	OUT	Uph-ph>> Pickup L2-L3
10268	Uphph>> PU L31	OUT	Uph-ph>> Pickup L3-L1
10270	3U0> Pickup	OUT	3U0> Pickup
10271	3U0>> Pickup	OUT	3U0>> Pickup
10272	3U0> TimeOut	OUT	3U0> TimeOut
10273	3U0>> TimeOut	OUT	3U0>> TimeOut
10274	3U0>(>) TRIP	OUT	3U0>(>) TRIP command
10280	U1> Pickup	OUT	U1> Pickup

No.	Information	Type of Information	Comments
10281	U1>> Pickup	OUT	U1>> Pickup
10282	U1> TimeOut	OUT	U1> TimeOut
10283	U1>> TimeOut	OUT	U1>> TimeOut
10284	U1>(>) TRIP	OUT	U1>(>) TRIP command
10290	U2> Pickup	OUT	U2> Pickup
10291	U2>> Pickup	OUT	U2>> Pickup
10292	U2> TimeOut	OUT	U2> TimeOut
10293	U2>> TimeOut	OUT	U2>> TimeOut
10294	U2>(>) TRIP	OUT	U2>(>) TRIP command
10300	U1< Pickup	OUT	U1< Pickup
10301	U1<< Pickup	OUT	U1<< Pickup
10302	U1< TimeOut	OUT	U1< TimeOut
10303	U1<< TimeOut	OUT	U1<< TimeOut
10304	U1<(<) TRIP	OUT	U1<(<) TRIP command
10310	Uph-e< Pickup	OUT	Uph-e< Pickup
10311	Uph-e<< Pickup	OUT	Uph-e<< Pickup
10312	Uph-e<(<) PU L1	OUT	Uph-e<(<) Pickup L1
10313	Uph-e<(<) PU L2	OUT	Uph-e<(<) Pickup L2
10314	Uph-e<(<) PU L3	OUT	Uph-e<(<) Pickup L3
10315	Uph-e< TimeOut	OUT	Uph-e< TimeOut
10316	Uph-e<< TimeOut	OUT	Uph-e<< TimeOut
10317	Uph-e<(<) TRIP	OUT	Uph-e<(<) TRIP command
10318	Uph-e< PU L1	OUT	Uph-e< Pickup L1
10319	Uph-e< PU L2	OUT	Uph-e< Pickup L2
10320	Uph-e< PU L3	OUT	Uph-e< Pickup L3
10321	Uph-e<< PU L1	OUT	Uph-e<< Pickup L1
10322	Uph-e<< PU L2	OUT	Uph-e<< Pickup L2
10323	Uph-e<< PU L3	OUT	Uph-e<< Pickup L3
10325	Uph-ph< Pickup	OUT	Uph-ph< Pickup
10326	Uph-ph<< Pickup	OUT	Uph-ph<< Pickup
10327	Uphph<(<)PU L12	OUT	Uphph<(<) Pickup L1-L2
10328	Uphph<(<)PU L23	OUT	Uphph<(<) Pickup L2-L3
10329	Uphph<(<)PU L31	OUT	Uphph<(<) Pickup L3-L1
10330	Uphph< TimeOut	OUT	Uphph< TimeOut
10331	Uphph<< TimeOut	OUT	Uphph<< TimeOut
10332	Uphph<(<) TRIP	OUT	Uphph<(<) TRIP command
10333	Uphph< PU L12	OUT	Uph-ph< Pickup L1-L2
10334	Uphph< PU L23	OUT	Uph-ph< Pickup L2-L3
10335	Uphph< PU L31	OUT	Uph-ph< Pickup L3-L1
10336	Uphph<< PU L12	OUT	Uph-ph<< Pickup L1-L2
10337	Uphph<< PU L23	OUT	Uph-ph<< Pickup L2-L3
10338	Uphph<< PU L31	OUT	Uph-ph<< Pickup L3-L1

2.16 Frequency protection (optional)

The frequency protection function detects overfrequencies or underfrequencies in the system or in electrical machines. If the frequency is outside the permissible range, appropriate actions are initiated such as load shedding or separating the generator from the system.

Underfrequency is caused by increased real power demand of the loads or by a reduction of the generated power e.g. in the event of disconnection from the network, generator failure or faulty operation of the power frequency control. Underfrequency protection is also applied for generators which operate (temporarily) to an island network. This is due to the fact that the reverse power protection cannot operate in case of a drive power failure. The generator can be disconnected from the power system by means of the underfrequency protection. Underfrequency also results in increased reactive power demand of inductive loads.

Overfrequency is caused for instance by load shedding, system disconnection or malfunction of the power frequency control. There is also a risk of self-excitation for generators feeding long lines under no-load conditions.

2.16.1 Method of Operation

Frequency stages

Frequency protection consists of the four frequency stages f1 to f4 Each stage can be set as overfrequency stage (f>) or as underfrequency stage (f<) with individual thresholds and time delays. This enables the stages to be adapted to the particular application.

- If a stage is set to a value above the rated frequency, it is automatically interpreted to be an overfrequency stage f>.
- If a stage is set to a value below the rated frequency, it is automatically interpreted to be an underfrequency stage f<.
- If a stage is set exactly to the rated frequency, it is inactive.

Each stage can be blocked via binary input and also the entire frequency protection function can be blocked.

Frequency measurement

The largest of the 3 phase-to-phase voltages is used for frequency measurement. It must amount to at least 65 % of the nominal voltage set in parameter 204, **Unom SECONDARY**. Below that value frequency measurement will not take place.

Numerical filters are used to calculate a virtual quantity from the measured voltage. This quantity is proportional to the frequency and is practically linear in the specified range ($f_N \pm 10$ %). Filters and repeated measurements ensure that the frequency measurement is free from harmonic and phase jumps influences.

An accurate and quick measurement result is obtained by considering also the frequency change. When changing the frequency of the power system, the sign of the quotient $^{\Delta f}/_{dt}$ remains unchanged during several repeated measurements. If, however, a phase jump in the measured voltage temporarily simulates a frequency deviation, the sign of $^{\Delta f}/_{dt}$ will subsequently reverse. Thus the measurement results corrupted by a phase jump are quickly discarded.

The dropout value of each frequency element is approximately 20 mHz below (for f>) or above (for f<) of the pickup value.

Operating ranges

Frequency evaluation requires a measured quantity that can be processed. This implies that at least a sufficiently high voltage is available and that the frequency of this voltage is within the working range of the frequency protection.

The frequency protection automatically selects the largest of the phase-to-phase voltages. If all three voltages are below the operating range of 65 % · U_N (secondary), the frequency cannot be determined. In that case the indication 5215 „`Freq UnderV Blk`“ is displayed. If the voltage falls below this minimum value after a frequency stage has picked up, the picked up element will drop out. This implies also that all frequency stages will drop out after a line has been switched off (with voltage transformers on line side).

When connecting a measuring voltage with a frequency outside the configured threshold of a frequency stage, the frequency protection is immediately ready to operate. Since the filters of the frequency measurement must first go through a transient state, the command output time may increase slightly (approx. 1 period). This is because a frequency stage picks up only if the frequency has been detected outside the configured threshold in five consecutive measurements.

The frequency range is from 25 Hz to 70 Hz. If the frequency leaves this operating range, the frequency stages will drop out. If the frequency returns into the operating range, the measurement can be resumed provided that the measuring voltage is also inside the working range. But if the measuring voltage is switched off, the picked up stage will drop out immediately.

Power swings

In interconnected networks, frequency deviations may also be caused by power swings. Depending on the power swing frequency, the mounting location of the device and the setting of the frequency stages, power swings may cause the frequency protection to pickup and even to trip. In such cases out-of-step trips cannot be prevented by operating the distance protection with power swing blocking (see also Section 2.3). Rather, it is reasonable to block the frequency protection once power swings are detected. This can be accomplished via binary inputs and binary outputs or by corresponding logic operations using the user-defined logic (CFC). If, however, the power swing frequencies are known, tripping of the frequency protection function can also be avoided by adapting the delay times of the frequency protection correspondingly.

Pickup/tripping

Figure 2-132 shows the logic diagram for the frequency protection function.

Once the frequency was reliably detected to be outside the configured thresholds of a stage (above the setting value for f> stages or below for f< stages), a pickup signal of the corresponding stage is generated. The decision is considered reliable if five measurements taken in intervals of $^1/_2$ period yield one frequency outside the set threshold.

After pickup, one delay time per stage can be started. When the associated time has elapsed, one trip command per stage is issued. A picked up stage drops out if the cause of the pickup is no longer valid after five measurements or if the measuring voltage was switched off or the frequency is outside the operating range. When a frequency stage drops out, the tripping signal of of the corresponding frequency stage is immediately terminated, but the trip command is maintained for at least the minimum command duration which was set for all tripping functions of the device.

Each of the four frequency stages can be blocked individually by binary inputs. The blocking takes immediate effect. It is also possible to block the entire frequency protection function via binary input.

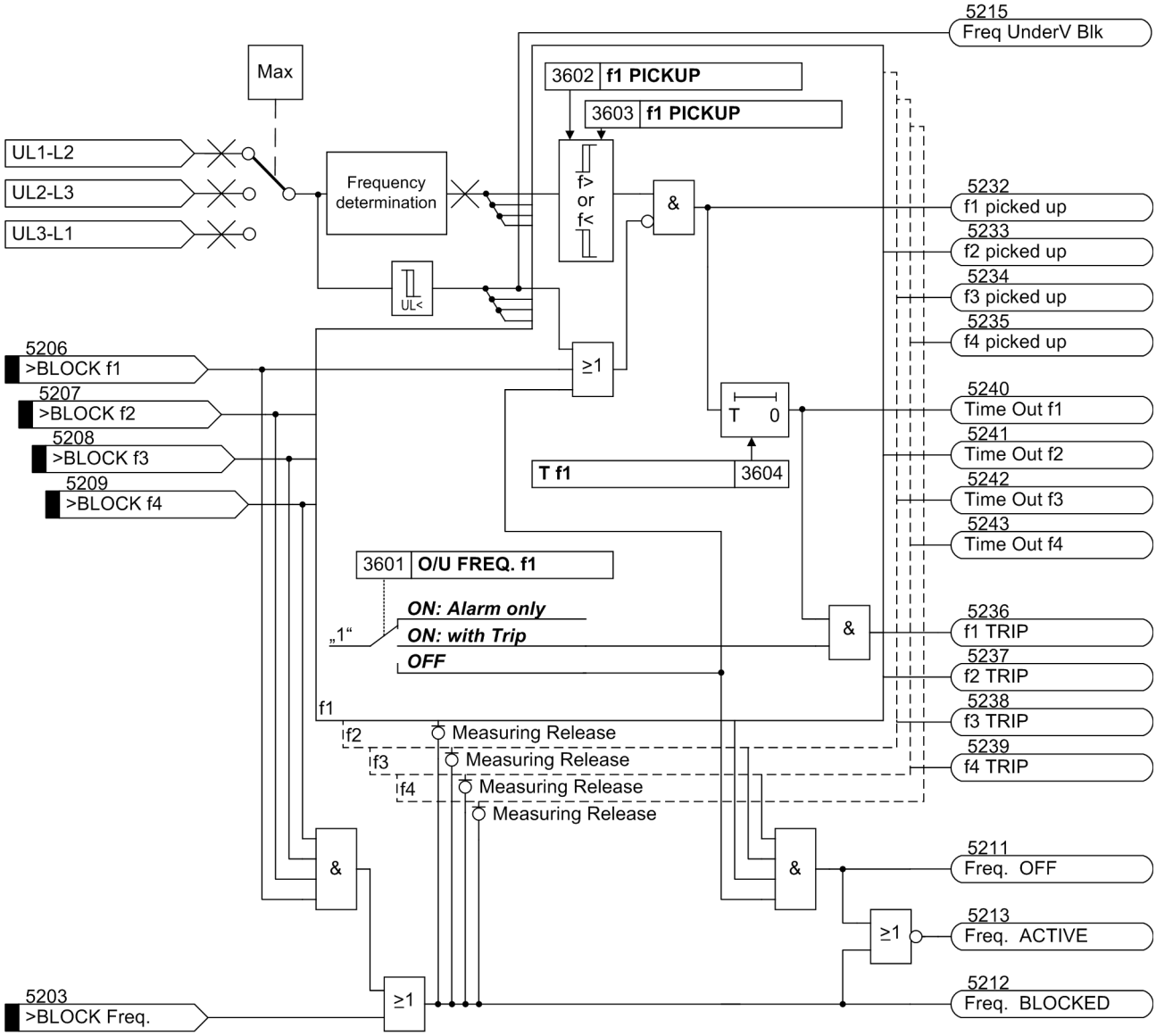

Figure 2-132 Logic diagram of the frequency protection

2.16.2 Setting Notes

General

Frequency protection is only in effect and accessible if address 136 **FREQUENCY Prot.** is set to ***Enabled*** during configuration of protection functions. If the function is not required, ***Disabled*** is to be set.

The frequency protection function features 4 frequency stages f1 to f4 each of which can function as overfrequency stage or underfrequency stage. Each stage can be set active or inactive. This is set in addresses:

- 3601 **O/U FREQ. f1** for frequency stage f1,
- 3611 **O/U FREQ. f2** for frequency stage f2,
- 3621 **O/U FREQ. f3** for frequency stage f3,
- 3631 **O/U FREQ. f4** for frequency stage f4,

The following 3 options are available:

- Stage ***OFF***: The stage is ineffective;
- Stage ***ON: with Trip***: The stage is effective and issues an alarm and a trip command (after time has expired) following irregular frequency deviations;
- Stage ***ON: Alarm only***: The stage is effective and issues an alarm but no trip command following irregular frequency deviations.

Pickup values, delay time

The configured pickup value determines whether a frequency stage is to respond to overfrequency or underfrequency.

- If a stage is set to a value above the rated frequency, it is automatically interpreted to be an overfrequency stage f>.
- If a stage is set to a value below the rated frequency, it is automatically interpreted to be an underfrequency stage f<.
- If a stage is set exactly to the rated frequency, it is inactive.

A pickup value can be set for each stage according to above rules. The addresses and possible setting ranges are determined by the nominal frequency as configured in the Power System Data 1 (Section 2.1.2.1) in **Rated Frequency** (address 230).

Please note that none of the frequency stages is set to less than 30 mHz above (for f>) or below (for f<) the nominal frequency. Since the frequency stages have a hysteresis of approx. 20°mHz, it may otherwise happen that the stage does not drop out when returning to the nominal frequency.

Only those addresses are accessible that match the configured nominal frequency. For each element, a trip delay time can be set:

- Address 3602 **f1 PICKUP** pickup value for frequency stage f1 at f_N = 50 Hz,
  Address 3603 **f1 PICKUP** pickup value for frequency stage f1 at f_N = 60 Hz,
  Address 3604 **T f1** trip delay for frequency stage f1;
- Address 3612 **f2 PICKUP** pickup value for frequency stage f2 at f_N = 50 Hz,
  Address 3613 **f2 PICKUP** pickup value for frequency stage f2 at f_N = 60 Hz,
  Address 3614 **T f2** trip delay for frequency element f2;
- Address 3622 **f3 PICKUP** pickup value for frequency stage f3 at f_N = 50 Hz,
  Address 3623 **f3 PICKUP** pickup value for frequency stage f3 at f_N = 60 Hz,
  Address 3624 **T f3** trip delay for frequency stage f3;
- Address 3632 **f4 PICKUP** pickup value for frequency stage f4 at f_N = 50 Hz,
  Address 3633 **f4 PICKUP** pickup value for frequency stage f4 at f_N = 60 Hz,
  Address 3634 **T f4** trip delay for frequency element f4.

The set times are additional delay times not including the operating times (measuring time, dropout time) of the protection function.

If underfrequency protection is used for load shedding purposes, then the frequency settings relative to other feeder relays are generally based on the priority of the customers served by the protection relay. Normally, it is required for load shedding a frecuency / time grading that takes into account the importance of the consumers or consumer groups.

In interconnected networks, frequency deviations may also be caused by power swings. Depending on the power swing frequency, the mounting location of the device and the setting of the frequency stages, it is reasonable to block the entire frequency protection function or single stages once a power swing has been detected. The delay times must then be co-ordinated thus that a power swing is detected before the frequency protection trips.

Further application examples exist in the field of power stations. The frequency values to be set mainly depend, also in these cases, on the specifications of the power system/power station operator. In this context, the underfrequency protection also ensures the power station's own demand by disconnecting it from the power system on time. The turbo regulator regulates the machine set to the nominal speed. Consequently, the station's own demands can be continuously supplied at nominal frequency.

Since the dropout threshold is 20 mHz below or above the trip frequency, the resulting „minimum“ trip frequency is 30 mHz above or below the nominal frequency.

A frequency increase can, for example, occur due to a load shedding or malfunction of the speed regulation (e.g. in a stand-alone system). In this way, the frequency protection can, for example, be used as overspeed protection.

2.16.3 Settings

Addr.	Parameter	Setting Options	Default Setting	Comments
3601	O/U FREQ. f1	ON: Alarm only ON: with Trip OFF	ON: Alarm only	Over/Under Frequency Protection stage f1
3602	f1 PICKUP	45.50 .. 54.50 Hz	49.50 Hz	f1 Pickup
3603	f1 PICKUP	55.50 .. 64.50 Hz	59.50 Hz	f1 Pickup
3604	T f1	0.00 .. 600.00 sec	60.00 sec	T f1 Time Delay
3611	O/U FREQ. f2	ON: Alarm only ON: with Trip OFF	ON: Alarm only	Over/Under Frequency Protection stage f2
3612	f2 PICKUP	45.50 .. 54.50 Hz	49.00 Hz	f2 Pickup
3613	f2 PICKUP	55.50 .. 64.50 Hz	57.00 Hz	f2 Pickup
3614	T f2	0.00 .. 600.00 sec	30.00 sec	T f2 Time Delay
3621	O/U FREQ. f3	ON: Alarm only ON: with Trip OFF	ON: Alarm only	Over/Under Frequency Protection stage f3
3622	f3 PICKUP	45.50 .. 54.50 Hz	47.50 Hz	f3 Pickup
3623	f3 PICKUP	55.50 .. 64.50 Hz	59.50 Hz	f3 Pickup
3624	T f3	0.00 .. 600.00 sec	3.00 sec	T f3 Time Delay
3631	O/U FREQ. f4	ON: Alarm only ON: with Trip OFF	ON: Alarm only	Over/Under Frequency Protection stage f4

Addr.	Parameter	Setting Options	Default Setting	Comments
3632	f4 PICKUP	45.50 .. 54.50 Hz	51.00 Hz	f4 Pickup
3633	f4 PICKUP	55.50 .. 64.50 Hz	62.00 Hz	f4 Pickup
3634	T f4	0.00 .. 600.00 sec	30.00 sec	T f4 Time Delay

2.16.4 Information List

No.	Information	Type of Information	Comments
5203	>BLOCK Freq.	SP	>BLOCK frequency protection
5206	>BLOCK f1	SP	>BLOCK frequency protection stage f1
5207	>BLOCK f2	SP	>BLOCK frequency protection stage f2
5208	>BLOCK f3	SP	>BLOCK frequency protection stage f3
5209	>BLOCK f4	SP	>BLOCK frequency protection stage f4
5211	Freq. OFF	OUT	Frequency protection is switched OFF
5212	Freq. BLOCKED	OUT	Frequency protection is BLOCKED
5213	Freq. ACTIVE	OUT	Frequency protection is ACTIVE
5215	Freq UnderV Blk	OUT	Frequency protection undervoltage Blk
5232	f1 picked up	OUT	Frequency protection: f1 picked up
5233	f2 picked up	OUT	Frequency protection: f2 picked up
5234	f3 picked up	OUT	Frequency protection: f3 picked up
5235	f4 picked up	OUT	Frequency protection: f4 picked up
5236	f1 TRIP	OUT	Frequency protection: f1 TRIP
5237	f2 TRIP	OUT	Frequency protection: f2 TRIP
5238	f3 TRIP	OUT	Frequency protection: f3 TRIP
5239	f4 TRIP	OUT	Frequency protection: f4 TRIP
5240	Time Out f1	OUT	Frequency protection: TimeOut Stage f1
5241	Time Out f2	OUT	Frequency protection: TimeOut Stage f2
5242	Time Out f3	OUT	Frequency protection: TimeOut Stage f3
5243	Time Out f4	OUT	Frequency protection: TimeOut Stage f4

2.17 Fault locator

The measurement of the distance to a fault is an important supplement to the protection functions. Availability of the line for power transmission within the system can be increased when the fault is located.

2.17.1 Functional Description

Initiation Conditions

The fault location function in the 7SA522 distance protection is independent of the distance measurement. It has a separate measured value memory and dedicated filter algorithms. The short-circuit protection merely has to provide a start command to determine the valid measuring loop and the best suited time interval for storing the measured quantities.

The fault location function can be triggered by the trip command of the short-circuit protection, or also by each fault detection. In the latter case, a fault location calculation is also possible if a different protection device clears the fault. For a fault outside the protected line, the fault location information is not always correct, as the measured values can be distorted by e.g. intermediate infeeds.

Determination of the Fault Location

The measured value pairs of fault currents and fault voltages (in intervals of 1/20 period) are stored in a cyclic buffer and frozen shortly after the trip command is issued before any distortion of the measured values occurs due to the opening of the circuit breaker even with very fast circuit breakers. Filtering of the measured values and the number of impedance calculations are automatically adapted to the number of stabilized measured value pairs in the determined data window. If a sufficient data window with stabilized values could not be determined, the annunciation „`Flt.Loc.invalid`“ is issued.

The evaluation of the measured values in the short-circuit loops is carried out after the short-circuit has been cleared. Short-circuit loops are those which caused the trip. In the event of tripping by the earth fault protection, the three phase–earth loops are evaluated.

Output of the Fault Locator

The fault locator issues the following results:

- The short-circuit loop which was used to determine the fault reactance,
- Fault reactance X in Ω primary and Ω secondary,
- Fault resistance R in Ω primary and Ω secondary,
- The distance to fault d in kilometers or miles of the line proportional to the reactance, converted on the basis of the set line reactance per unit line length,
- The distance to fault d in % of the line length, calculated on the basis of the set reactance per unit length and the set line length.

The fault location indicated in per cent can, at the same time, be output as BCD-code (Binary Coded Decimal). This, however, must have been preset in address 138 during the configuration of the protection functions (Section 2.1.1.2). A further prerequisite is that the required number of binary outputs is allocated for this purpose.

10 output relays are needed. They are classified as follows:

- 4 outputs for the units ($1 \cdot 2^0 + 1 \cdot 2^1 + 1 \cdot 2^2 + 1 \cdot 2^3$),
- 4 outputs for the tens ($10 \cdot 2^0 + 10 \cdot 2^1 + 10 \cdot 2^2 + 10 \cdot 2^3$),
- 1 output for the hundreds ($100 \cdot 2^0$),
- 1 output for the ready-state annunciation „`BCD dist. VALID`“ (No. 1152).

Once a fault was located, the corresponding binary outputs pick up. Then the output „BCD dist. VALID“ signals that the data are now valid. The duration can be set. In the event of a new fault, the data of the former fault are cleared automatically.

The output range extends from 0 % to 195 %. Output „197“ means that a negative fault was detected. Output „199“ describes an overflow, i. e. the calculated value is higher than the maximum possible value of 195 %.

Note

The distance information in kilometers, miles or percent is only accurate for homogenous line sections. If the line is made up of several sections with different reactances per unit length, e.g. overhead line-cable sections, the reactance calculated by the fault location function can be evaluated for a separate calculation of the fault distance.

Parallel Line Measured Value Correction (optional)

In the case of earth faults on double circuit lines, the measured values obtained for calculation of the impedance are influenced by the mutual coupling of the earth impedance of **both** parallel lines. This causes measuring errors in the result of the impedance computation unless special measures are taken. The device is therefore provided with a parallel line compensation function. This function takes the earth current of the parallel line into consideration when solving the line equation, thereby compensating for the coupling influence as was the case with the derivation of the distance by the distance protection (refer to Section 2.2.1 under „Parallel Line Measured Value Correction“). The earth current of the parallel line must, of course, be connected to the device and the current input I_4 must be configured accordingly during the setting of the **Power System Data 1** (Section 2.1.2.1 under „Current Transformer Connection“).

The parallel line compensation only applies to faults on the protected feeder. For external faults, including those on the parallel line, compensation is impossible.

Correction of Measured Values for Load Current on Double-end Fed Lines

When faults occur on loaded lines fed from both ends (Figure 2-133), the fault voltage $\underline{U}_{F1}$ is influenced not only by the source voltage $\underline{E}_1$, but also by the source voltage $\underline{E}_2$, when both voltages are applied to the common earth resistance R_F. This causes measuring errors in the result of the impedance computation unless special measures are taken, since the current component $\underline{I}_{F2}$ cannot be seen at the measuring point M. For long heavily loaded lines, this can give a significant error in the X–component of the fault impedance (the determining factor for the distance calculation).

A load compensation feature in 7SA522 is provided for the fault location calculation which largely corrects this measurement inaccuracy for single-phase short-circuits. Correction for the R–component of the fault impedance is not possible; but the resultant inaccuracy is not critical, since only the X–component is critical for the distance to fault indication.

Load compensation is effective for single–phase faults. Positive and zero phase sequence components are used in the compensation.

Load compensation can be switched on or off. Switching it off is useful, for example, during relay testing in order to avoid influences caused by the test quantities.

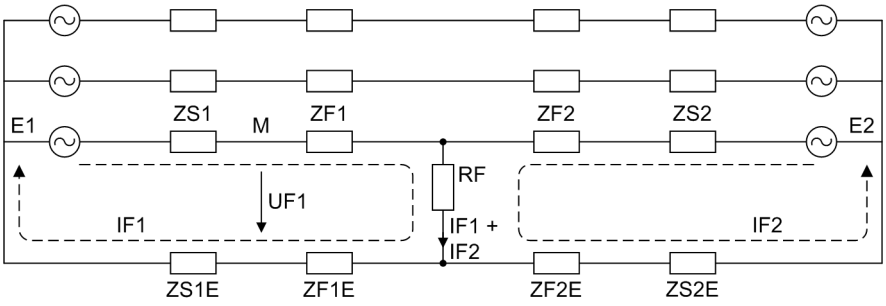

Figure 2-133 Fault currents and voltages on double–end fed lines

M : Measuring point
E1, E2 : Source voltage (EMF)
IF1, IF2 : Partial fault currents
IF1 + IF2 : Total fault current
UF1 : Fault voltage at the measuring point
RF : Common fault resistance
ZF1, ZF2 : Fault impedances
ZF1E, ZF2E : Earth fault impedances
ZS1, ZS2 : Source impedances
ZS1E, ZS2E : Earth source impedances

2.17.2 Setting Notes

General

The fault location function is only in service if it was set to ***Enabled*** during the configuration of the device functions (Section 2.1.1.2, address 138).

If the fault location calculation is to be started by the trip command of the protection, set address 3802 **START** = ***TRIP***. In this case a fault location is only output if the device has also issued a trip. The fault location calculation can however also be started with each fault detection of the device (address 3802 **START** = ***Pickup***). In this case the fault location is also calculated if for example a different protection device cleared the fault. For a fault outside the protected line, the fault location information is not always correct, as the measured values can be distorted by e.g. intermediate infeeds.

To calculate the distance to fault in kilometers or miles, the device requires the reactance per unit length data in Ω/km or Ω/mile. For correct indication of the fault location in % of line length, the correct line length has also to be entered. These setting parameters were already applied with the Power System Data 2 (Section 2.1.4.1 at „General Line Data“).

A prerequisite for the correct indication of the fault location furthermore is that the other parameters that influence the calculation of the distance to fault have also been set correctly. This concerns the following addresses

1116 **RE/RL(Z1)**,

1117 **XE/XL(Z1)**

or

1120 **K0 (Z1)**,

1121 **Angle K0(Z1)**.

If the parallel line compensation is used, set address 3805 **Paral.Line Comp** to ***YES*** (presetting for devices with parallel line compensation). Further prerequisites are that

- the earth current of the parallel line has been connected to the fourth current input I_4 with the correct polarity and
- the current transformer ratio **I4/Iph CT** (address 221) in the Power System Data 1 has been set correctly (refer also to Section 2.1.2.1 under „Current Transformer Connection“) and
- the parameter for the fourth current input **I4 transformer** has been set to ***In paral. line*** (address 220) in the Power System Data 1 (Section 2.1.2.1 under „Current Transformer Connection“) and
- the mutual impedances **RM/RL ParalLine** and **XM/XL ParalLine** (addresses 1126 and 1127) have been set correctly in the general protection data (Power System Data 2, Section 2.1.4.1).

If load compensation is applied to single-phase faults in double-fed lines of an earthed system, set ***YES*** in address 3806 **Load Compensat.**. If high fault resistances are expected for single-phase faults, e.g. at overhead lines without overhead earth wire or unfavourable earthing conditions of the towers, this will improve the accuracy of the distance calculation.

If the fault location is required to be output as BCD-code, set the maximum time period the data should be available at the outputs using address 3811 **Tmax OUTPUT BCD**. If a new fault occurs, the data are terminated immediately even when it occurs before this time has expired. Allocate the corresponding output relays as stored if a longer time period is desired for the output. Once a fault occurred the data will be latched until the memory is reset or a new fault is registered.

2.17.3 Settings

Addr.	Parameter	Setting Options	Default Setting	Comments
3802	START	Pickup TRIP	Pickup	Start fault locator with
3805	Paral.Line Comp	NO YES	YES	Mutual coupling parall.line compensation
3806	Load Compensat.	NO YES	NO	Load Compensation
3811	Tmax OUTPUT BCD	0.10 .. 180.00 sec	0.30 sec	Maximum output time via BCD

2.17.4 Information List

No.	Information	Type of Information	Comments
1114	Rpri =	VI	Flt Locator: primary RESISTANCE
1115	Xpri =	VI	Flt Locator: primary REACTANCE
1117	Rsec =	VI	Flt Locator: secondary RESISTANCE
1118	Xsec =	VI	Flt Locator: secondary REACTANCE
1119	dist =	VI	Flt Locator: Distance to fault
1120	d[%] =	VI	Flt Locator: Distance [%] to fault
1122	dist =	VI	Flt Locator: Distance to fault
1123	FL Loop L1E	OUT_Ev	Fault Locator Loop L1E
1124	FL Loop L2E	OUT_Ev	Fault Locator Loop L2E
1125	FL Loop L3E	OUT_Ev	Fault Locator Loop L3E
1126	FL Loop L1L2	OUT_Ev	Fault Locator Loop L1L2
1127	FL Loop L2L3	OUT_Ev	Fault Locator Loop L2L3
1128	FL Loop L3L1	OUT_Ev	Fault Locator Loop L3L1
1132	Flt.Loc.invalid	OUT	Fault location invalid
1133	Flt.Loc.ErrorK0	OUT	Fault locator setting error K0,angle(K0)
1143	BCD d[1%]	OUT	BCD Fault location [1%]
1144	BCD d[2%]	OUT	BCD Fault location [2%]
1145	BCD d[4%]	OUT	BCD Fault location [4%]
1146	BCD d[8%]	OUT	BCD Fault location [8%]
1147	BCD d[10%]	OUT	BCD Fault location [10%]
1148	BCD d[20%]	OUT	BCD Fault location [20%]
1149	BCD d[40%]	OUT	BCD Fault location [40%]
1150	BCD d[80%]	OUT	BCD Fault location [80%]
1151	BCD d[100%]	OUT	BCD Fault location [100%]
1152	BCD dist. VALID	OUT	BCD Fault location valid

2.18 Circuit breaker failure protection (optional)

The circuit breaker failure protection provides rapid back-up fault clearance in the event that the circuit breaker fails to respond to a trip command from a protection function of the local circuit breaker.

2.18.1 Method of Operation

General

Whenever e.g. a short-circuit protection relay of a feeder issues a trip command to the circuit breaker, this is repeated to the circuit breaker failure protection (Figure 2-134). A timer T–BF in the circuit breaker failure protection is started. The timer runs as long as a trip command is present and current continues to flow through the circuit breaker poles.

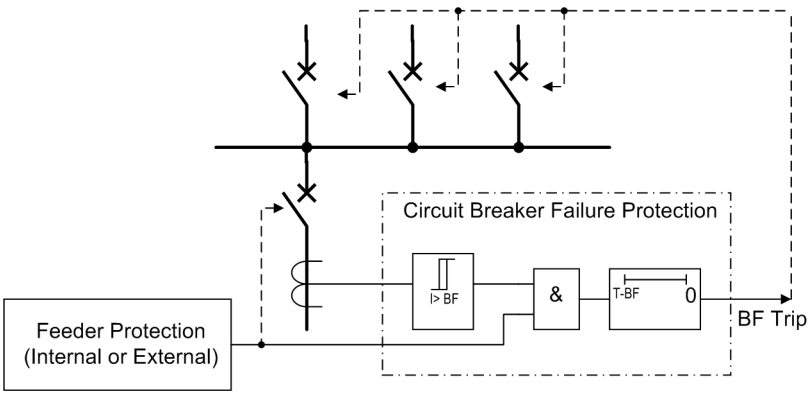

Figure 2-134 Simplified function diagram of circuit breaker failure protection with current flow monitoring

Normally, the circuit breaker will open and interrupt the fault current. The current monitoring stage quickly resets (typical 10 ms) and stops the timer T–BF.

If the trip command is not carried out (circuit breaker failure case), current continues to flow and the timer runs to its set limit. The circuit breaker failure protection then issues a command to trip the backup circuit breakers and interrupt the fault current.

The reset time of the feeder protection is not relevant because the circuit breaker failure protection itself recognizes the interruption of the current.

For protection functions where the tripping criterion is not dependent on current (e.g. Buchholz protection), current flow is not a reliable criterion for proper operation of the circuit breaker. In such cases, the circuit breaker position can be derived from the auxiliary contacts of the circuit breaker. Therefore, instead of monitoring the current, the position of the auxiliary contacts is monitored (see Figure 2-135). For this purpose, the outputs from the auxiliary contacts must be fed to binary inputs on the relay (refer also to Section 2.20.1).

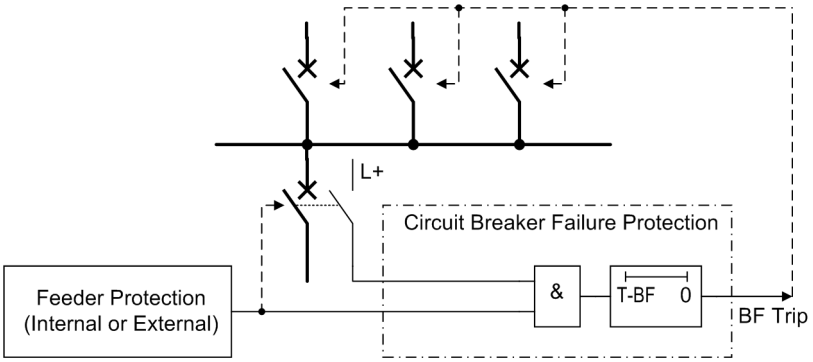

Figure 2-135 Simplified function diagram of circuit breaker failure protection controlled by circuit breaker auxiliary contact

Current flow monitoring

Each of the phase currents and an additional plausibility current (see below) are filtered by numerical filter algorithms so that only the fundamental component is used for further evaluation.

Special features recognize the instant of current interruption. In case of sinusoidal currents the current interruption is detected after approximately 10 ms. With aperiodic DC current components in the fault current and/or in the current transformer secondary circuit after interruption (e.g. current transformers with linearized core), or saturation of the current transformers caused by the DC component in the fault current, it can take one AC cycle before the interruption of the primary current is reliably detected.

The currents are monitored and compared with the set limit value. Besides the three phase currents, two further current thresholds are provided in order to allow a plausibility check. If configured correspondingly, a separate threshold value can be used for this plausibility check (see Figure 2-136).

The earth current I_E ($3 \cdot I_0$) is preferably used as plausibility current. The earth current from the starpoint of the current transformer set will be used if it is connected to the device. If this current is not available, the device will calculate it from the phase currents using this formula:

$$3 \cdot \underline{I}_0 = \underline{I}_{L1} + \underline{I}_{L2} + \underline{I}_{L3}$$

Additionally, the value calculated by 7SA522 of three times the negative sequence current $3 \cdot I_2$ is used for plausibility check. This is calculated according to the equation:

$$3 \cdot \underline{I}_2 = \underline{I}_{L1} + \underline{a}^2 \cdot \underline{I}_{L2} + \underline{a} \cdot \underline{I}_{L3}$$

where

$$\underline{a} = e^{j120°}.$$

These plausibility currents do not have any direct influence on the basic functionality of the circuit breaker failure protection but they allow a plausibility check in that at least two current thresholds must have been exceeded before any of the circuit breaker failure delay times can be started, thus providing high security against false operation.

In case of high-resistance earth faults it may occur that the earth current exceeds the sensitively parameterized threshold value **3I0> BF** (address 3912), the phase current involved in the short-circuit, however, does not exceed the threshold value **I> BF** (address 3902).The plausibility monitoring would prevent the breaker failure protection from being initiated. In this case the pickup threshold of the phase current monitoring**I> BF** can be switched over to the threshold value **3I0> BF**. For this purpose, use the binary input 1404 „>BFactivate3I0>“. This binary input is linked to an external signal which indicates a high resistance fault, e.g. earth fault detection, or detection of displacement voltage. With this method, the more sensitively parameterized earth current threshold is also used for the phase current monitoring (Figure 2-136).

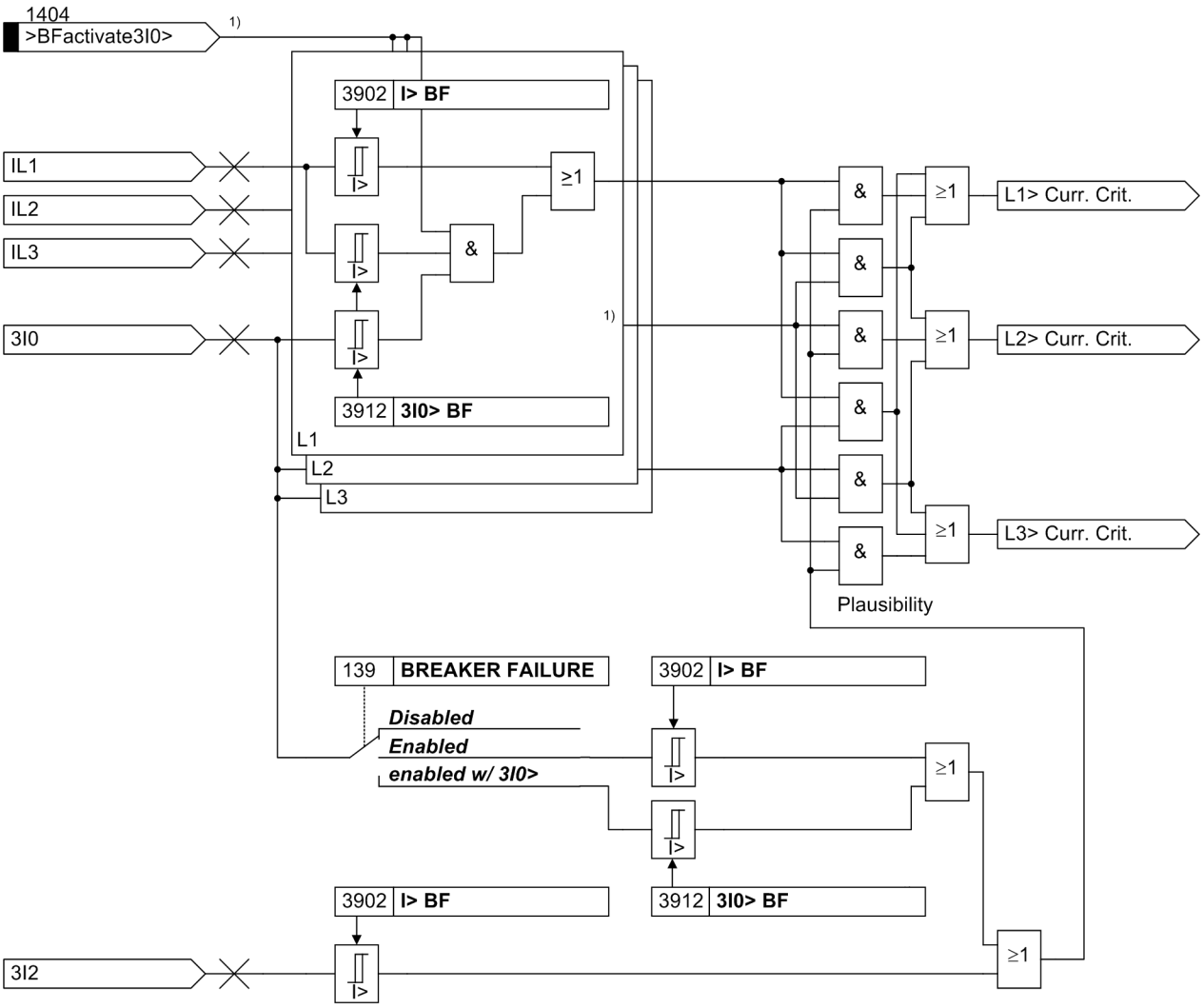

Figure 2-136 Current flow monitoring with plausibility currents $3{\cdot}I_0$ and $3{\cdot}I_2$

1) only available/visible if 139 is set to ***enabled w/ 3I0>***

Monitoring the circuit breaker auxiliary contacts

It is the central function control of the device that informs the circuit breaker failure protection on the position of the circuit breaker (refer also to Section 2.20.1). The evaluation of the circuit breaker auxiliary contacts is carried out in the circuit breaker failure protection function only when the current flow monitoring has not picked up. Once the current flow criterion has picked up during the trip signal from the feeder protection, the circuit breaker is assumed to be open as soon as the current disappears, even if the associated auxiliary contact does not (yet) indicate that the circuit breaker has opened (Figure 2-137). This gives preference to the more reliable current criterion and avoids overfunctioning due to a defect e.g. in the auxiliary contact mechanism or circuit. This interlock feature is provided for each individual phase as well as for 3-pole tripping.

It is possible to disable the auxiliary contact criterion. If you set the parameter switch **Chk BRK CONTACT** (Figure 2-139 top) to ***NO***, the circuit breaker failure protection can only be started when current flow is detected. The position of the auxiliary contacts is then not evaluated even if the auxiliary contacts are connected to the device.

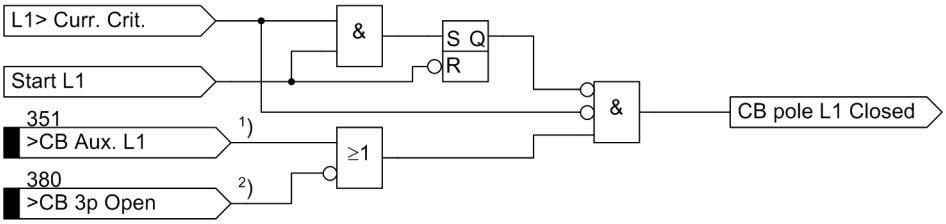

Figure 2-137 Interlock of the auxiliary contact criterion - example for phase L1

[1]) if phase-segregated auxiliary contacts are available

[2]) if series-connected NC contacts are available

On the other hand, current flow is not a reliable criterion for proper operation of the circuit breaker for faults which do not cause detectable current flow (e.g. Buchholz protection). Information regarding the position of the circuit breaker auxiliary contacts is required in these cases to check the correct response of the circuit breaker. For this purpose, the binary input „>BF Start w/o I“ No. 1439 is provided (Figure 2-139 left). This input initiates the circuit breaker failure protection even if no current flow is detected.

Common phase initiation

Common phase initiation is used, for example, in systems with only 3-pole tripping, for transformer feeders, or if the busbar protection trips. It is the only available initiation mode when using the 7SA522 version capable of 3-pole tripping only.

If the circuit breaker failure protection is intended to be initiated by further external protection devices, it is recommended, for security reasons, to connect two binary inputs to the device. Besides the trip command of the external protection to the binary input „>BF Start 3pole“ no. 1415 it is recommended to connect also the general device pickup to binary input „>BF release“ no. 1432. For Buchholz protection it is recommended that both inputs are connected to the device by two separate wire pairs.

Nevertheless, it is possible to initiate the circuit breaker failure protection in single-channel mode should a separate release criterion not be available. The binary input „>BF release“ (No. 1432) must then not be assigned to any physical input of the device during configuration.

Figure 2-139 shows the operating principle. When the trip signal appears from any internal or external feeder protection and at least one current flow criterion according to Figure 2-136 is present, the circuit breaker failure protection is initiated and the corresponding delay time(s) is (are) started.

If the current criterion is not fulfilled for any of the phases, the position of the circuit breaker auxiliary contact can be queried as shown in Figure 2-138. If the circuit breaker poles have individual auxiliary contacts, the series connection of the three normally closed (NC) auxiliary contacts is used. After a 3-pole trip command the circuit breaker has only operated correctly if no current is flowing via any phase or alternatively all three auxiliary contacts indicate the CB is open.

Figure 2-138 illustrates how the internal signal „CB pole ≥L1 closed“ is created (see Figure 2-139 left) if at least one circuit breaker pole is closed.

By means of the binary input 1424 „>BF STARTonlyT2“, the tripping delay 3906 **T2** can be started. After this time stage has elapsed, the circuit breaker failure TRIP command 1494 „BF T2-TRIP(bus)“ is issued.

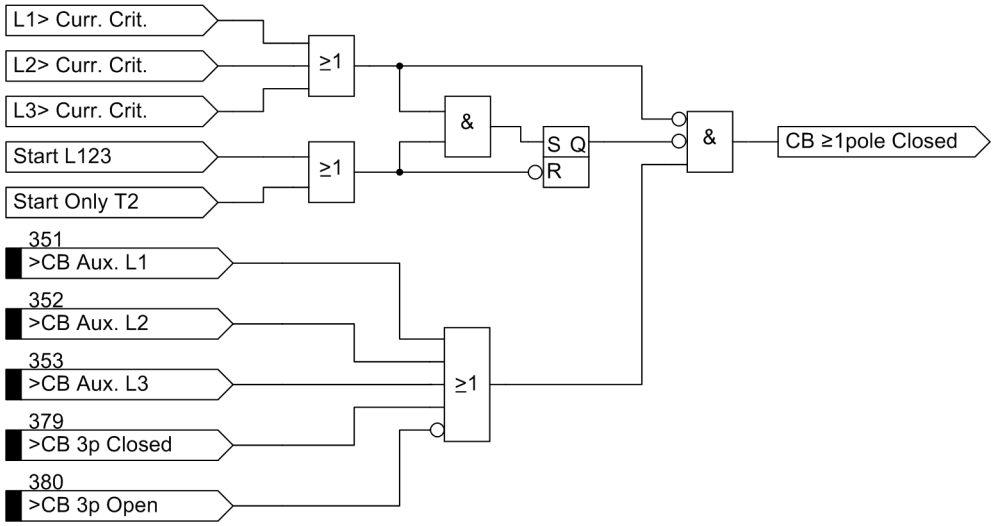

Figure 2-138 Creation of signal "CB ≥ any pole closed"

If an internal protection function or an external protection device trips without current flow, the circuit breaker failure protection is initiated by the internal input „Start internal w/o I“, if the trip signal comes from the internal voltage protection or frequency protection, or by the external input „>BF Start w/o I“. In this case the start signal is maintained until the circuit breaker is reported to be open by the auxiliary contact criterion.

Initiation can be blocked via the binary input „>BLOCK BkrFail“ (e.g. during test of the feeder protection relay).

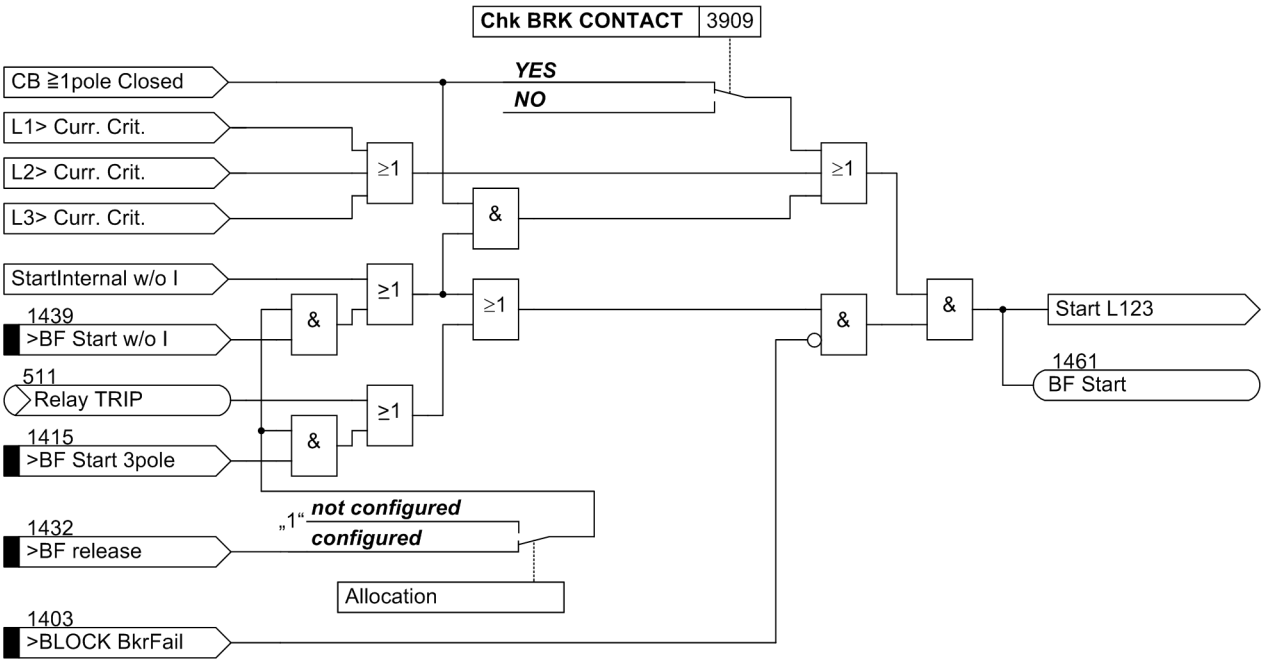

Figure 2-139 Breaker failure protection with common phase initiation

Phase-segregated initiation

Phase segregated initiation of the circuit breaker failure protection is necessary if the circuit breaker poles are operated individually, e.g. if 1-pole automatic reclosure is used. This is possible if the device is able to trip 1-pole.

If the circuit breaker failure protection is intended to be initiated by further external protection devices, it is recommended, for security reasons, to connect two binary inputs to the device. Besides the three trip commands of the external relay to the binary input „>BF Start L1“, „>BF Start L2“ and „>BF Start L3“ it is recommended to connect also, for example, the general device pickup to binary input „>BF release“. Figure 2-140 shows this connection.

Nevertheless, it is possible to initiate the circuit breaker failure protection in single-channel mode should a separate release criterion not be available. The binary input „>BF release“ must then not be assigned to any physical input of the device during configuration.

If the external protection device does not provide a general fault detection signal, a general trip signal can be used instead. Alternatively, the parallel connection of a separate set of trip contacts can produce such a release signal as shown in Figure 2-141.

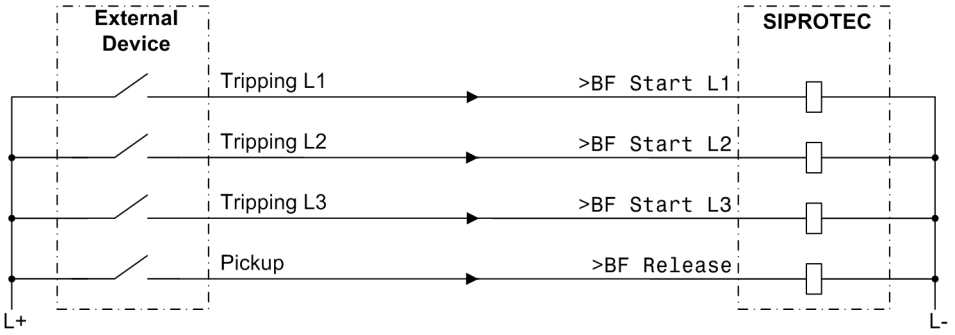

Figure 2-140 Breaker failure protection with phase segregated initiation — example for initiation by an external protection device with release by a fault detection signal

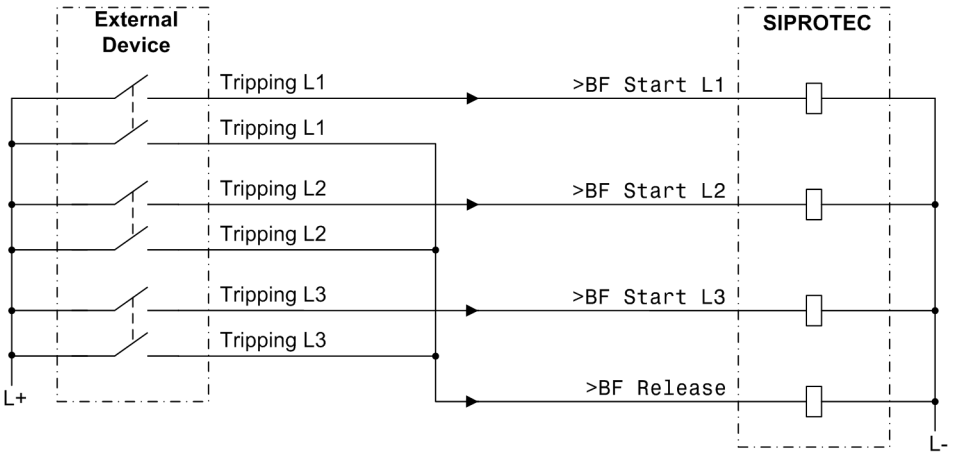

Figure 2-141 Breaker failure protection with phase segregated initiation — example for initiation by an external protection device with release by a separate set of trip contacts

In principle, the starting condition logic for the delay time(s) is designed similar to that for the common phase initiation, however, individually for each of the three phases (as shown in Figure 2-142). Thus, current and initiation conditions are processed for each CB pole. Also during a 1-pole automatic reclosure, the current interruption is reliably monitored for the tripped CB pole only.

Initiation of an individual phase, e.g. „Start L1“, is only valid if the starting signal (= tripping signal of the feeder protection) appears for this phase and if the current criterion is met for at least this phase. If it is not met, the circuit breaker auxiliary contact can be interrogated according to Figure 2-137 – if parameterised (**`Chk BRK CONTACT`** = ***YES***).

The auxiliary contact criterion is also processed for each individual circuit breaker pole. If, however, the circuit breaker auxiliary contacts are not available for each individual circuit breaker pole, then a 1-pole trip command is assumed to be executed only if the series connection of the normally open (NO) auxiliary contacts is interrupted. This information is provided to the circuit breaker failure protection by the central function control of the device (refer to Section 2.20.1).

The 3-phase starting signal „Start L123“ is generated if there are start signals for more than one phase. The input "BF Start w/o I" (e.g. from Buchholz protection) operates only in 3-phase mode. The function is the same as with common phase initiation.

The additional release-signal „`>BF release`“ (if assigned to a binary input) affects all external initiation conditions. Initiation can be blocked via the binary input „`>BLOCK BkrFail`“ (e.g. during test of the feeder protection relay).

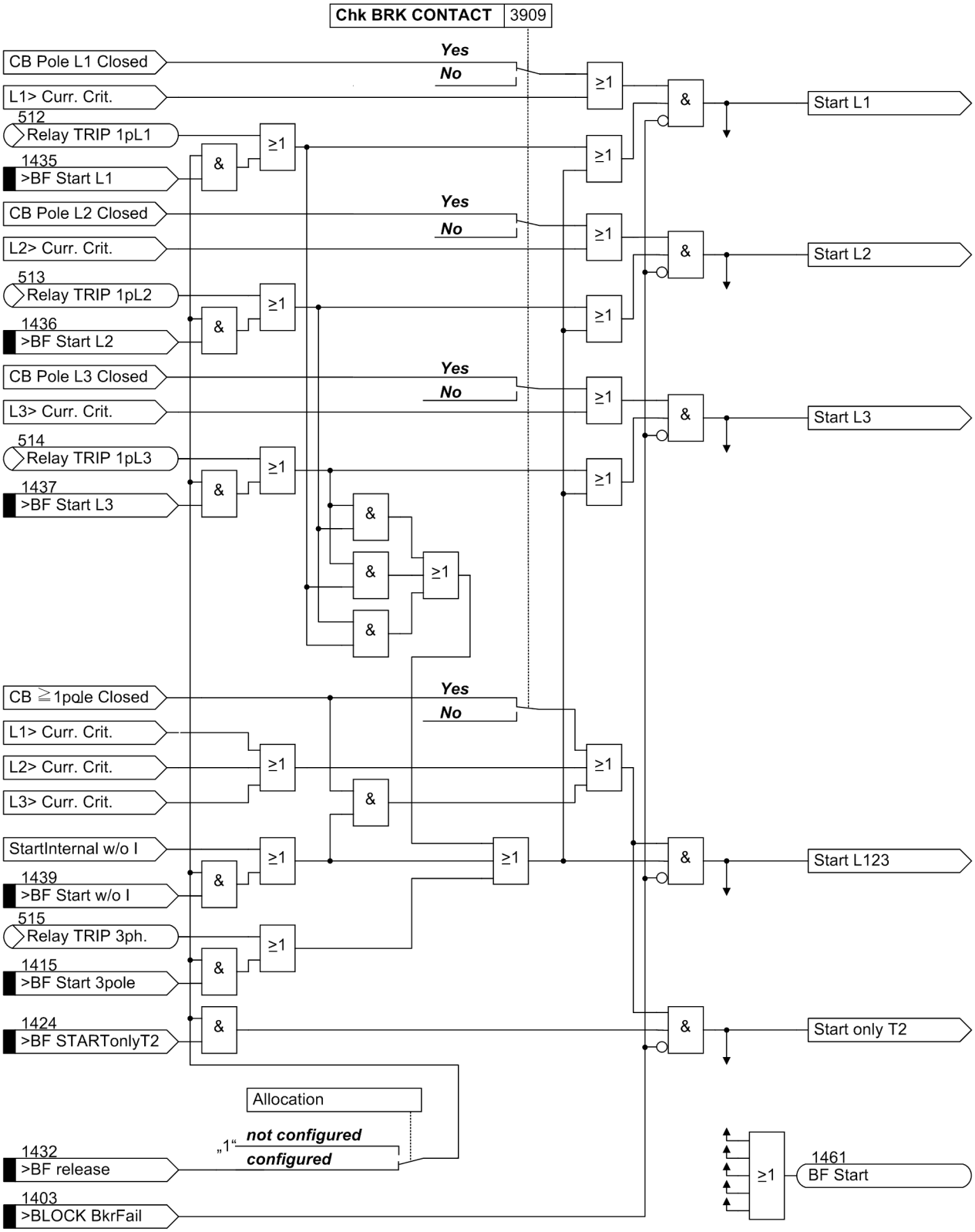

Figure 2-142 Initiation conditions for single-pole trip commands

Delay times

When the initiatiation conditions are fulfilled, the associated timers are started. The circuit breaker pole(s) must open before the associated time has elapsed.

Different delay times are possible for 1-pole and 3-pole initiation. An additional delay time can be used for two-stage circuit breaker failure protection.

With single-stage circuit breaker failure protection, the trip command is relayed to the adjacent circuit breakers which interrupt the fault current if the local feeder breaker fails (see Figure 2-134 and Figure 2-135). The adjacent circuit breakers are those located at the busbar or busbar section to which the feeder under consideration is connected. The possible initiation conditions for the circuit breaker failure protection are those discussed above. Depending on the application of the feeder protection, common phase or phase-segregated initiation conditions may occur. The circuit breaker failure protection always trips 3-pole.

The simplest solution is to start the delay timer **T2** (Figure 2-143). The phase-segregated initiation signals are omitted if the feeder protection always trips 3-pole or if the circuit breaker is not capable of 1-pole tripping.

If different delay times are required after a 1-pole trip or 3-pole trip it is possible to use the timer stages **T1-1pole** and **T1-3pole** according to Figure 2-144.

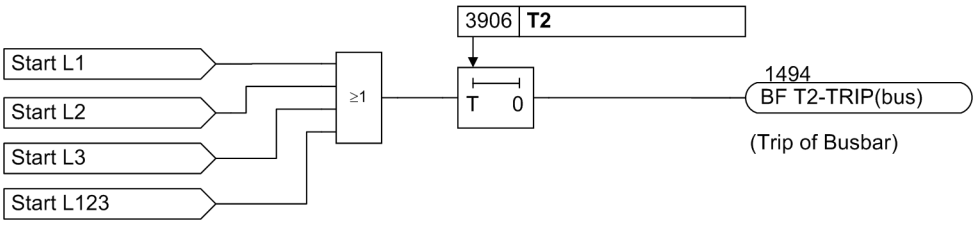

Figure 2-143 Single-stage breaker failure protection with common phase initiation

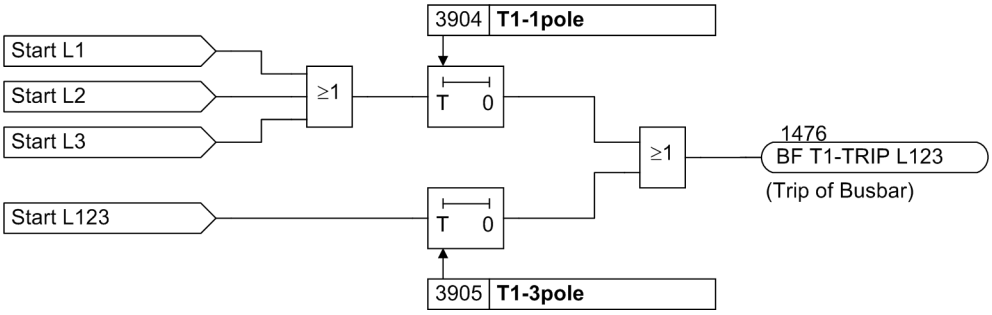

Figure 2-144 Single-stage breaker failure protection with different delay times

With two-stage circuit breaker failure protection the trip command of the feeder protection is usually repeated, after a first time stage, to the feeder circuit breaker, often via a second trip coil or set of trip coils, if the circuit breaker has not responded to the original trip command. A second time stage monitors the response to this repeated trip command and trips the circuit breakers of the relevant busbar section if the fault has not yet been cleared after this second time.

For the first stage, a different delay **T1-1pole** can be set for 1-pole trip than for 3-pole trip by the feeder protection. Additionally, you can select (by setting parameter **1p-RETRIP (T1)**) whether this repeated trip should be 1-pole or 3-pole. In case of a multi-pole tripping of the feeder protection, **T1-1pole** and **T1-3pole** are started simultaneously. By means of **T1-3pole**, the tripping of the circuit breaker failure protection can be accelerated in comparison to **T1-1pole**.

Address 3913 **T2StartCriteria** is used to set whether the delay time **T2** will be started after expiry of T1 (**T2StartCriteria** = ***With exp. of T1***) or simultaneously with it (**T2StartCriteria** = ***Parallel withT1***). The time **T2** can also be initiated via a separate binary input 1424 „>BF STARTonlyT2“.

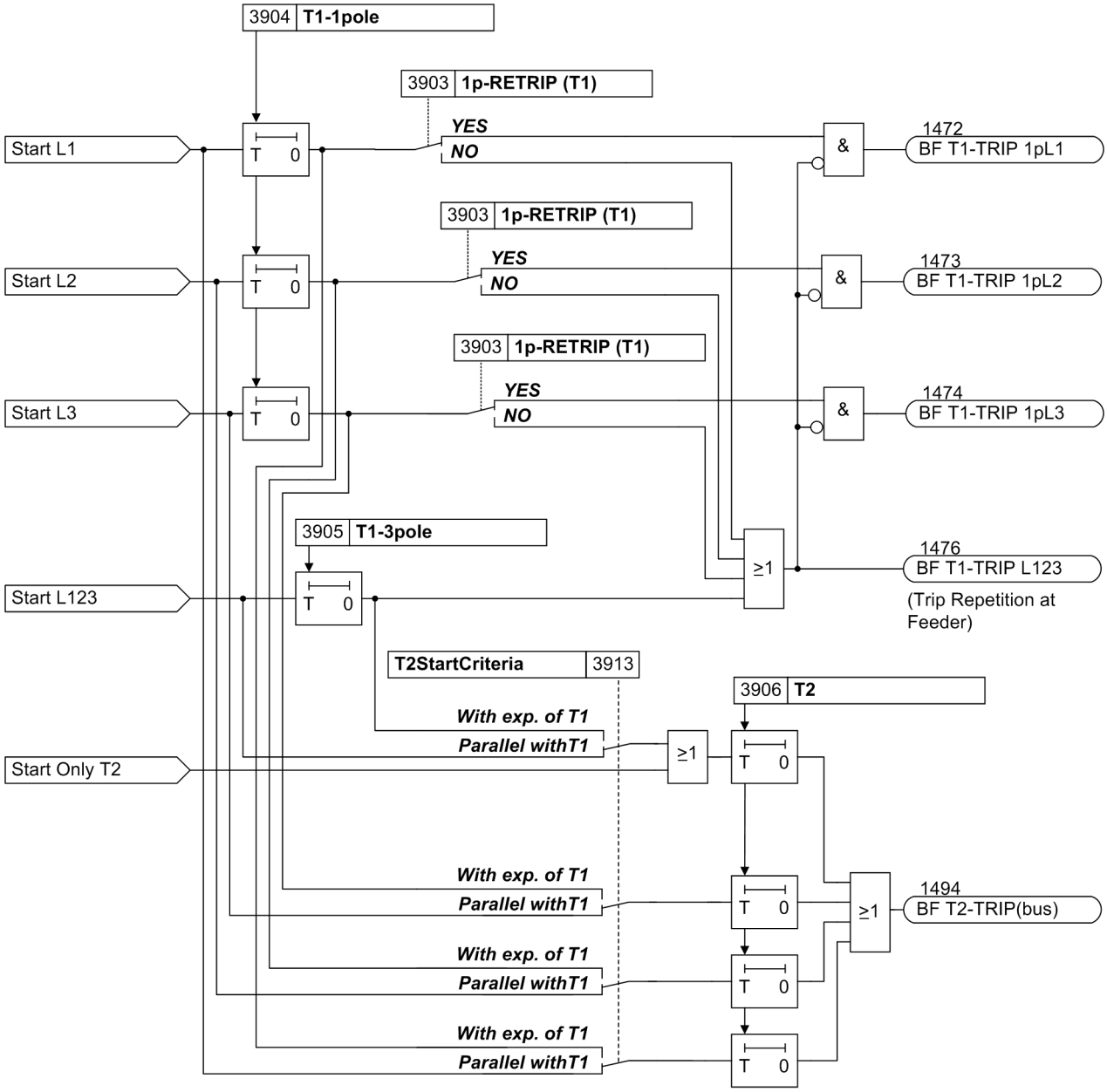

Figure 2-145 Logic diagram of the two-stage breaker failure protection

Circuit breaker not operational

There may be cases when it is already obvious that the circuit breaker associated with a feeder protection relay cannot clear a fault, e.g. when the tripping voltage or the tripping energy is not available.

In such a case it is not necessary to wait for the response of the feeder circuit breaker. If provision has been made for the detection of such a condition (e.g. control voltage monitor or air pressure monitor), the monitor alarm signal can be fed to the binary input „>CB faulty“ of the 7SA522. On occurrence of this alarm and a trip command by the feeder protection, a separate timer **T3-BkrDefective**, which is normally set to 0, is

started (Figure 2-146). Thus, the adjacent circuit breakers (bus-bar) are tripped immediately in case the feeder circuit breaker is not operational.

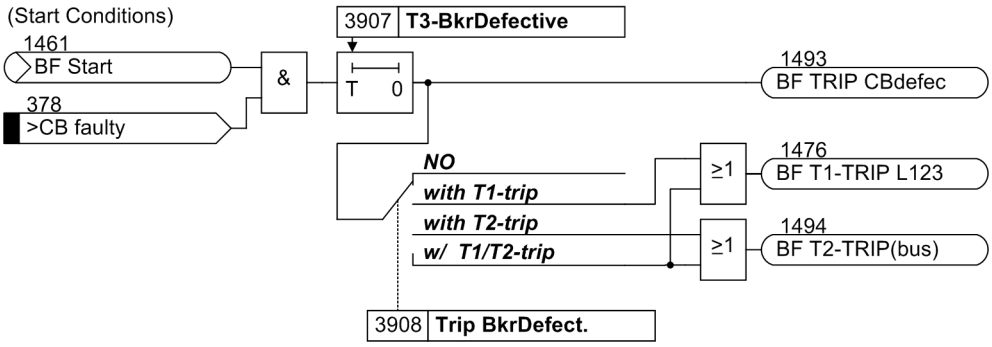

Figure 2-146 Circuit breaker faulty

Transfer trip to the remote end circuit breaker

The device has the facility to provide an additional intertrip signal to the circuit breaker at the remote line end in the event that the local feeder circuit breaker fails. For this, a suitable protection signal transmission link is required (e.g. via communication cable, power line carrier transmission, radio transmission, or optical fibre transmission). With devices using digital transmission via protection interface, the remote commands can be applied (see also Section 2.5).

To realise this intertrip, the desired command — usually the trip command which is intended to trip the adjacent circuit breakers — is assigned to a binary output of the device. The contact of this output triggers the transmission device. When using digital signal transmission, the command is connected to a remote command via the user-defined logic (CFC).

End fault protection

An end fault is defined here as a short–circuit which has occurred at the end of a line or protected object, between the circuit breaker and the current transformer set.

Figure 2-147 shows the situation. The fault is located — as seen from the current transformer (= measurement location) — on the busbar side, it will thus not be regarded as a feeder fault by the feeder protection relay. It can only be detected by either a reverse stage of the feeder protection or by the busbar protection. However, a trip command given to the feeder circuit breaker does not clear the fault since the opposite end continues to feed the fault. Thus, the fault current does not stop flowing even though the feeder circuit breaker has properly responded to the trip command.

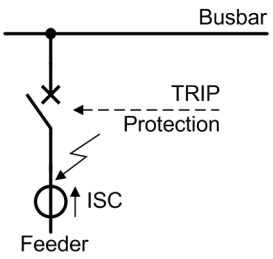

Figure 2-147 End fault between circuit breaker and current transformers

The end fault protection has the task to recognize this situation and to transmit a trip signal to the remote end(s) of the protected object to clear the fault. For this purpose, the output command „BF EndFlt TRIP“ is available to trigger a signal transmission device (e.g. power line carrier, radio wave, or optical fibre) — if applicable, together with other commands that need to be transferred or (when using digital signal transmission) as command via the protection data interface.

The end fault is recognized when the current continues flowing although the circuit breaker auxiliary contacts indicate that the circuit breaker is open. An additional criterion is the presence of any circuit breaker failure protection initiate signal. Figure 2-148 illustrates the functional principle. If the circuit breaker failure protection is initiated and current flow is detected (current criteria „L*> current criterion“ according to Figure 2-136), but no circuit breaker pole is closed (auxiliary contact criterion „ any pole closed“), then the timer **T-EndFault** is started. At the end of this time an intertrip signal is transmitted to the opposite end(s) of the protected object.

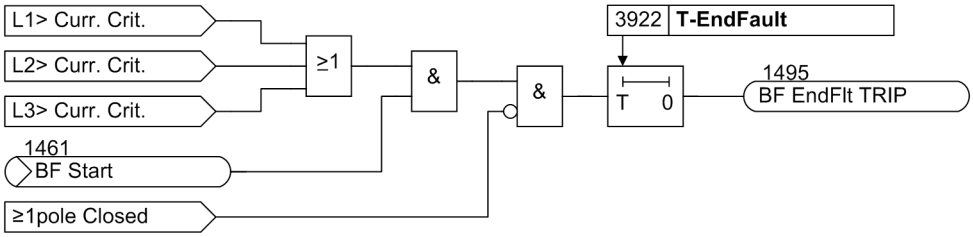

Figure 2-148 Functional scheme of the end fault protection

Pole discrepancy supervision

The pole discrepancy supervision has the task to detect discrepancies in the position of the three circuit breaker poles. Under steady-state operating conditions, either all three poles of the circuit breaker must be closed, or all three poles must be open. Discrepancy is permitted only for a short time interval during a 1-pole automatic reclose cycle.

The scheme functionality is shown in Figure 2-149. The signals which are processed here are the same as those used for the circuit breaker failure protection. The pole discrepancy condition is established when at least one pole is closed („ ≥ one pole closed“) and at the same time not all three poles are closed („ ≥ one pole open“).

Additionally, the current criteria (from Figure 2-136) are processed. Pole discrepancy can only be detected when current is not flowing through all three poles, i.e. through only one or two poles. When current is flowing through all three poles, all three poles must be closed even if the circuit breaker auxiliary contacts indicate a different status.

If pole discrepancy is detected, this is indicated by a fault detection signal. This signal identifies the pole which was open before the trip command of the pole discrepancy supervision occurred.

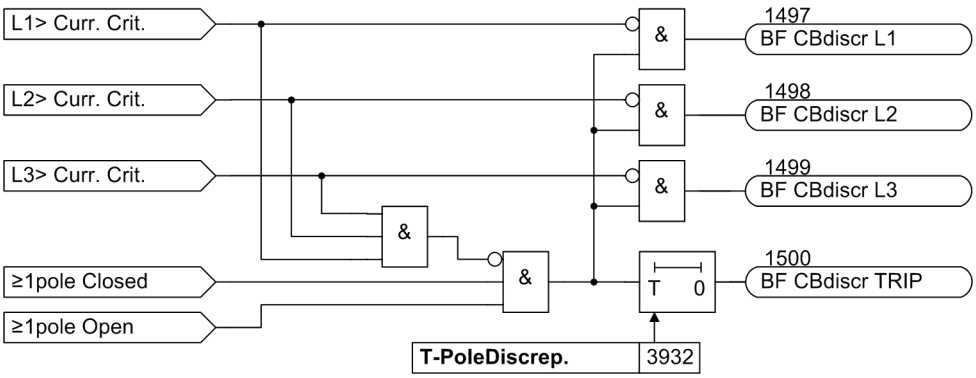

Figure 2-149 Function diagram of pole discrepancy supervision

2.18.2 Setting Notes

General

The circuit breaker failure protection and its ancillary functions (end fault protection, pole discrepancy supervision) can only operate if they were set during configuration of the scope of functions (address 139 **BREAKER FAILURE**, setting ***Enabled*** or ***enabled w/ 3IO>***).

Circuit breaker failure protection

The circuit breaker failure protection is switched ***ON*** or ***OFF*** at address 3901 **FCT BreakerFail**.

The current threshold **I> BF** (address 3902) should be selected such that the protection will operate with the smallest expected short-circuit current. A setting of 10 % below the minimum fault current for which circuit breaker failure protection must operate is recommended. On the other hand, the value should not be set lower than necessary.

If the circuit breaker failure protection is configured with zero sequence current threshold (address 139 = ***enabled w/ 3IO>***), the pickup threshold for the zero sequence current **3IO> BF** (address 3912) can be set independently of **I> BF**.

Normally, the circuit breaker failure protection evaluates the current flow criterion as well as the position of the circuit breaker auxiliary contact(s). If the auxiliary contact(s) status is not available in the device, this criterion cannot be processed. In this case, set address 3909 **Chk BRK CONTACT** to ***NO***.

Two-stage circuit breaker failure protection

With two-stage operation, the trip command is repeated after a time delay T1 to the local feeder circuit breaker, normally to a different set of trip coils of this circuit breaker. A choice can be made whether this trip repetition shall be 1-pole or 3-pole if the initial feeder protection trip was 1-pole (provided that 1-pole trip is possible). This choice is made in address 3903 **1p-RETRIP (T1)**. Set this parameter to ***YES*** if the first stage is to trip 1-pole, otherwise set it to ***NO***.

If the circuit breaker does not respond to this trip repetition, the adjacent circuit breakers are tripped after T2, i.e. the circuit breakers of the busbar or of the concerned busbar section and, if necessary, also the circuit breaker at the remote end unless the fault has been cleared.

Separate delay times can be set

- for 1- or 3-pole trip repetition to the local feeder circuit breaker after a **1**-pole trip of the feeder protection **T1-1pole** at address 3904,
- for 3-pole trip repetition to the local feeder circuit breaker after **3**-pole trip of the feeder protection **T1-3pole** (address 3905),
- for trip of the adjacent circuit breakers (busbar zone and remote end if applicable) **T2** at address 3906.

Note

In case of a multi-pole tripping of the feeder protection, **T1-1pole** and **T1-3pole** are started simultaneously. By means of **T1-3pole**, the tripping of the circuit breaker failure protection can be accelerated in comparison to **T1-1pole**. For this reason, set **T1-1pole** to equal or longer than **T1-3pole**.

The delay times are set dependant on the maximum operating time of the feeder circuit breaker and the reset time of the current detectors of the circuit breaker failure protection, plus a safety margin which allows for any tolerance of the delay timers. Figure 2-150 illustrates the timing of a typical circuit breaker failure scenario. The dropout time for sinusoidal currents is ≤ 15 ms. If current transformer saturation is anticipated, the time should be set to 25 ms.

Note

If the circuit breaker failure protection shall perform a 1-pole TRIP repetition, the time set at the AR, address 3408 **T-Start MONITOR**, must be longer than the time parameterized for address 3903 **1p-RETRIP (T1)** to prevent a 3-pole coupling by the AR before expiry of **T1**.

In order to prevent an AR after „BF T2-TRIP(bus)“, the time 3408 **T-Start MONITOR** can be set in such a way that it expires simultaneously with **T2** .

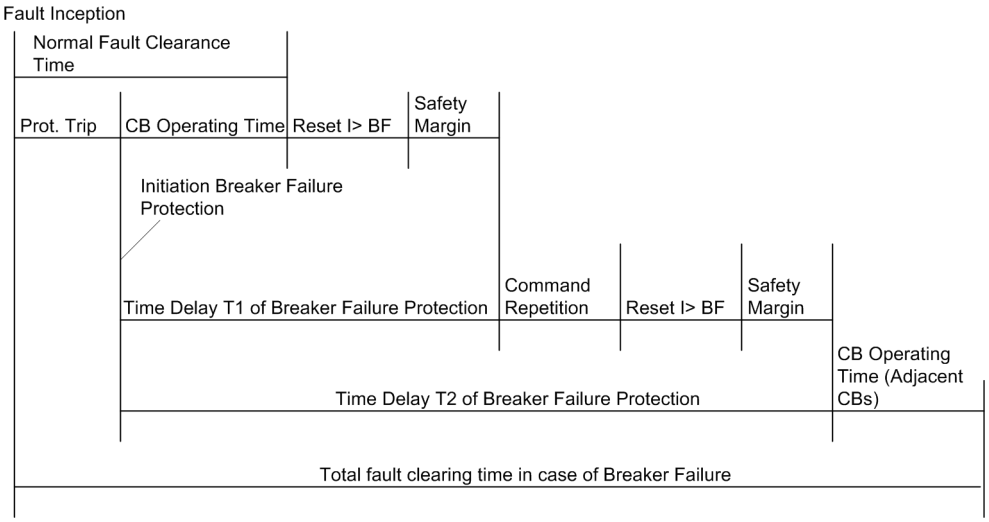

Figure 2-150 Time sequence example for normal clearance of a fault, and with circuit breaker failure, using two-stage breaker failure protection

Single-stage circuit breaker failure protection

With single-stage operation, the adjacent circuit breakers (i.e. the circuit breakers of the busbar zone and, if applicable, the circuit breaker at the remote end) are tripped after a delay time **T2** (address 3906) should the fault not have been cleared within this time.

The timers **T1-1pole** (address 3904) and **T1-3pole** (address 3905) are then set to ∞ since they are not needed.

You can also use the first stage alone if you wish to use different delay times after 1-pole and 3-pole tripping of the feeder protection. In this case set **T1-1pole** (address 3904) and **T1-3pole** (address 3905) separately, but address 3903 **1p-RETRIP (T1)** to ***NO*** to avoid a 1-pole trip command to the busbar. Set **T2** (address 3906) to ∞ or equal to **T1-3pole** (address 3905). Be sure that the correct trip commands are assigned to the desired trip relay(s).

The delay time is determined from the maximum operating time of the feeder circuit breaker, the reset time of the current detectors of the circuit breaker failure protection, plus a safety margin which allows for any tolerance of the delay timers. The time sequence is illustrated in Figure 2-151. The dropout time for sinusoidal currents is ≤ 15 ms. If current transformer saturation is anticipated, the time should be set to 25 ms.

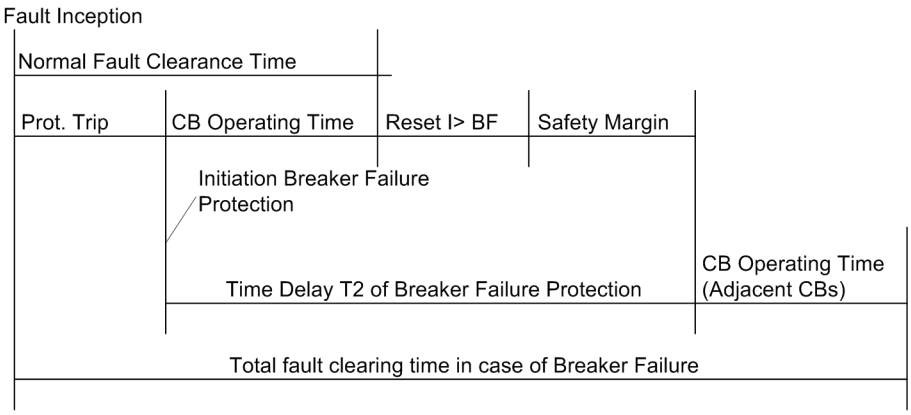

Figure 2-151 Time sequence example for normal clearance of a fault, and with circuit breaker failure, using single-stage breaker failure protection

Circuit breaker not operational

These delays are not necessary if the control circuit of the local circuit breaker is faulted (e.g. control voltage failure or air pressure failure) since it is apparent that the circuit breaker is not capable of clearning the fault. If the relay is informed about this disturbance (via the binary input „>CB faulty“), the adjacent circuit breakers (busbar and remote end if applicable) are tripped after the time **T3-BkrDefective** (address 3907) which is usually set to **0**.

Address 3908 **Trip BkrDefect.** determines to which output the trip command is routed in the event that the circuit breaker is not operational when a feeder protection trip occurs. Select that output which is used to trip the adjacent circuit breakers (bus-bar trip).

End fault protection

The end fault protection can be switched separately ***ON*** or ***OFF*** in address 3921 **End Flt. stage**. An end fault is a short-circuit between the circuit breaker and the current transformer set of the feeder. The end fault protection presumes that the device is informed about the circuit breaker position via circuit breaker auxiliary contacts connected to binary inputs.

If, during an end fault, the circuit breaker is tripped by a reverse stage of the feeder protection or by the busbar protection (the fault is a busbar fault as determined from the location of the current transformers), the fault current will continue to flow, because the fault is fed from the remote end of the feeder circuit.

The time **T-EndFault** (address 3922) is started when, during the time of pickup condition of the feeder protection, the circuit breaker auxiliary contacts indicate open poles and, at the same time, current flow is still detected (address 3902). The trip command of the end fault protection is intended for the transmission of an intertrip signal to the remote end circuit breaker.

Thus, the delay time must be set so that it can bridge out short transient apparent end fault conditions which may occur during switching of the circuit breaker.

Pole discrepancy supervision

In address 3931 **PoleDiscrepancy** (pole discrepancy protection), the pole discrepancy supervision can be switched separately ***ON*** or ***OFF***. It is only useful if the circuit breaker poles can be operated individually. It avoids that only one or two poles of the local circuit breaker are open continuously. It has to be provided that either the auxiliary contacts of each pole or the series connection of the NO auxiliary contacts and the series connection of the NC auxiliary contacts are connected to the device's binary inputs. If these conditions are not fulfilled, switch address 3931 ***OFF***.

The delay time **T-PoleDiscrep.** (address 3932) indicates how long a circuit breaker pole discrepancy condition of the feeder circuit breaker, i.e. only one or two poles open, may be present before the pole discrepancy supervision issues a 3-pole trip command. This time must be clearly longer than the duration of a 1-pole automatic reclose cycle. The time should be less than the permissible duration of an unbalanced load condition which is caused by the unsymmetrical position of the circuit breaker poles. Conventional values are 2 s to 5 s.

2.18.3 Settings

The table indicates region-specific presettings. Column C (configuration) indicates the corresponding secondary nominal current of the current transformer.

Addr.	Parameter	C	Setting Options	Default Setting	Comments
3901	FCT BreakerFail		ON OFF	ON	Breaker Failure Protection
3902	I> BF	1A	0.05 .. 20.00 A	0.10 A	Pick-up threshold I>
		5A	0.25 .. 100.00 A	0.50 A	
3903	1p-RETRIP (T1)		NO YES	YES	1pole retrip with stage T1 (local trip)
3904	T1-1pole		0.00 .. 30.00 sec; ∞	0.00 sec	T1, Delay after 1pole start (local trip)
3905	T1-3pole		0.00 .. 30.00 sec; ∞	0.00 sec	T1, Delay after 3pole start (local trip)
3906	T2		0.00 .. 30.00 sec; ∞	0.15 sec	T2, Delay of 2nd stage (busbar trip)
3907	T3-BkrDefective		0.00 .. 30.00 sec; ∞	0.00 sec	T3, Delay for start with defective bkr.
3908	Trip BkrDefect.		NO with T1-trip with T2-trip w/ T1/T2-trip	NO	Trip output selection with defective bkr
3909	Chk BRK CONTACT		NO YES	YES	Check Breaker contacts
3912	3I0> BF	1A	0.05 .. 20.00 A	0.10 A	Pick-up threshold 3I0>
		5A	0.25 .. 100.00 A	0.50 A	
3913	T2StartCriteria		With exp. of T1 Parallel withT1	Parallel withT1	T2 Start Criteria
3921	End Flt. stage		ON OFF	OFF	End fault protection
3922	T-EndFault		0.00 .. 30.00 sec; ∞	2.00 sec	Trip delay of end fault protection
3931	PoleDiscrepancy		ON OFF	OFF	Pole Discrepancy supervision
3932	T-PoleDiscrep.		0.00 .. 30.00 sec; ∞	2.00 sec	Trip delay with pole discrepancy

2.18.4 Information List

No.	Information	Type of Information	Comments
1401	>BF on	SP	>BF: Switch on breaker fail protection
1402	>BF off	SP	>BF: Switch off breaker fail protection
1403	>BLOCK BkrFail	SP	>BLOCK Breaker failure
1404	>BFactivate3I0>	SP	>BF Activate 3I0> threshold
1415	>BF Start 3pole	SP	>BF: External start 3pole
1424	>BF STARTonlyT2	SP	>BF: Start only delay time T2
1432	>BF release	SP	>BF: External release
1435	>BF Start L1	SP	>BF: External start L1
1436	>BF Start L2	SP	>BF: External start L2
1437	>BF Start L3	SP	>BF: External start L3
1439	>BF Start w/o I	SP	>BF: External start 3pole (w/o current)
1440	BkrFailON/offBI	IntSP	Breaker failure prot. ON/OFF via BI
1451	BkrFail OFF	OUT	Breaker failure is switched OFF
1452	BkrFail BLOCK	OUT	Breaker failure is BLOCKED
1453	BkrFail ACTIVE	OUT	Breaker failure is ACTIVE
1461	BF Start	OUT	Breaker failure protection started
1472	BF T1-TRIP 1pL1	OUT	BF Trip T1 (local trip) - only phase L1
1473	BF T1-TRIP 1pL2	OUT	BF Trip T1 (local trip) - only phase L2
1474	BF T1-TRIP 1pL3	OUT	BF Trip T1 (local trip) - only phase L3
1476	BF T1-TRIP L123	OUT	BF Trip T1 (local trip) - 3pole
1493	BF TRIP CBdefec	OUT	BF Trip in case of defective CB
1494	BF T2-TRIP(bus)	OUT	BF Trip T2 (busbar trip)
1495	BF EndFlt TRIP	OUT	BF Trip End fault stage
1496	BF CBdiscrSTART	OUT	BF Pole discrepancy pickup
1497	BF CBdiscr L1	OUT	BF Pole discrepancy pickup L1
1498	BF CBdiscr L2	OUT	BF Pole discrepancy pickup L2
1499	BF CBdiscr L3	OUT	BF Pole discrepancy pickup L3
1500	BF CBdiscr TRIP	OUT	BF Pole discrepancy Trip

2.19 Monitoring Function

The device is equipped with extensive monitoring capabilities - concerning both, hardware and software. In addition, the measured values are also constantly checked for plausibility, so that the current and voltage transformer circuits are largely integrated into the monitoring. It is also possible to implement trip circuit supervision. This supervision is possible using appropriate available binary inputs.

2.19.1 Measurement Supervision

2.19.1.1 Hardware Monitoring

The device is monitored from the measuring inputs up to the command relays. Monitoring circuits and the processor check the hardware for malfunctions and inadmissible conditions.

Auxiliary and Reference Voltages

The processor voltage is monitored by the hardware as the processor cannot operate if the voltage drops below the minimum value. In that case, the device is not operational. On recovery of the voltage the processor system is restarted.

If the supply voltage is removed or switched off, the device is taken out of service, and an indication is immediately generated by a normally closed contact. Brief voltage interruptions of up to 50 ms do not disturb the operational readiness of the device (see for the Technical Data).

The processor monitors the reference voltage of the ADC (analog-to-digital converter). The protection is suspended if the voltages deviate outside an allowable range, and persistent deviations are reported.

Back-up Battery

The buffer battery, which ensures the operation of the internal clock and the storage of counters and indications if the auxiliary voltage fails, is periodically checked for charge status. On its undershooting a minimum admissible voltage, the indication „`Fail Battery`“ (no. 177) is issued.

If the device is not supplied with auxiliary voltage for more than 1 or 2 days, the internal clock is switched off automatically, i.e. the time is not registered any more. The data in the event and fault buffers, however, remain stored.

Memory Components

The main memory (RAM) is tested when the system starts up. If a fault is detected during this process, the startup is aborted. Error LED and LED 1 light up and the remaining LEDs start flashing simultaneously. During operation the memory is checked by means of its checksum.

A checksum of the program memory (EPROM) is cyclically generated and compared with the stored program checksum.

A checksum for the parameter memory (FLASH-EPROM) is cyclically generated and compared with the checksum which is computed after each change of the stored parameters.

If a malfunction occurs, the processor system is restarted.

Offset of the Analogue-to-Digital Converter

The offset of the ADC is measured cyclically for each channel and corrected. When the offset reaches an inadmissibly high value, the indication „`Error Offset`“ (No. 191) is displayed. The protection functions remain active.

Sampling Frequency

The sampling frequency and the synchronism of the analog-digital converters is continuously monitored. If any deviations cannot be removed by remedied synchronization, then the processor system is restarted.

Measured Value Acquisition Currents

Up to four input currents are measured by the device. If the three phase currents and the earth current from the current transformer starpoint or a separated earth current transformer of the line to be protected are connected to the device, their digitized sum must be zero. Faults in the current circuit are recognised if

$$I_F = |\underline{I}_{L1} + \underline{I}_{L2} + \underline{I}_{L3} + k_I \cdot \underline{I}_E| > \Sigma \mathbf{I\ THRESHOLD} + \Sigma \mathbf{I\ FACTOR} \cdot \Sigma\, |\, I\, |$$

Factor k_I (address 221 **`I4/Iph CT`**) takes into account a possible different ratio of a separate I_E transformer (e.g. cable core balance current transformer). **ΣI THRESHOLD** and **ΣI FACTOR**. are setting parameters.

The component **ΣI FACTOR** $\Sigma\, |\, I\, |$ takes into account permissible current proportional ratio errors of the input transformers which are particularly prevalent during large fault currents (Figure 2-152). $\Sigma\, |\, I\, |$ is the sum of all currents:

$$\Sigma\, |\, I\, | = |\underline{I}_{L1}| + |\underline{I}_{L2}| + |\underline{I}_{L3}| + |k_I \cdot \underline{I}_E|$$

This malfunction is signalled as „`Failure Σ I`“ (No. 162).

Note

Current sum monitoring can operate properly only when the ground current of the protected line is fed to the fourth current measuring input (I_4) of the relay.

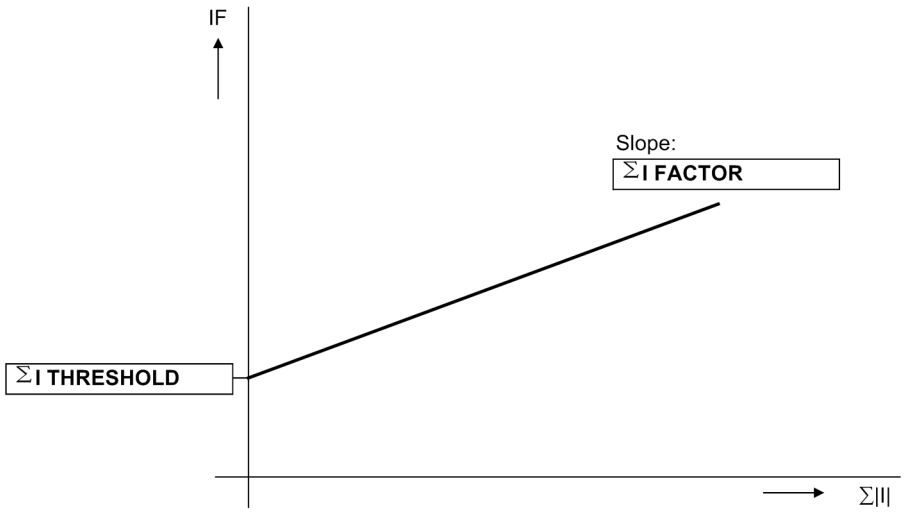

Figure 2-152 Current sum monitoring

Measured Value Acquisition Voltages

Four measuring inputs are available in the voltage path: three for phase-to-earth voltages and one input for the displacement voltage (e-n voltage of open delta winding) or a busbar voltage. If the displacement voltage is connected to the device, the sum of the three digitized phase voltages must equal three times the zero sequence voltage. Errors in the voltage transformer circuits are detected when

$U_F = |\underline{U}_{L1} + \underline{U}_{L2} + \underline{U}_{L3} + k_U \cdot \underline{U}_{EN}| > 25$ V.

The factor k_U allows for a difference of the transformation ratio between the displacement voltage input and the phase voltage inputs (address 211 **Uph / Udelta**).

This malfunction is signalled as „Fail Σ U Ph-E“ (no. 165).

Note

Voltage sum monitoring is only effective if an external displacement voltage is connected to the displacement voltage measuring input.

2.19.1.2 Software Monitoring

Watchdog

For continuous monitoring of the program sequences, a time monitor is provided in the hardware (watchdog for hardware) that expires upon failure of the processor or an internal program, and causes a reset of the processor system with complete restart.

An additional software watchdog ensures that malfunctions during the processing of programs are discovered. This also initiates a restart of the processor system.

If the fault is not eliminated by the restart, a second restart attempt is initiated. If the fault is still present after three restart attempts within 30 s, the protection system will take itself out of service, and the red LED „ERROR“ lights up. The device ready relay drops out and alarms the device malfunction with its normally closed contact („life contact“).

2.19.1.3 Monitoring External Transformer Circuits

Interruptions or short circuits in the secondary circuits of the current and voltage transformers, as well as faults in the connections (important for commissioning!), are detected and reported by the device. To this end, the measured values are cyclically checked in the background as long as no fault detection is present.

Current Symmetry

During normal system operation the currents are assumed to be largely symmetrical. The symmetry is monitored in the device by magnitude comparison. The smallest phase current is compared to the largest phase current. Asymmetry is recognized if:

$|I_{min}| / |I_{max}| <$ **BAL. FACTOR I** as long as $I_{max} >$ **BALANCE I LIMIT**

I_{max} is the highest, I_{min} the lowest of the three phase currents. The symmetry factor **BAL. FACTOR I** (address 2905) represents the allowable asymmetry of the phase currents while the limit value **BALANCE I LIMIT** (address 2904) is the lower limit of the operating range of this monitoring (see Figure 2-153). The dropout ratio is about 97%.

After a settable time (5-100 s), this malfunction is signalled as „Fail I balance“ (no. 163).

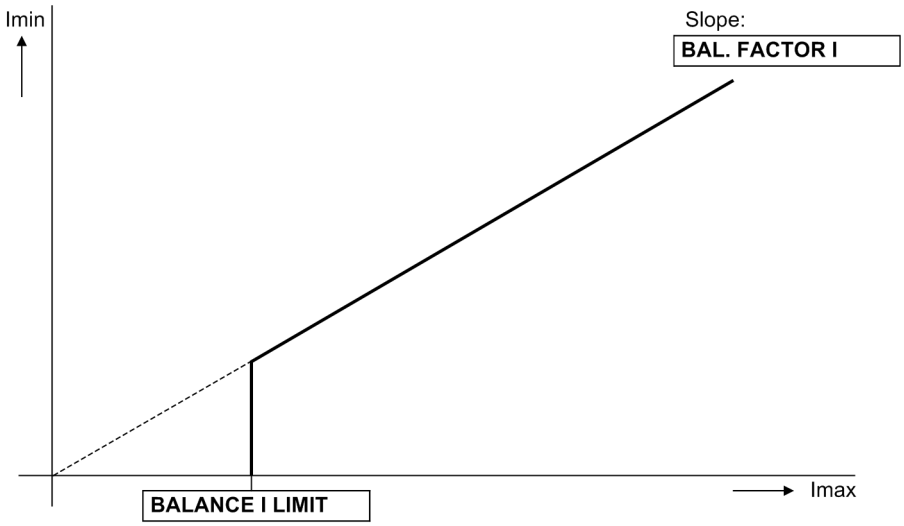

Figure 2-153 Current symmetry monitoring

Broken Wire

A broken wire of the protected line or in the current transformer secondary circuit can be detected, if the minimum current **PoleOpenCurrent** flows via the feeder. If the minimum phase current is below this limit while the other phase currents are above this limit, an interruption of this conductor may be assumed. If current asymmetry is also detected (see margin heading „Current Symmetry“) the device issues the message „Fail Conductor“ (No. 195).

Voltage Symmetry

During normal system operation the voltages are assumed to be largely symmetrical. The symmetry is monitored in the device by magnitude comparison. The smallest phase voltage is compared to the largest. Asymmetry is recognized if:

$|U_{min}| / |U_{max}| <$ **BAL. FACTOR U** as long as $|U_{max}| >$ **BALANCE U-LIMIT**

Thereby U_{max} is the largest of the three phase-to-phase voltages and U_{min} the smallest. The symmetry factor **BAL. FACTOR U** (address 2903) represents the allowable asymmetry of the voltages while the limit value **BALANCE U-LIMIT** (address 2902) is the lower limit of the operating range of this monitoring (see Figure 2-154). The resetting ratio is about 97 %.

After a settable time, this malfunction is signaled as „Fail U balance“ (no. 167).

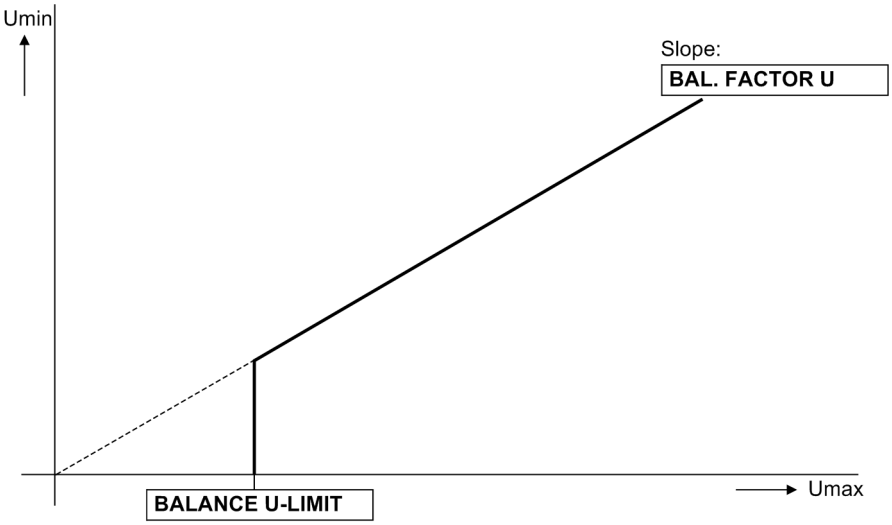

Figure 2-154 Voltage symmetry monitoring

Voltage Phase Sequence

Verification of the faulted phases, phase preference, direction measurement and polarisation with quadrature voltages usually require clockwise rotation of the measured values. The phase rotation of the measured voltages is checked by monitoring the voltage phase sequence

$\underline{U}_{L1}$ before $\underline{U}_{L2}$ before $\underline{U}_{L3}$

This check takes place if each measured voltage has a minimum magnitude of

$|U_{L1}|, |U_{L2}|, |U_{L3}| > 40\ V/\sqrt{3}$

In case of negative phase rotation, the indication „`Fail Ph. Seq.`“ (No. 171) is issued.

If the system has a negative phase rotation, this must have been set during the configuration of the power system data (refer to Section 2.1.2.1, address 235). In such event, the phase rotation monitoring applies to the corresponding opposite phase sequence.

Fast Asymmetrical Measuring Voltage Failure "Fuse Failure Monitor".

In the event of a measured voltage failure due to a short circuit fault or a broken conductor in the voltage transformer secondary circuit certain measuring loops may mistakenly see a voltage of zero. Simultaneously existing load currents may then cause a spurious pickup.

If fuses are used instead of a voltage transformer miniature circuit breaker (VT mcb) with connected auxiliary contacts, then the „Fuse Failure Monitor“ can detect problems in the voltage transformer secondary circuit. Of course, the VT miniature circuit breaker and the „Fuse Failure Monitor“ can be used at the same time.

Figures 2-155 and 2-156 depict the logic diagram of the „Fuse Failure Monitor“.

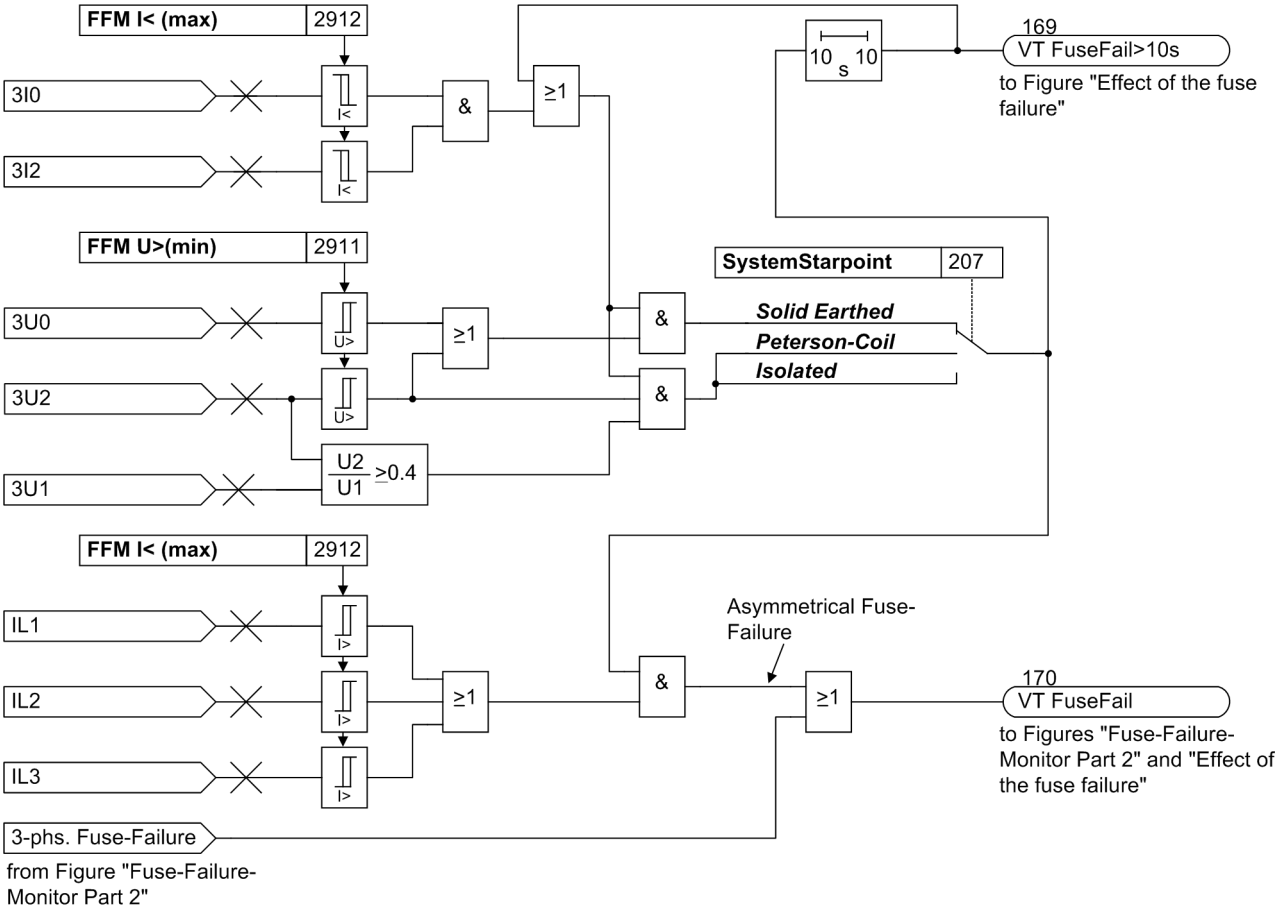

Figure 2-155 Fuse failure monitoring Part 1: Detection of asymmetrical measuring voltage failure

The **asymmetrical measured voltage failure** is characterised by its voltage asymmetry with simultaneous current symmetry. If there is substantial voltage asymmetry of the measured values, without asymmetry of the currents being registered at the same time, this indicates the presence of an asymmetrical failure in the voltage transformer secondary circuit.

The asymmetry of the voltage is detected by the fact that either the zero sequence voltage or the negative sequence voltage exceed a settable value **FFM U>(min)** (address 2911). The current is assumed to be sufficiently symmetrical if both the zero sequence as well as the negative sequence current are below the settable threshold **FFM I< (max)** (address 2912).

In non-earthed systems (address 207 **SystemStarpoint**), the zero-sequence system quantities are no reliable criterion since a considerable zero sequence voltage occurs also in case of a simple earth fault where a significant zero sequence current does not necessarily flow. Therefore, the zero sequence voltage is not evaluated in these systems but only the negative sequence voltage and the ratio between negative sequence and positive sequence voltage.

The immediate effect of the „Fuse failure monitor“ is signaled by means of the indication „VT FuseFail“ (No. 170). To detect an asymmetrical measuring voltage failure, at least one phase current must exceed the value **FFM I< (max)** (address 2912).

In case that zero sequence or negative sequence current arise within 10 s after detecting an asymmetrical measuring voltage failure, a short-circuit in the network is assumed and the signal „VT FuseFail“ is immediately reset. If the zero-sequence voltage or the negative-sequence voltage exceed the presettable value **FFM U>(min)** (address 2911) for more than 10 s, the signal „VT FuseFail>10s“ (No. 169) will be generated. In this status, a reset of the signal „VT FuseFail“ will no longer be effected by means of an increase of the zero-sequence current or the negative-sequence current, but only through the fact that the voltages in the zero-sequence system and in the negative-sequence system fall below the threshold value. The signal „VT FuseFail“ can also be generated independently from the quantity of the phase currents.

During a single-pole automatic reclose dead time, the „Fuse failure monitor“ does not detect an asymmetrical measuring voltage failure. Due to the de-energization in one phase, an operational asymmetry is caused on the primary side which cannot be distinguished from a measuring voltage failure in the secondary circuit (not represented in the logic diagram).

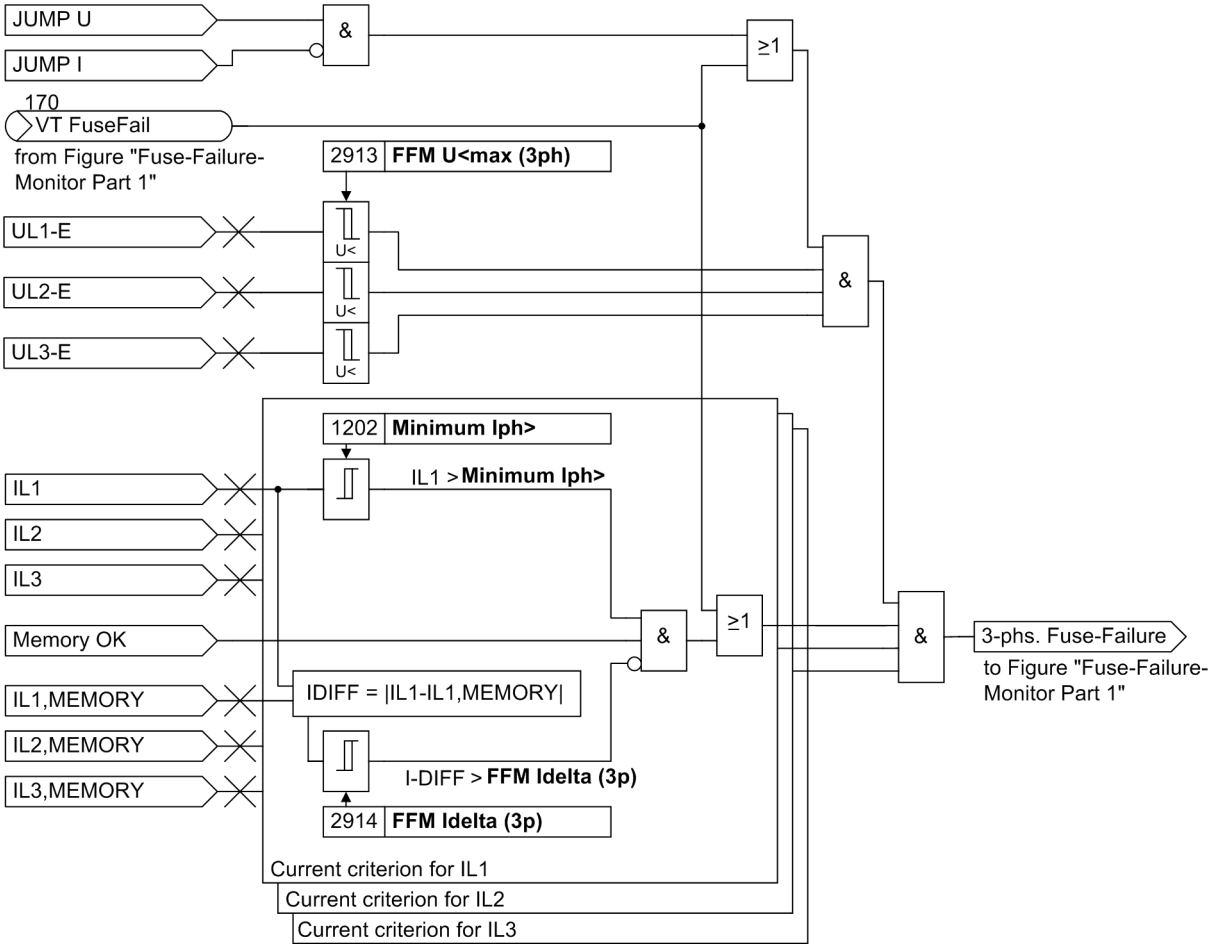

Figure 2-156 Fuse failure monitoring Part 2: Detection of three-phase measuring voltage failure

A **3-phase failure of the secondary measured voltages** can be distinguished from an actual system fault by the fact that the currents have no significant change in the event of a failure in the secondary measured voltage. For this reason, the current values are routed to a buffer so that the difference between present and stored current values can be analysed to recognise the magnitude of the current differential (current differential criterion), see Figure 2-156.

A three-pole measuring voltage failure is detected if:

- All 3 phase-to-earth voltages are smaller than the threshold **FFM U<max (3ph)** (address 2913),
- The current differential in all 3 phases is smaller than the threshold **FFM Idelta (3p)** (address 2914).
- All 3 phase current amplitudes are larger than the minimum current **Iph>** (address 1202) for impedance measurement of the distance protection.

A three-pole measuring voltage failure is also detected without the mentioned criteria if the signal „VT FuseFail“ (No. 170) previously has been generated by an asymmetrical measuring voltage failure. The measuring voltage failure is still detected in this state if the three phase-to-earth voltages subsequently fall below the threshold value **FFM U<max (3ph)** (address 2913).

The effect of the signals „VT FuseFail“ (No. 170) and „VT FuseFail>10s“ (No. 169) on the protection functions is described in the following section „Effect of the measuring voltage failure“.

Additional Measured Voltage Failure Monitoring „Fail U absent“

If no measuring voltage is available after power-on of the circuit breaker (e.g. because the voltage transformers are not connected), the absence of the voltage can be detected and reported by an additional monitoring function. Where circuit breaker auxiliary contacts are used, they should be used for monitoring as well. Figure 2-157 shows the logic diagram of the measured voltage failure monitoring. A failure of the measured voltage is detected if the following conditions are met at the same time:

- All 3 phase-to-earth voltages are less than **FFM U<max (3ph)**,
- At least 1 phase current is larger than **PoleOpenCurrent** or at least 1 breaker pole is closed (can be set),
- No protection function has picked up,
- This condition persists for a settable time **T V-Supervision** (default setting: 3 s).

The time **T V-Supervision** is required to prevent that a voltage failure is detected before the protection picks up.

If this monitoring function picks up, the indication „Fail U absent“ (no. 168) will be issued. The effect of this monitoring indication will be described in the following section „Effect of the Measuring Voltage Failure“.

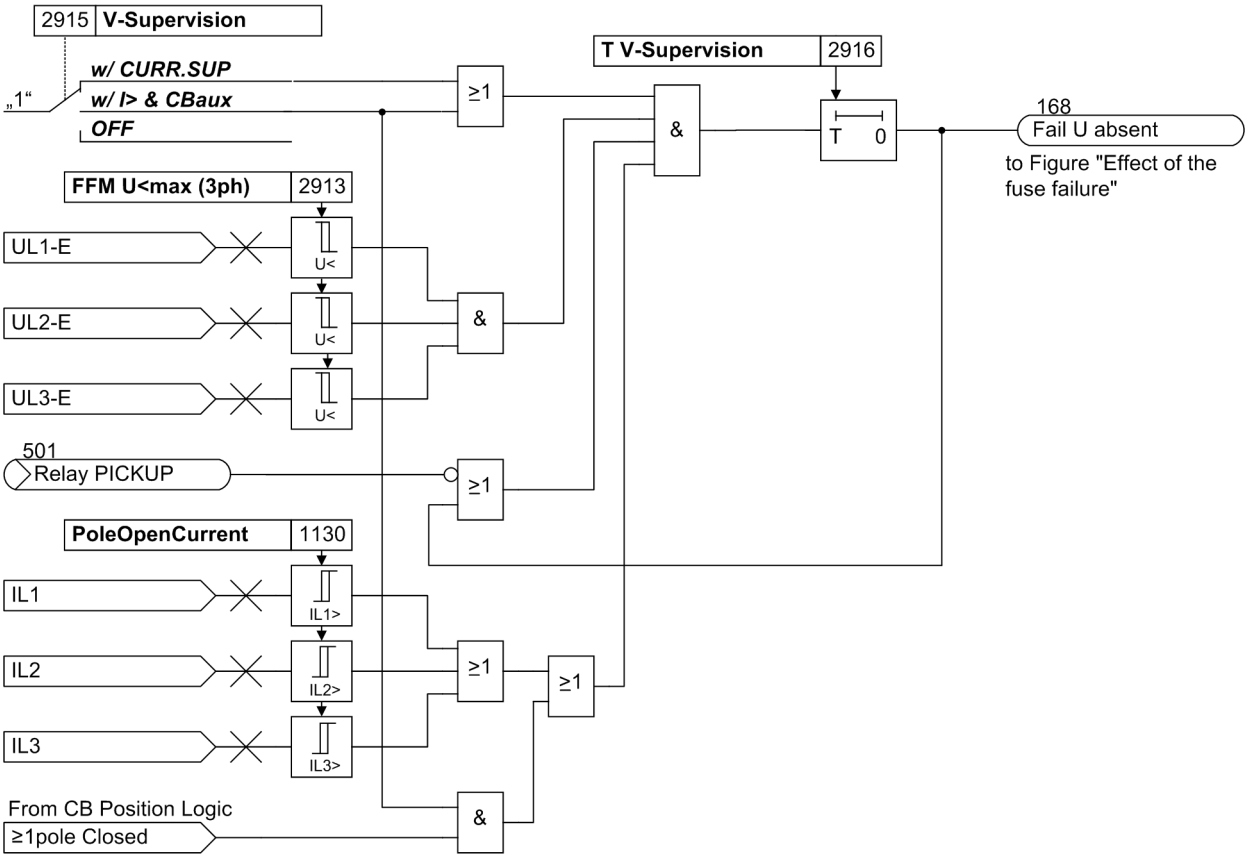

Figure 2-157 Logic diagram of the additional measured voltage failure monitoring „Fail U absent“

Effect of the Measuring Voltage Failure

In the event of a measuring voltage failure due to a short-circuit or broken conductor in the voltage transformer secondary circuit, some or all measuring loops may mistakenly see a voltage of zero. In case that load currents exist simultaneously, incorrect pickup could occur. If such a voltage failure is detected, the protection functions that operate on the basis of undervoltage are blocked. The O/C emergency operation is possible during the voltage failure, provided that the O/C protection is parameterized accordingly (refer to Section 2.11).

Figure 2-158 shows the effect on the protection functions in case that a measuring voltage is detected by the „fuse failure monitor“ „VT FuseFail“ (no. 170), „VT FuseFail>10s“ (no. 169), the additional measuring voltage failure monitoring „Fail U absent“ (no. 168) and the binary input of the VT miniature circuit breaker „>FAIL:Feeder VT“ (no. 361).

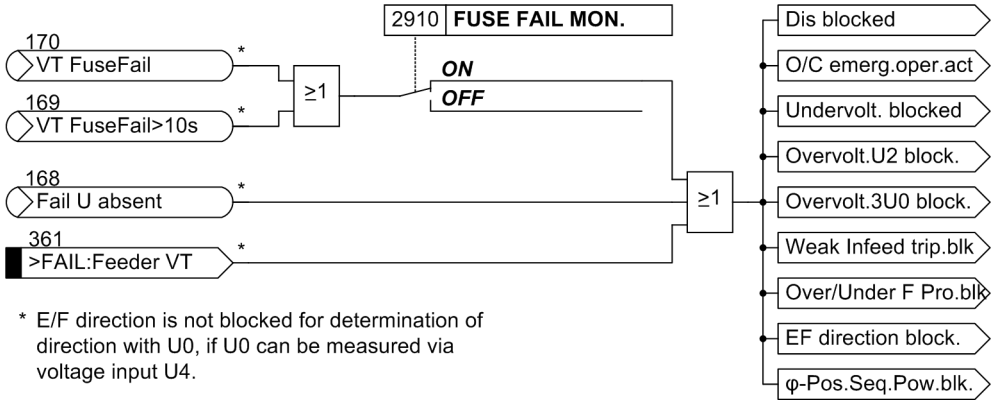

Figure 2-158 Effect of the measuring voltage failure

2.19.1.4 Monitoring the Phase Angle of the Positive Sequence Power

This monitoring function allows determining the direction of power flow. You can monitor the phase angle of the complex power, and generate an indication when the power phasor is inside a settable segment.

One example of this application is the indication of capacitive reactive power. The monitoring indication can then be used to control the overvoltage protection function. For this purpose, two angles must be set, as shown in Figure 2-159. In this example, φA = 200° and φB = 340° has been set.

If the measured phase angle $\varphi(\underline{S}_1)$ of the positive sequence power is within the area of the P-Q plane delimited by the angles φA and φB, the indication „φ(PQ Pos. Seq.)“ (No. 130) is output. The angles φA and φB can be freely set in the range between 0° and 359°. The area starts at φA and extends in a mathematically positive sense as far as the angle φB. A hysteresis of 2° is provided to prevent erroneous indications which might emerge at the threshold limits.

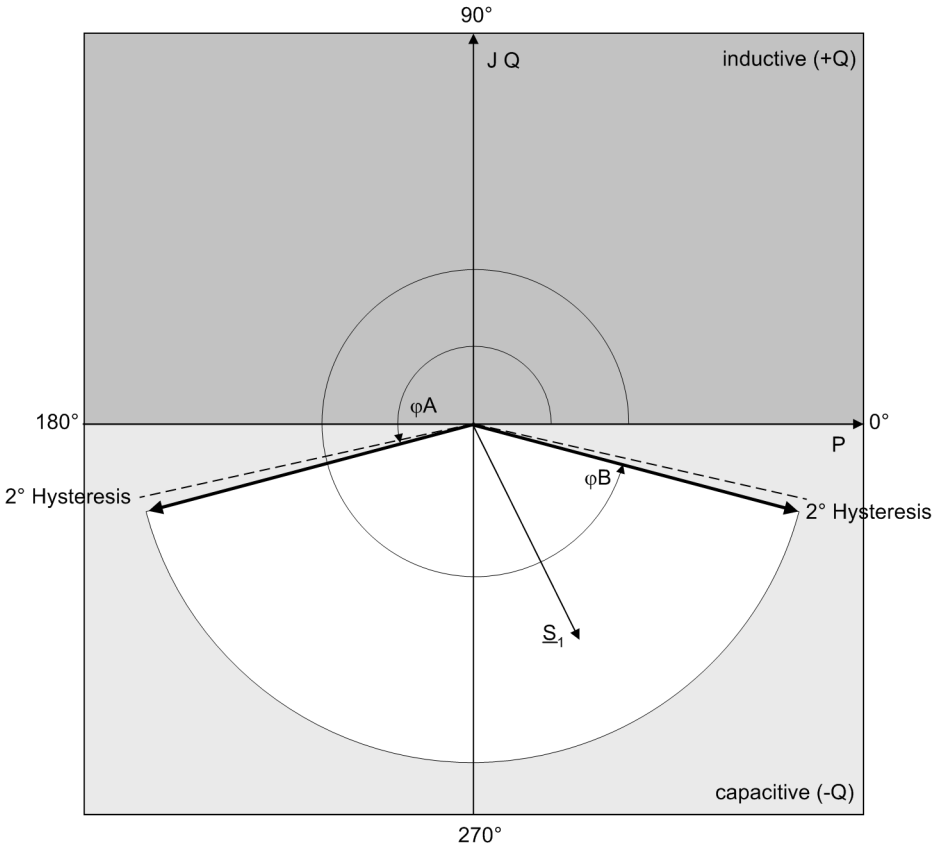

Figure 2-159 Characteristic of the Positive Sequence System Phase Angle Monitoring

The monitoring function can also be used for the display of negative active power. In this case the areas must be defined as shown in Figure 2-160.

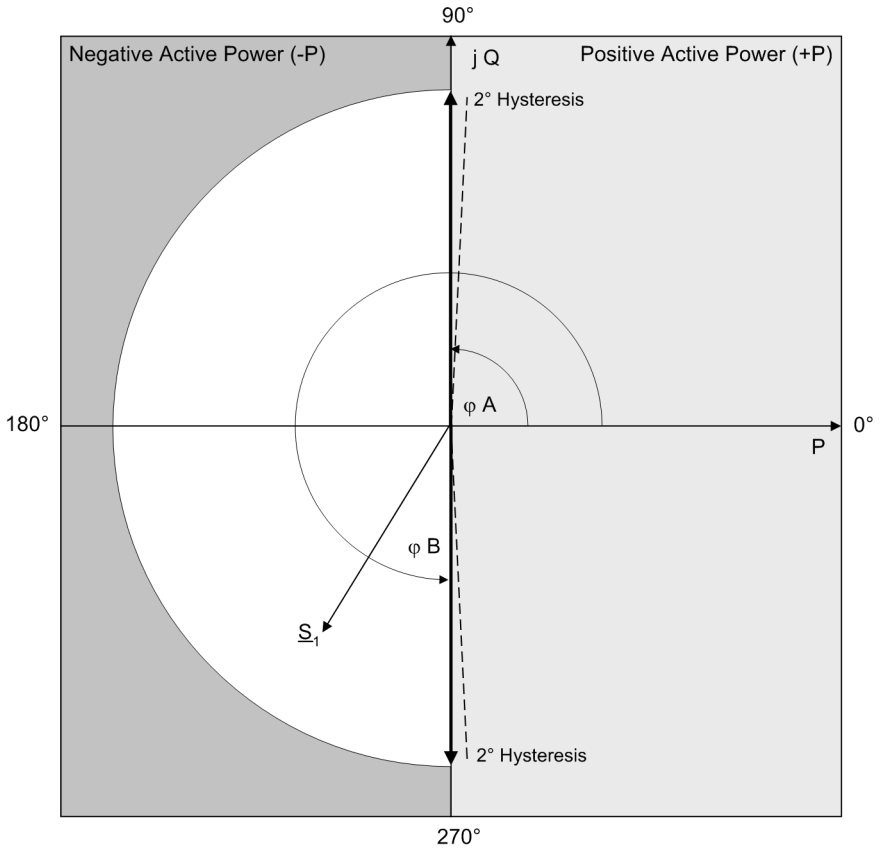

Figure 2-160 Phase Angle Monitoring for Negative Active Power

The two angles must be at least 3° apart; if they are not, monitoring is blocked, and the indication „φ Set wrong“ (No. 132) is output.

The following conditions must be fulfilled for measurement to be enabled:

- The positive sequence current $\underline{I}_1$ is higher than the value set in parameter 2943 **I1>**.
- The positive sequence voltage $\underline{U}_1$ is higher than the value set in parameter 2944 **U1>**.
- The angles set in address 2941 φ**A** and 2942 φ**B** must be at least 3° apart. Incorrect parameter settings cause the indication 132 „φ Set wrong“ to be output.
- The „Fuse-Failure-Monitor“ and the measured voltage failure monitoring must not have responded, and binary input indication 361 „>FAIL:Feeder VT“ must not be present.

If monitoring is not active, this fact is signaled by the indication „φ(PQ Pos) block“ (No. 131).

Figure 2-161 shows the logic of the positive sequence system phase angle monitoring.

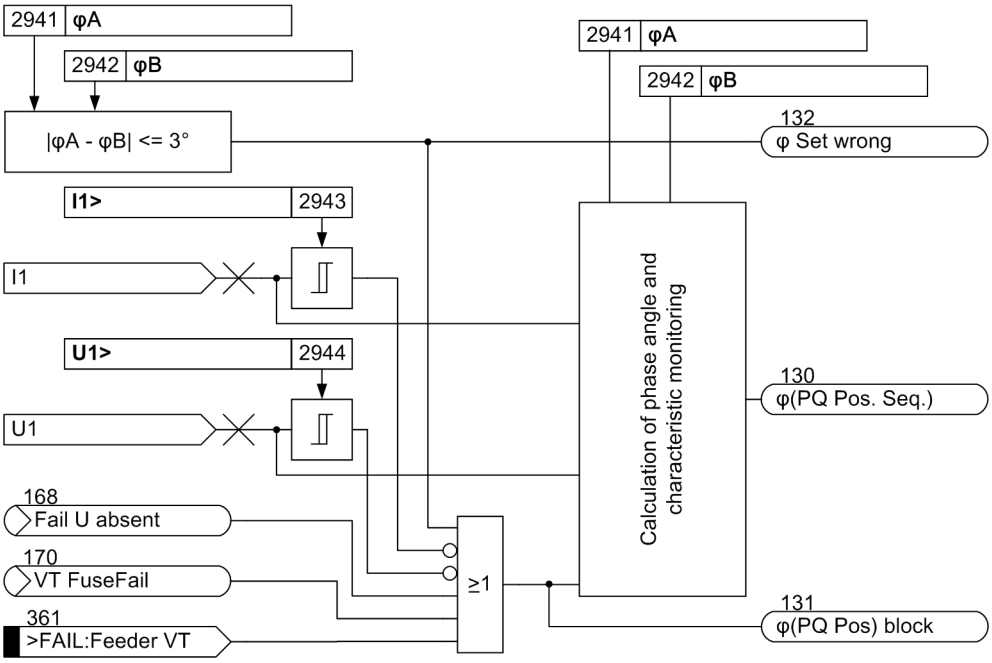

Figure 2-161 Logic of the Positive Sequence System Phase Angle Monitoring

2.19.1.5 Malfunction Reaction

Depending on the kind of fault detected, an alarm is given, the processor is restarted or the device is taken out of operation. After three unsuccessful restart attempts, the device is taken out of service. The device ready relay drops out and indicates the device failure with its NC contact („life contact“). The red LED „ERROR“ on the device front lights up, provided that there is an internal auxiliary voltage, and the green LED „RUN“ goes off. If the internal auxiliary voltage supply fails, all LEDs are dark. Table 2-9 shows a summary of the monitoring functions and the malfunction responses of the device.

Table 2-9 Summary of malfunction responses of the device

Monitoring	Possible Causes	Malfunction Response	Indication (No.)	Output
Auxiliary Supply Voltage Loss	External (aux. voltage) internal (converter)	Device out of operation or alarm	All LEDs dark „Error 5V“ (144)	DOK[2)] drops out
Measured Value Acquisition	Internal (converter or reference voltage)	Protection out of operation, alarm	LED „ERROR“ „Error A/D-conv.“ (181)	DOK[2)] drops out
Buffer battery	Internal (battery)	Indication	„Fail Battery“ (177)	As allocated
Hardware Watchdog	Internal (processor failure)	Device not in operation	LED „ERROR“	DOK[2)] drops out
Software Watchdog	Internal (program sequence)	Restart attempt [1)]	LED „ERROR“	DOK[2)] drops out
RAM	Internal (RAM)	Restart attempt [1)]), Restart abort Device not in operation	LED flashes	DOK[2)] drops out
ROM	Internal (EPROM)	Restart attempt [1)]	LED „ERROR“	DOK[2)] drops out
Settings memory	internal (Flash-EPROM or RAM)	Restart attempt [1)]	LED „ERROR“	DOK[2)] drops out
Scanning frequency	Internal (clock generator)	Restart attempt [1)]	LED „ERROR“	DOK[2)] drops out
1 A/5 A setting	1/5 A jumper wrong	Messages: Protection out of operation	„Error1A/5Awrong“ (192) „Error A/D-conv.“ (181) LED „ERROR“	DOK[2)] drops out
Adjustment values	Internal (EEPROM or RAM)	Indication: Use of default values	„Alarm adjustm.“ (193)	As allocated
ADC offset	Internal (ADC)	Indication	„Error Offset“ (191)	as allocated
Earth current transformer sensitive/insensitive	I/O module does not correspond to the order number (MLFB) of the device.	Messages: Protection out of operation	„Error neutralCT“ (194), „Error A/D-conv.“ (181) LED „ERROR“	DOK[2)] drops out
Modules	Module does not comply with ordering number (MLFB).	Messages: Protection out of operation	„Error Board BG1...7“ (183 ... 189) and if applicable „Error A/D-conv.“. (181)	DOK[2)] drops out
Current sum	Internal (measured value acquisition)	Indication	„Failure Σ I“ (162)	As allocated
Current symmetry	External (power system or current transformer)	Indication	„Fail I balance“ (163)	As allocated
Broken Conductor	External (power system or current transformer)	Message	„Fail Conductor“ (195)	As allocated
Voltage sum	Internal (measured value acquisition)	Indication	„Fail Σ U Ph-E“ (165)	As allocated
Voltage symmetry	External (power system or voltage transformer)	Indication	„Fail U balance“ (167)	As allocated
Voltage phase sequence	External (power system or connection)	Indication	„Fail Ph. Seq.“ (171)	As allocated

Monitoring	Possible Causes	Malfunction Response	Indication (No.)	Output
Voltage failure, 3-phase „Fuse Failure Monitor“	External (power system or connection)	Message Distance protection is blocked, Undervoltage protection is blocked, Weak-infeed tripping is blocked, Frequency protection is blocked, and Direction determination of the earth fault protection is blocked	„VT FuseFail>10s“ (169), „VT FuseFail“ (170)	as allocated
Voltage failure, 1-/2-phase „Fuse Failure Monitor“	External (voltage transformers)	Message Distance protection is blocked, Undervoltage protection is blocked, Weak-infeed tripping is blocked, Frequency protection is blocked, and Direction determination of the earth fault protection is blocked	„VT FuseFail>10s“ (169), „VT FuseFail“ (170)	As allocated
Voltage failure, 3-phase	External (power system or connection)	Indication Distance protection is blocked, Undervoltage protection is blocked, Weak-infeed tripping is blocked, Frequency protection is blocked, and Direction determination of the earth fault protection is blocked	„Fail U absent“ (168)	As allocated
Trip Circuit Monitoring	External (trip circuit or control voltage)	Message	„FAIL: Trip cir.“ (6865)	as allocated

1) after three unsuccessful restarts, the device is taken out of service.

2) DOK = „Device OK“ = NC contact of the operational readiness relay = life contact

2.19.1.6 Setting Notes

General

The sensitivity of the measured value monitoring can be changed. Experiential values set ex works are adequate in most cases. If particularly high operational asymmetries of the currents and/or voltages are expected, or if one or more monitoring functions pick up sporadically during normal operation, the sensitivity settings should be made less sensitve..

The measurement supervision can be switched ***ON*** or ***OFF*** in address 2901 **MEASURE. SUPERV**.

Symmetry monitoring

Address 2902 **BALANCE U-LIMIT** determines the limit voltage (phase-to-phase), above which the voltage symmetry monitoring is effective. Address 2903 **BAL. FACTOR U** is the associated balance factor, i.e. the gradient of the balance characteristic. The indication „Fail U balance“ (no. 167) can be delayed at address 2908 **T BAL. U LIMIT**. These settings can only be changed using DIGSI at **Additional Settings**.

Address 2904 **BALANCE I LIMIT** determines the limit current above which the current symmetry monitoring is effective. Address 2905 **BAL. FACTOR I** is the associated balance factor, i.e. the gradient of the balance characteristic. The indication „Fail I balance“ (no. 163) can be delayed at address 2909 **T BAL. I LIMIT**. These settings can only be changed using DIGSI at **Additional Settings**.

Sum monitoring

Address 2906 **ΣI THRESHOLD** determines the limit current above which the current sum monitoring is activated (absolute portion, only relative to I_N). The relative portion (relative to the maximum phase current) for activating the current sum monitoring is set at address 2907 **ΣI FACTOR**. These settings can only be changed using DIGSI at **Additional Settings**.

Note

Current sum monitoring can operate properly only when the residual current of the protected line is fed to the fourth current input (I_4) of the relay.

Asymmetrical measuring voltage failure "Fuse Failure Monitor"

The settings for the „fuse failure monitor“ for non-symmetrical measuring voltage failure must be selected such that on the one hand it is reliably activated if a phase voltage fails (address 2911 **FFM U>(min)**), but does not pick up on earth faults in an earthed network on the other hand. Accordingly, address 2912 **FFM I< (max)** must be set sufficiently sensitive (below the smallest fault current during earth faults). This setting is only possible in DIGSI at **Display Additional Settings**.

In address 2910 **FUSE FAIL MON.**, the „Fuse Failure Monitor“, e.g. during asymmetrical testing, can be switched ***OFF***.

Three-phase measuring voltage failure "Fuse Failure Monitor"

In address 2913 **FFM U<max (3ph)** the minimum voltage threshold is set. If the measured voltage drops below this threshold and a simultaneous current jump which exceeds the limits according to address 2914 **FFM Idelta (3p)** is not detected while all three phase currents are greater than the minimum current required for the impedance measurement by the distance protection according to address 1202 **Minimum Iph>**, a three-phase measured voltage failure is recognized. These settings can only be changed via DIGSI at **Display Additional Settings**.

In address 2910 **FUSE FAIL MON.**, the „Fuse Failure Monitor“, e.g. during asymmetrical testing, can be switched ***OFF***.

Measured voltage failure monitoring

In address 2915 **V-Supervision**, the measured voltage supervision can be switched to ***w/ CURR.SUP***, ***w/ I> & CBaux*** or ***OFF***. Address 2916 **T V-Supervision** is used to set the waiting time of the voltage failure supervision. This setting can only be changed in DIGSI at **Display Additional Settings**.

Circuit breaker for voltage transformers

If a circuit breaker for voltage transformers (VT mcb) is installed in the secondary circuit of the voltage transformers, the status is sent, via binary input, to the device informing it about the position of the VT mcb. If a short-circuit in the secondary side initiates the tripping of the VT mcb, the distance protection function has to be blocked immediately, since otherwise it would be spuriously tripped due to the lacking measured voltage during a load current. The blocking must be faster than the first stage of the distance protection.This requires an extremely short reaction time for VT mcb (≤ 4 ms at 50 Hz, ≤ 3 ms at 60 Hz nominal frequency). If this cannot be ensured, the reaction time is to be set under address 2921 **T mcb**.

Monitoring the phase angle of the positive sequence power

The parameters 2943 **I1>** and 2944 **U1>** are used to specify the minimum positive sequence system quantities required for measurement of the positive sequence power. The angles set in address 2941 φ**A** and 2942 φ**B** must be at least 3° apart. Incorrect parameter settings cause the indication 132 „φ Set wrong“ to be output.

2.19.1.7 Settings

Addresses which have an appended "A" can only be changed with DIGSI, under Additional Settings.

The table indicates region-specific presettings. Column C (configuration) indicates the corresponding secondary nominal current of the current transformer.

Addr.	Parameter	C	Setting Options	Default Setting	Comments
2901	MEASURE. SUPERV		ON OFF	ON	Measurement Supervision
2902A	BALANCE U-LIMIT		10 .. 100 V	50 V	Voltage Threshold for Balance Monitoring
2903A	BAL. FACTOR U		0.58 .. 0.95	0.75	Balance Factor for Voltage Monitor
2904A	BALANCE I LIMIT	1A	0.10 .. 1.00 A	0.50 A	Current Balance Monitor
		5A	0.50 .. 5.00 A	2.50 A	
2905A	BAL. FACTOR I		0.10 .. 0.95	0.50	Balance Factor for Current Monitor
2906A	ΣI THRESHOLD	1A	0.05 .. 2.00 A	0.10 A	Summated Current Monitoring Threshold
		5A	0.25 .. 10.00 A	0.50 A	
2907A	ΣI FACTOR		0.00 .. 0.95	0.10	Summated Current Monitoring Factor
2908A	T BAL. U LIMIT		5 .. 100 sec	5 sec	T Balance Factor for Voltage Monitor
2909A	T BAL. I LIMIT		5 .. 100 sec	5 sec	T Current Balance Monitor
2910	FUSE FAIL MON.		ON OFF	ON	Fuse Failure Monitor
2911A	FFM U>(min)		10 .. 100 V	30 V	Minimum Voltage Threshold U>
2912A	FFM I< (max)	1A	0.10 .. 1.00 A	0.10 A	Maximum Current Threshold I<
		5A	0.50 .. 5.00 A	0.50 A	
2913A	FFM U<max (3ph)		2 .. 100 V	15 V	Maximum Voltage Threshold U< (3phase)
2914A	FFM Idelta (3p)	1A	0.05 .. 1.00 A	0.10 A	Delta Current Threshold (3phase)
		5A	0.25 .. 5.00 A	0.50 A	
2915	V-Supervision		w/ CURR.SUP w/ I> & CBaux OFF	w/ CURR.SUP	Voltage Failure Supervision
2916A	T V-Supervision		0.00 .. 30.00 sec	3.00 sec	Delay Voltage Failure Supervision
2921	T mcb		0 .. 30 ms	0 ms	VT mcb operating time
2941	φA		0 .. 359 °	200 °	Limit setting PhiA
2942	φB		0 .. 359 °	340 °	Limit setting PhiB
2943	I1>	1A	0.05 .. 2.00 A	0.05 A	Minimum value I1>
		5A	0.25 .. 10.00 A	0.25 A	
2944	U1>		2 .. 70 V	20 V	Minimum value U1>

2.19.1.8 Information List

No.	Information	Type of Information	Comments
130	φ(PQ Pos. Seq.)	OUT	Load angle Phi(PQ Positive sequence)
131	φ(PQ Pos) block	OUT	Load angle Phi(PQ) blocked
132	φ Set wrong	OUT	Setting error: |PhiA - PhiB| < 3°
161	Fail I Superv.	OUT	Failure: General Current Supervision
162	Failure Σ I	OUT	Failure: Current Summation
163	Fail I balance	OUT	Failure: Current Balance
164	Fail U Superv.	OUT	Failure: General Voltage Supervision
165	Fail Σ U Ph-E	OUT	Failure: Voltage summation Phase-Earth
167	Fail U balance	OUT	Failure: Voltage Balance
168	Fail U absent	OUT	Failure: Voltage absent
169	VT FuseFail>10s	OUT	VT Fuse Failure (alarm >10s)
170	VT FuseFail	OUT	VT Fuse Failure (alarm instantaneous)
171	Fail Ph. Seq.	OUT	Failure: Phase Sequence
195	Fail Conductor	OUT	Failure: Broken Conductor
196	Fuse Fail M.OFF	OUT	Fuse Fail Monitor is switched OFF
197	MeasSup OFF	OUT	Measurement Supervision is switched OFF

2.19.2 Trip circuit supervision

2.19.2.1 Method of Operation

Trip Circuit Supervision

The 7SA522 incorporates an integrated trip circuit supervision function. Depending on the number of available binary inputs (not connected to a common potential), supervision with one or two binary inputs can be selected. If the routing of the required binary inputs does not comply with the selected supervision mode, an alarm is issued („TripC ProgFAIL“) with identification of the non-compliant circuit. When using two binary inputs, malfunctions in the trip circuit can be detected under all circuit breaker conditions. When only one binary input is used, malfunctions in the circuit breaker itself cannot be detected. If single-pole tripping is possible, a separate trip circuit supervision can be implemented for each circuit breaker pole provided the required binary inputs are available.

Supervision with Two Binary Inputs

When using two binary inputs, these are connected according to Figure 2-162 parallel to the associated trip contact on one side, and parallel to the circuit breaker auxiliary contacts on the other.

A precondition for the use of the trip circuit supervision is that the control voltage for the circuit breaker is higher than the total of the minimum voltages drops at the two binary inputs ($U_{Ctrl} > 2 \cdot U_{Blmin}$). Since at least 19 V are needed for each binary input, the supervision function can only be used with a system control voltage of over 38 V.

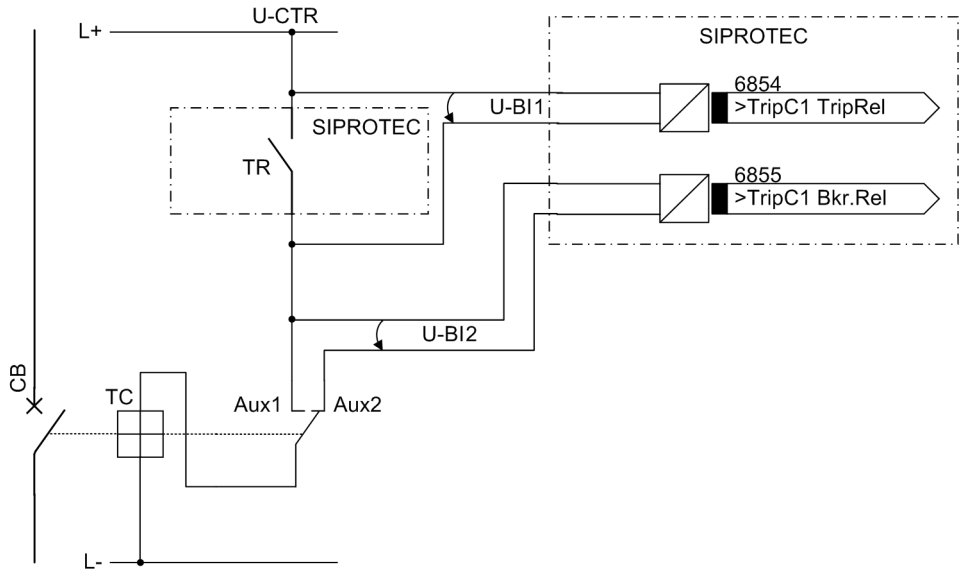

Figure 2-162 Principle of the trip circuit supervision with two binary inputs

TR	Trip relay contact
CB	Circuit breaker
TC	Circuit breaker trip coil
Aux1	Circuit breaker auxiliary contact (NO contact)
Aux2	Circuit breaker auxiliary contact (NC contact)
U-CTR	Control voltage (trip voltage)
U-BI1	Input voltage of 1st binary input
U-BI2	Input voltage of 2nd binary input

Supervision with two binary inputs not only detects interruptions in the trip circuit and loss of control voltage, it also supervises the response of the circuit breaker using the position of the circuit breaker auxiliary contacts.

Depending on the conditions of the trip contact and the circuit breaker, the binary inputs are activated (logical condition „H“ in the following table), or short-circuited (logical condition „L“).

A state in which both binary inputs are not activated („L“) is only possible in intact trip circuits for a short transition period (trip relay contact closed but circuit breaker not yet open).

A continuous state of this condition is only possible when the trip circuit has been interrupted, a short-circuit exists in the trip circuit, a loss of battery voltage occurs, or malfunctions occur with the circuit breaker mechanism. Therefore, it is used as supervision criterion.

Table 2-10 Condition table for binary inputs, depending on RTC and CB position

No.	Trip Contact	Circuit Breaker	Aux 1	Aux 2	BI 1	BI 2	Dynamic State	Static State
1	Open	ON	Closed	Open	H	L	Normal operation with circuit breaker closed	
2	Open	OFF	Open	Closed	H	H	Normal operation with circuit breaker open	
3	Closed	ON	Closed	Open	L	L	Transition or malfunction	Malfunction
4	Closed	OFF	Open	Closed	L	H	TR has tripped successfully	

The conditions of the two binary inputs are checked periodically. A query takes place about every 500 ms. If three consecutive conditional checks detect an abnormality, a fault indication is output (see Figure 2-163). The repeated measurements determine the delay of the alarm message and avoid that an alarm is output during short transition periods. After clearance of the failure in the trip circuit, the failure alarm automatically resets with the same time delay.

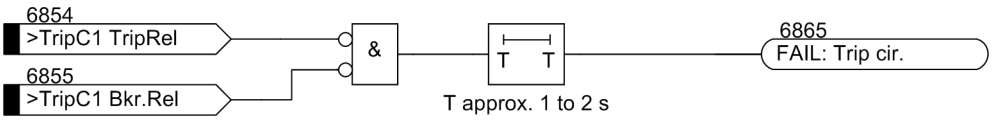

Figure 2-163 Logic diagram of the trip circuit supervision with two binary inputs

Supervision with One Binary Input

According to Figure 2-164, the binary input is connected in parallel to the respective command relay contact of the protection device. The circuit breaker auxiliary contact is bridged with a high-resistance bypass resistor R.

The control voltage for the circuit breaker should be at least twice as high as the minimum voltage drop at the binary input ($U_{Ctrl} > 2 \cdot U_{BImin}$). Since at least 19 V are needed for the binary input, the monitor can be used with a system control voltage of over 38 V.

A calculation example for the bypass resistor R is shown in the configuration notes in Section „Mounting and Connections“, margin heading „Trip Circuit Supervision“.

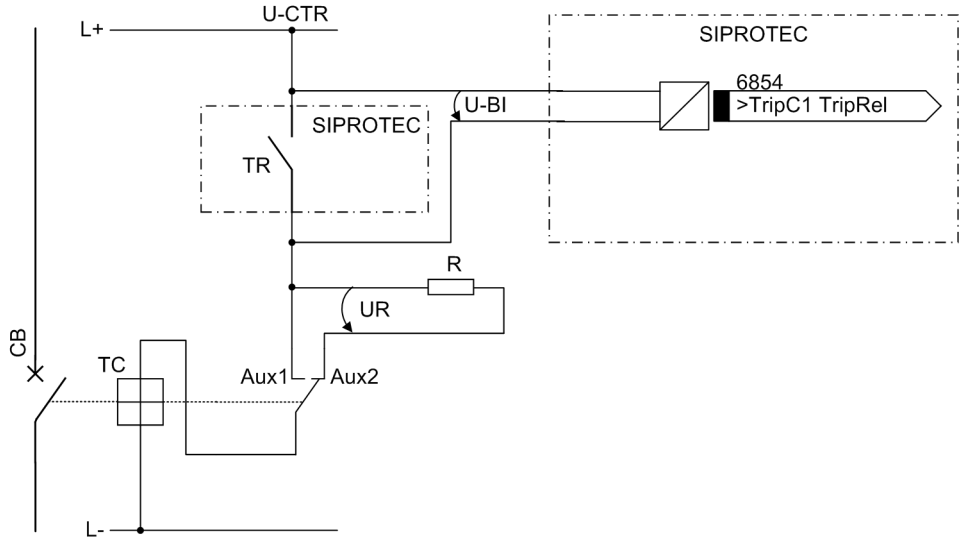

Figure 2-164 Principle of the trip circuit supervision with one binary input

TR	Trip relay contact
CB	Circuit breaker
TC	Circuit breaker trip coil
Aux1	Circuit breaker auxiliary contact (NO contact)
Aux2	Circuit breaker auxiliary contact (NC contact)
U-CTR	Control voltage for trip circuit
U-BI	Input voltage of binary input
R	Bypass resistor
UR	Voltage across the bypass resistor

During normal operation, the binary input is activated (logical condition „H“) when the trip contact is open and the trip circuit is intact, because the supervision circuit is closed either by the circuit breaker auxiliary contact (if the circuit breaker is closed) or through the bypass resistor R. Only as long as the trip contact is closed, the binary input is short-circuited and thereby deactivated (logical condition „L“).

If the binary input is permanently deactivated during operation, an interruption in the trip circuit or a failure of the (trip) control voltage can be assumed.

The trip circuit supervision does not operate during system faults. A momentary closed tripping contact does not lead to a fault indication. If, however, other trip relay contacts from different devices are connected in parallel in the trip circuit, the fault indication must be delayed by **Alarm Delay** (see also Figure 2-165). After clearance of the failure in the trip circuit, the fault message automatically resets with the same time delay.

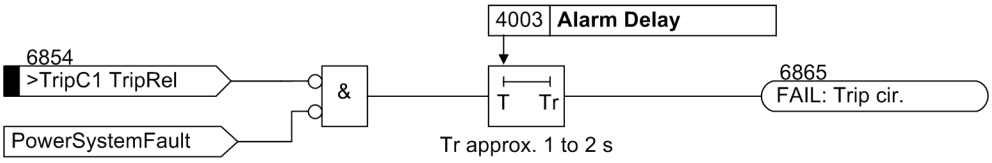

Figure 2-165 Logic diagram for trip circuit supervision with one binary input

2.19.2.2 Setting Notes

General

The number of circuits to be supervised was set during the configuration in address 140 **Trip Cir. Sup.** (Section 2.1.1.2). If the trip circuit supervision is not used at all, the setting ***Disabled*** must be applied there.

The trip circuit supervision can be switched ***ON*** or ***OFF*** in address 4001 **FCT TripSuperv.**. The number of binary inputs that shall be used in each of the supervised circuits is set in address 4002 **No. of BI**. If the routing of the binary inputs required for this does not comply with the selected supervision mode, an alarm is given („TripC1 ProgFAIL ...“, with identification of the non-compliant circuit).

Supervision with one binary input

The alarm for supervision with two binary inputs is always delayed by approx. 1 s to 2 s, whereas the delay time of the alarm for supervision with one binary input can be set in address 4003 **Alarm Delay**. 1 s to 2 s are sufficient if only the 7SA522 device is connected to the trip circuits as the trip circuit supervision does not operate during a system fault. If, however, trip contacts from other devices are connected in parallel in the trip circuit, the alarm must be delayed such that the longest trip command duration can be reliably bridged.

2.19.2.3 Settings

Addr.	Parameter	Setting Options	Default Setting	Comments
4001	FCT TripSuperv.	ON OFF	OFF	TRIP Circuit Supervision is
4002	No. of BI	1 .. 2	2	Number of Binary Inputs per trip circuit
4003	Alarm Delay	1 .. 30 sec	2 sec	Delay Time for alarm

2.19.2.4 Information List

No.	Information	Type of Information	Comments
6854	>TripC1 TripRel	SP	>Trip circuit superv. 1: Trip Relay
6855	>TripC1 Bkr.Rel	SP	>Trip circuit superv. 1: Breaker Relay
6856	>TripC2 TripRel	SP	>Trip circuit superv. 2: Trip Relay
6857	>TripC2 Bkr.Rel	SP	>Trip circuit superv. 2: Breaker Relay
6858	>TripC3 TripRel	SP	>Trip circuit superv. 3: Trip Relay
6859	>TripC3 Bkr.Rel	SP	>Trip circuit superv. 3: Breaker Relay
6861	TripC OFF	OUT	Trip circuit supervision OFF
6865	FAIL: Trip cir.	OUT	Failure Trip Circuit
6866	TripC1 ProgFAIL	OUT	TripC1 blocked: Binary input is not set
6867	TripC2 ProgFAIL	OUT	TripC2 blocked: Binary input is not set
6868	TripC3 ProgFAIL	OUT	TripC3 blocked: Binary input is not set

2.20 Function Control and Circuit Breaker Test

2.20.1 Function Control

The function control is the control centre of the device. It coordinates the sequence of the protection and ancillary functions, processes their decisions and the information coming from the power system.

Applications

- Line energization recognition,
- Processing of the circuit breaker position,
- Open Pole Detector,
- Fault detection logic,
- Tripping logic.

2.20.1.1 Line Energization Recognition

During energization of the protected object, several measures may be required or desirable. Following a manual closure onto a short-circuit, immediate trip of the circuit breaker is usually desired. In the distance protection, for example, this is implemented by activation of the overreaching zone Z1B and the switch onto fault function for a short period following manual closure. In addition, at least one stage of each short-circuit protection function can be selected to trip without delay following line-energizion as described in the corresponding sections. See also Section 2.1.4.1 at margin heading „Circuit breaker status“.

The manual closing command must be indicated to the device via a binary input. In order to be independent of the duration that the switch is closed, the command is set to a defined length in the device (adjustable with the address 1150 **SI Time Man.Cl**). This setting can only be changed using DIGSI at **Additional Settings**. Figure 2-166 shows the logic diagram.

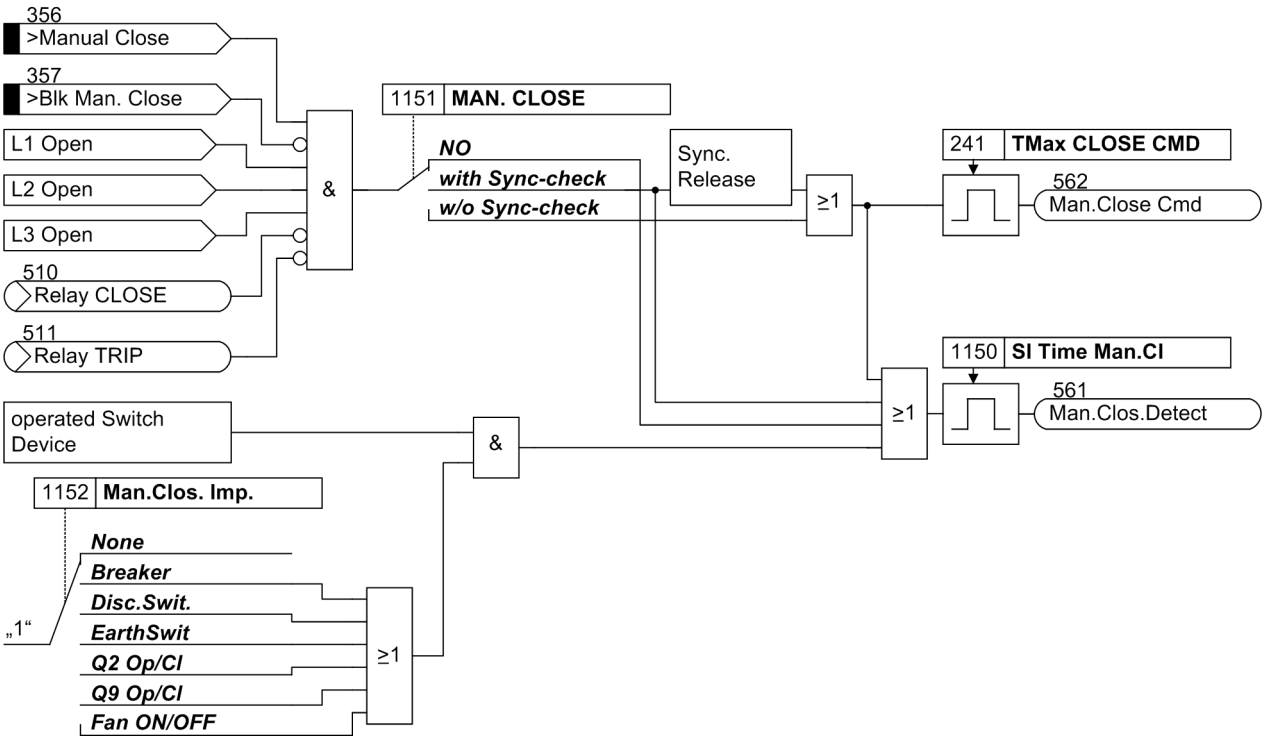

Figure 2-166 Logic diagram of the manual closing procedure

Reclosure via the integrated control functions - on-site control, control via DIGSI, control via serial interface - can have the same effect as manual closure, see parameter 1152 Chapter 2.1.4.1 at margin heading „Circuit Breaker Status“.

If the device has an integrated automatic reclosure, the integrated manual closure logic of the 7SA522 automatically distinguishes between an external control command via the binary input and an automatic reclosure by the internal automatic reclosure so that the binary input „>Manual Close“ can be connected directly to the control circuit of the close coil of the circuit breaker (Figure 2-167). Each closing operation that is not initiated by the internal automatic reclosure function is interpreted as a manual closure, even it has been initiated by a control command from the device.

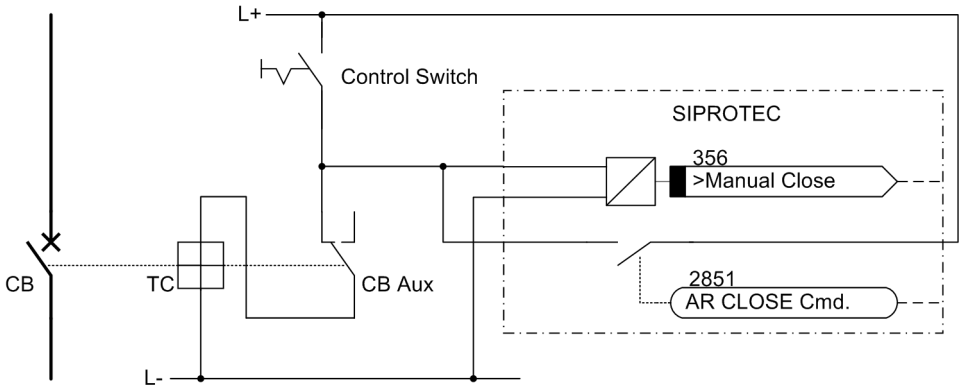

Figure 2-167 Manual closure with internal automatic reclosure

CB Circuit breaker
TC Circuit breaker close coil
CBaux Circuit breaker auxiliary contact

If, however, external close commands which should not activate the manual close function are possible (e.g. external reclosure device), the binary input „>Manual Close“ must be triggered by a separate contact of the control switch (Figure 2-168).

If in that latter case a manual close command can also be given by means of an internal control command from the device, such a command must be combined with the manual CLOSE function via parameter 1152 **Man.Clos. Imp.** (Figure 2-166).

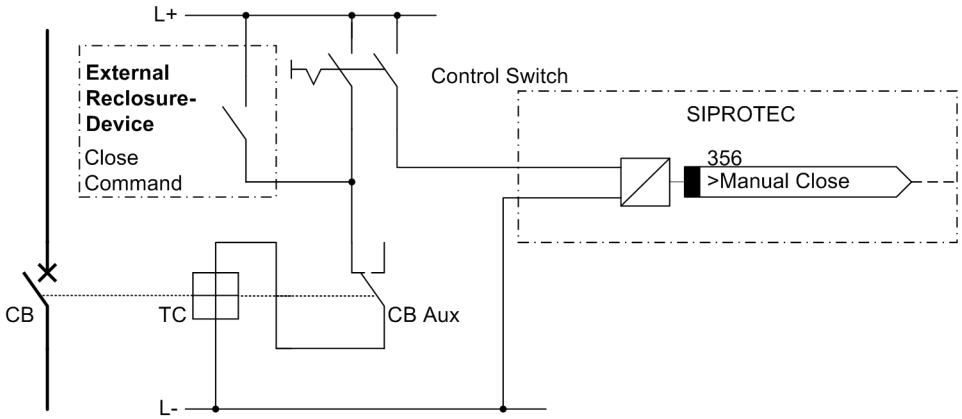

Figure 2-168 Manual closing with external automatic reclosure device

CB	Circuit breaker
TC	Circuit breaker close coil
CBaux	Circuit breaker auxiliary contact

Besides the manual CLOSE detection, the device records any energization of the line via the integrated line energization detection. This function processes a change-of-state of the measured quantities as well as the position of the breaker auxiliary contacts. The current status of the circuit breaker is detected, as described in the following Section at „Detection of the Circuit Breaker Position“. The criteria for the line energization detection change according to the local conditions of the measuring points and the setting of the parameter address 1134 **Line Closure** (see Section 2.1.4 at margin heading „Circuit Breaker Status“).

The phase currents and the phase-to-earth voltages are available as measuring quantities. A flowing current excludes that the circuit breaker is open (exception: a fault between current transformer and circuit breaker). If the circuit breaker is closed, it may, however, still occur that no current is flowing. The voltages can only be used as a criterion for the de-energised line if the voltage transformers are installed on the feeder side. Therefore, the device only evaluates those measuring quantities that provide information on the status of the line according to address 1134.

But a change-of-state, such as a voltage jump from zero to a considerable value (address 1131 **PoleOpenVoltage**) or the occurrence of a considerable current (address 1130 **PoleOpenCurrent**), can be a reliable indicator for line energization as such changes can neither occur during normal operation nor in case of a fault. These settings can only be changed via DIGSI at **Display Additional Settings**.

The position of the auxiliary contacts of the circuit breakers directly indicate the position of the circuit breaker. If the circuit breaker is controlled single-pole, energization takes place if at least one contact changes from open to closed.

Note

For the line energization detection with circuit breaker auxiliary contacts, either the phase-selective binary inputs or the input „>CB 3p Closed“ (No. 379) must be used. If the binary input „>CB 3p Open“ (No. 380) is not activated, the status circuit breaker 3-pole closed is not established. This status suppresses the line energization detection.

The detected energization is signalled through the message „Line closure“ (No. 590). The parameter 1132 **SI Time all Cl.** is used to set the signal to a defined length. These settings can only be changed via DIGSI at **Display Additional Settings**. Figure 2-169 shows the logic diagram.

In order to avoid that an energization is detected mistakenly, the state „line open“, which precedes any energization, must apply for a minimum time (settable with the address 1133 **T DELAY. SOTF**). The default setting for this enable delay is 250 ms. This setting can only be changed using DIGSI at **Additional Settings**.

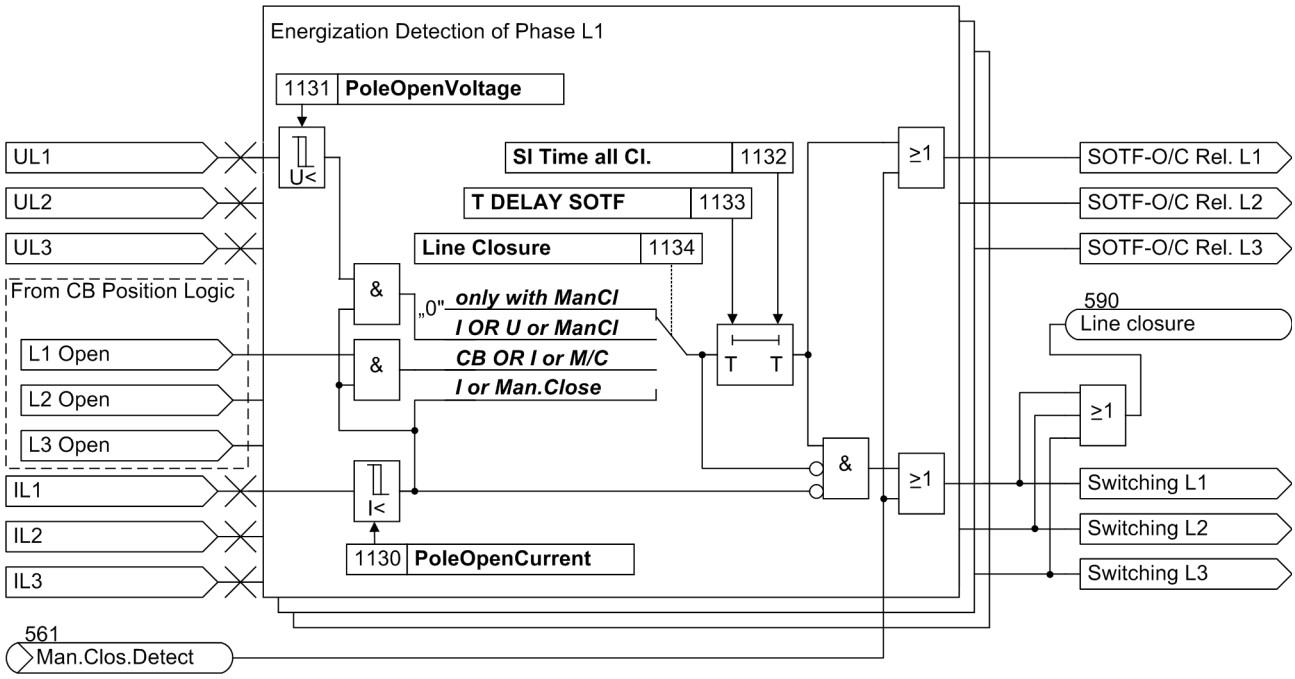

Figure 2-169 Generation of the energization signal

The line energization detection enables the distance protection, earth fault protection, time-overcurrent protection and high-current switch onto fault protection to trip without delay after energization of their line was detected.

Depending on the configuration of the distance protection, an undelayed trip command can be generated after energization for each pickup or for pickup in zone Z1B. The stages of the earth fault protection and of the time overcurrent protection generate an undelayed TRIP command if this was provided for in the configuration. The switch onto fault protection is released phase-selectively and three-pole in case of manual closure after energization detection. In order to generate a trip command as quickly as possible after an energization, the fast switch onto fault protection is released selectively for each phase already when the line is open.

2.20.1.2 Detection of the Circuit Breaker Position

For Protection Purposes

Information regarding the circuit breaker position is required by various protection and supplementary functions to ensure their optimal functionality. This is, for example, of assistance for

- The echo function in conjunction with the distance protection with teleprotection (refer to Section 2.6),
- The echo function in conjunction with directional earth fault comparison scheme (refer to Section 2.8),
- Weak infeed tripping (refer to Section 2.9.2),
- The high-current instantaneous tripping (refer to Section 2.12),
- The circuit breaker failure protection (refer to Section 2.18),
- Verification of the dropout condition for the trip command (see Section „Terminating the Trip Signal“).

The device is equipped with a circuit breaker position logic (Figure 2-170) which offers different options depending on the type of auxiliary contacts provided by the circuit breaker and on how they are connected to the device.

In most cases it is sufficient to report the status of the circuit breaker with its auxiliary contacts to the device via binary input. This always applies if the circuit breaker is only switched 3-pole. Then the NO auxiliary contact of the circuit breaker is connected to a binary input which must be configured to the input function „>CB 3p Closed“ (No. 379). The other inputs are then not used and the logic is restricted in principle to simply forwarding the input information.

If the circuit breaker poles can be switched individually, and only a parallel connection of the NO individual pole auxiliary contacts is available, the relevant binary input (BI) is allocated to the function „>CB 3p Open“ (no. 380). The remaining inputs are not used in this case.

If the circuit breaker poles can be switched individually and if the individual auxiliary contacts are available, an individual binary input should be used for each auxiliary contact if this is possible and if the device can and is to trip 1-pole. With this configuration, the device can process the maximum amount of information. Three binary inputs are used for this purpose:

- „>CB Aux. L1“ (No. 351) for the auxiliary contact of pole L1,
- „>CB Aux. L2“ (No. 352) for the auxiliary contact of pole L2,
- „>CB Aux. L3“ (No. 353) for the auxiliary contact of pole L3.

The inputs No. 379 and No. 380 are not used in this case.

If the circuit breaker can be switched individually, two binary inputs are sufficient if both the parallel as well as series connection of the auxiliary contacts of the three poles are available. In this case, the parallel connection of the auxiliary contacts is routed to the input function „>CB 3p Closed“ (No. 379) and the series connection is routed to the input function „>CB 3p Open“ (No. 380).

Please note that Figure 2-170 shows the complete logic for all connection alternatives. For each particular application, only a portion of the inputs is used as described above.

The eight output signals of the circuit breaker position logic can be processed by the individual protection and supplementary functions. The output signals are blocked if the signals transmitted from the circuit breaker are not plausible: for example, the circuit breaker cannot be open and closed at the same time. Furthermore, no current can flow over an open breaker contact.

The evaluation of the measuring quantities is according to the local conditions of the measuring points (see Section 2.1.4.1 at margin heading „Circuit Breaker Status“).

The phase currents are available as measuring quantities. A flowing current excludes that the circuit breaker is open (exception: A fault between current transformer and circuit breaker). If the circuit breaker is closed, it may, however, still occur that no current is flowing. The decisive setting for the evaluation of the measuring quantities is **PoleOpenCurrent** (address 1130) for the presence of the currents.

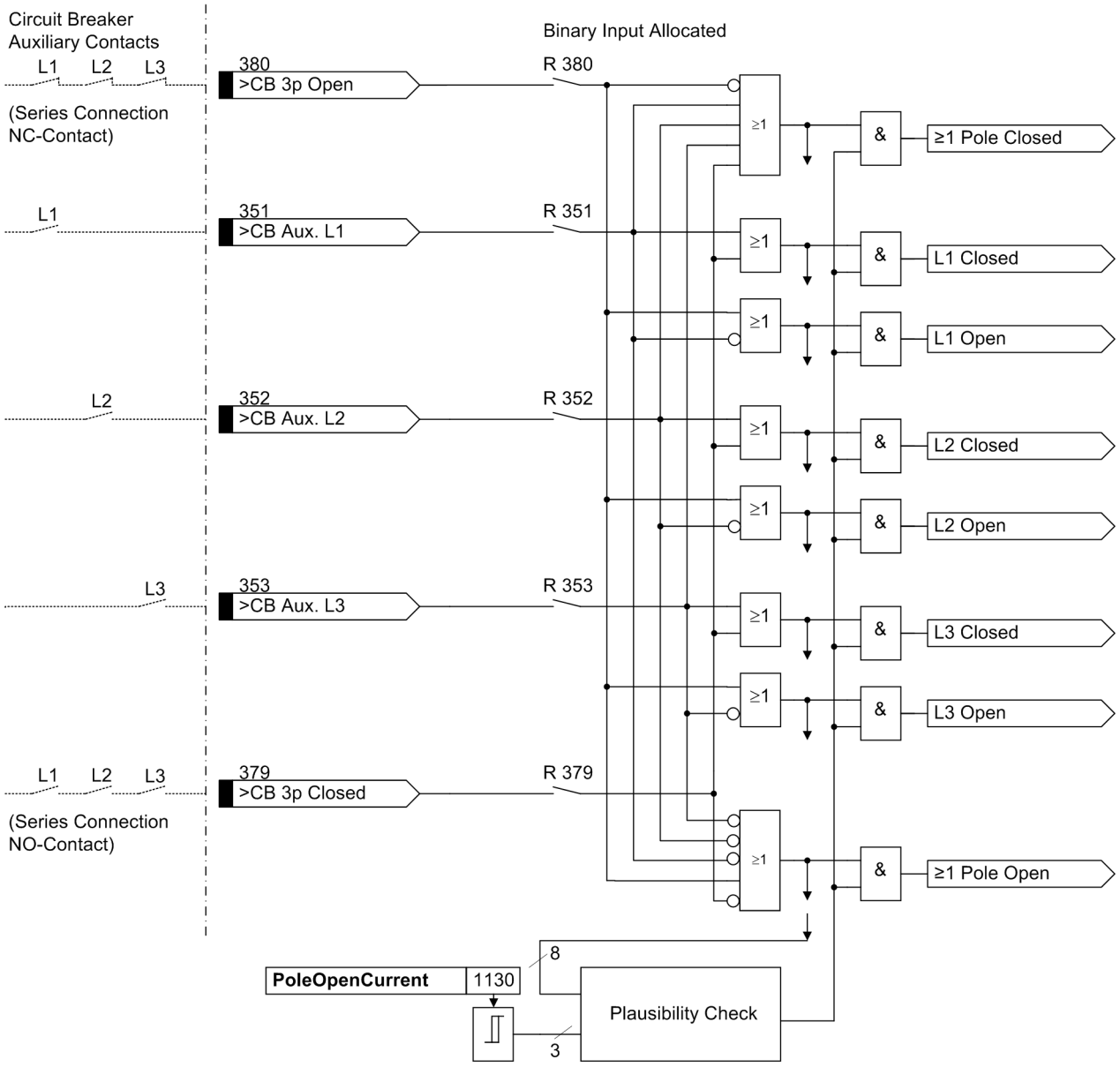

Figure 2-170 Circuit breaker position logic

For automatic reclosure and circuit breaker test

Separate binary inputs comprising information on the position of the circuit breaker are available for the automatic reclosure and the circuit breaker test. This is important for

- The plausibility check before automatic reclosure (refer to Section 2.13),
- The trip circuit check with the help of the TRIP–CLOSE–test cycle (refer to Section 2.20.2).

When using $1^1/_2$ or 2 circuit breakers in each feeder, the automatic reclosure function and the circuit breaker test refer to **one** circuit breaker. The feedback information of this circuit breaker can be connected separately to the device.

For this, separate binary inputs are available, which should be treated the same and configured additionally if necessary. These have a similar significance as the inputs described above for protection applications and are marked with „CB1 ...“ to distinguish them, i.e.:

- „>CB1 3p Closed“ (No. 410) for the series connection of the NO auxiliary contacts of the CB,
- „>CB1 3p Open“ (No. 411) for the series connection of the NC auxiliary contacts of the CB,
- „>CB1 Pole L1“ (No. 366) for the auxiliary contact of pole L1,
- „>CB1 Pole L2“ (No. 367) for the auxiliary contact of pole L2,
- „>CB1 Pole L3“ (No. 368) for the auxiliary contact of pole L3.

2.20.1.3 Open Pole Detector

Single-pole dead times can be detected and reported via the Open Pole Detector. The corresponding protection and monitoring functions can respond. The following figure shows the logic structure of an Open Pole Detector.

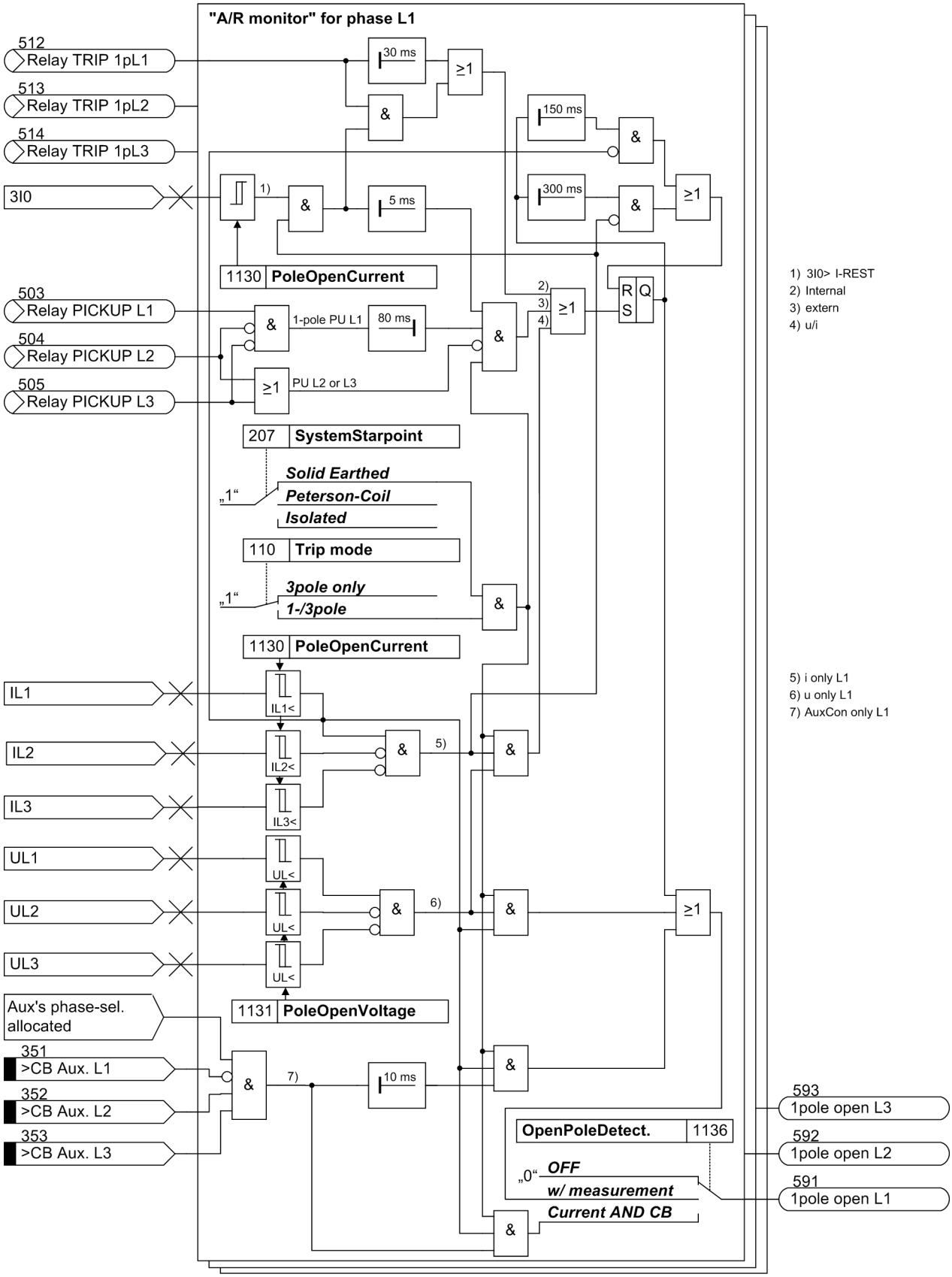

Figure 2-171 Open pole detector logic

1-pole Dead Time

During a 1-pole dead time, the load current flowing in the two healthy phases forces a current flow via earth which may cause undesired pickup. The raising zero-sequence voltage can also produce undesired responses of the functions.

The indications „1pole open L1“ (No. 591), „1pole open L2“ (No. 592) and „1pole open L3“ (No. 593) are additionally generated if the „Open Pole Detector“ detects that current and voltage are absent in one phase – while current flow is detected in both other phases. In this case, one of the indications will only be maintained while the condition is met. This enables a single-pole automatic reclosure to be detected on an unloaded line.

Specially for applications with busbar side voltage transformers the indication „1pole open Lx“ is additionally transmitted if the phase-selective CB auxiliary contacts clearly show a single-pole open circuit breaker, and the current of the affected phase falls below the parameter 1130 **PoleOpenCurrent**.

Depending on the setting of parameter 1136 **OpenPoleDetect.**, the Open Pole Detector evaluates all available measured values including the auxiliary contacts (default setting ***w/ measurement***) or it processes only the information from the auxiliary contacts including the phase current values (setting ***Current AND CB***). To disable the Open Pole Detector, set parameter 1136 to ***OFF***.

2.20.1.4 Pickup Logic for the Entire Device

Phase Segregated Fault Detection

The fault detection logic combines the fault detection (pickup) signals of all protection functions. In the case of those protection functions that allow for phase segregated pickup, the pickup is output in a phase segregated manner. If a protection function detects an earth fault, this is also output as a common device alarm. Thus, the alarms „Relay PICKUP L1“, „Relay PICKUP L2“, „Relay PICKUP L3“ and „Relay PICKUP E“ are available.

The above annunciations can be allocated to LEDs or output relays. For the local display of fault event messages and for the transmission of event messages to a personal computer or a centralized control system, several protection functions provide the possibility to display the faulted phase information in a single message, e.g. „Dis.Pickup L12E“ for the distance protection fault detection in L1-L2-E only one such message appears. It represents the complete definition of the fault detection.

General Pickup

The pickup signals are combined with OR and lead to a general pickup of the device. It is signalled with „Relay PICKUP“. If no function of the device is picked up any longer, „Relay PICKUP“ disappears (indication „OFF“).

General device pickup is a precondition for a series of internal and external functions that occur subsequently. The following are among the internal functions controlled by general device pickup:

- Opening of a trip log: from general device pickup to general device dropout, all fault indications are entered in the trip log.
- Initialization of fault record: the storage and maintenance of fault values can also be made dependent on the occurrence of a trip command.
- Generation of spontaneous indications: Certain fault indications can be displayed as spontaneous indications (see margin heading „Spontaneous Indications“). In addition, this indication can be made dependent on the general device trip.
- Start action time of automatic reclosure (if available and used).

External functions may be controlled by this indication via an output contact. Examples are:

- Automatic reclose devices,
- Channel boost in conjunction with signal transmission by PLC.
- Further additional devices or similar.

Spontaneous Displays

Spontaneous displays are fault messages which appear in the display automatically following a general fault detection or trip command of the device. For the 7SA522, these messages include:

„Relay PICKUP“:	protection function that picked up;
„PU Time“:	the operating time from the general pickup to the dropout of the device, the time is given in ms;
„TRIP Time“:	the operating time from general pickup to the first trip command of the device, in ms;
„dist =“:	the distance to fault in kilometers or miles derived by the distance to fault location function (if possible).

2.20.1.5 Tripping Logic of the Entire Device

Three-pole tripping

In general, the device trips three-pole in the event of a fault. Depending on the version ordered (see Section A.1, „Ordering Information“), single-pole tripping is also possible. If, in general, single-pole tripping is not possible or desired, the output function „Relay TRIP“ is used for the trip command output to the circuit breaker. In these cases, the following sections regarding single-pole tripping are not of interest.

Single-pole tripping

Single-pole tripping only makes sense on overhead lines on which automatic reclosure is to be carried out and where the circuit breakers at both ends of the line are capable of single-pole tripping. Single-pole tripping of the faulted phase with subsequent reclosure is then possible for single phase faults; three-pole tripping is generally performed in case of two-phase or three-phase faults with and without earth.

Device prerequisites for phase segregated tripping are:

- Phase segregated tripping is provided by the device (according to the ordering code);
- The tripping function is suitable for pole-segregated tripping (for example, not for frequency protection, overvoltage protection or overload protection),
- The binary input „>1p Trip Perm“ is configured and activated or the internal automatic reclosure function is ready for reclosure after single-pole tripping.

In all other cases tripping is always three-pole. The binary input „>1p Trip Perm“ is the logic inversion of a three-pole coupling and activated by an external auto-reclosure device as long as this is ready for a single-pole auto-reclosure cycle.

With the 7SA522, it is also possible to trip three-pole when only one phase is subjected to the trip conditions, but more than one phase indicates a fault detection. With distance protection this is the case when two faults at different locations occur simultaneously but only one of them is within the range of the fast tripping zone (Z1 or Z1B). This is selected with the setting parameter **3pole coupling** (address 1155), which can be set to ***with PICKUP*** (every multiple-phase fault detection causes three-pole trip) or ***with TRIP*** (in the event of multiple-phase fault in the tripping area, the tripping is always three-pole).

The tripping logic combines the trip signals from all protection functions. The trip commands of those functions that allow single-pole tripping are phase segregated. The corresponding indications are named „Relay TRIP L1“, „Relay TRIP L2“ and „Relay TRIP L3“.

These indications can be allocated to LEDs or output relays. In the event of three-pole tripping all three indications are displayed. These alarms are also intended for the trip command output to the circuit breaker.

If single-pole tripping is possible, the protection functions generate a group signal for the local display of fault indications and for the transmission of the indications to a PC or a central control system, e.g. „Dis.Trip 1pL1“, „Dis.Trip 1pL2“, „Dis.Trip 1pL3“ for single-pole tripping by the distance protection and „Dis.Trip 3p“ for three-pole tripping; only one of these messages is displayed at a time.

Single-pole tripping for two-phase faults

Single-pole tripping for two-phase faults is a special feature. If a phase-to-phase fault without earth occurs in an earthed system, this fault can be cleared by single-pole trip and automatic reclosure in one of the faulted phases as the short-circuit path is interrupted in this manner. The phase selected for tripping must be the same at both line ends (and should be the same for the entire system).

The setting parameter **Trip2phFlt** (address 1156) allows to select whether this tripping is to be ***1pole leading Ø***, i.e. single-pole tripping in the leading phase or ***1pole lagging Ø***, i.e. single-pole tripping in the lagging phase. Standard setting is ***3pole*** tripping in the event of two-phase faults (default setting).

Table 2-11 Single-pole and three-pole trip depending on fault type

Type of Fault (from Protection Function)				Parameter Trip2phFlt	Output signals for trip			
					TRIP 1p.L1	TRIP 1p.L2	TRIP 1p.L3	Relay TRIP 3ph.
L1				(any)	X			
	L2			(any)		X		
		L3		(any)			X	
L1			E	(any)	X			
	L2		E	(any)		X		
		L3	E	(any)			X	
L1	L2			3pole				X
L1	L2			1pole leading Ø	X			
L1	L2			1pole lagging Ø		X		
	L2	L3		3pole				X
	L2	L3		1pole leading Ø		X		
	L2	L3		1pole lagging Ø			X	
L1		L3		3pole				X
L1		L3		1pole leading Ø			X	
L1		L3		1pole lagging Ø	X			
L1	L2		E	(any)				X
	L2	L3	E	(any)				X
L1		L3	E	(any)				X
L1	L2	L3		(any)				X
L1	L2	L3	E	(any)				X
			E	(any)				X

General Trip

All trip signals for the functions are connected by OR and generate the message „Relay TRIP“. This can be allocated to LED or output relay.

Terminating the Trip Signal

Once a trip command is initiated, it is phase segregatedly latched (in the event of three-pole tripping for each of the three poles) (refer to Figure 2-172). At the same time, the minimum trip command duration **TMin TRIP CMD** (address 240) is started. This ensures that the trip command is output to the circuit breaker for a sufficiently long time even if the tripping protection function resets very rapidly. The trip commands can only be reset after all tripping protection functions have dropped out and after the minimum trip command duration has elapsed.

A further condition for the reset of the trip command is that the circuit breaker has opened, in the event of single-pole tripping the relevant circuit breaker pole. In the function control of the device, this is checked by means of the circuit breaker position feedback (Section „Detection of the Circuit Breaker Position“) and the flow of current. In address 1130 **PoleOpenCurrent**, the residual current threshold which may definitely not be exceeded when the circuit breaker pole is open, is set. Address 1135 **Reset Trip CMD** determines under which conditions a trip command is reset. If ***CurrentOpenPole*** is set, the trip command is reset as soon as the current disappears. It is important that the value set in address 1130 **PoleOpenCurrent** (see above) is undershot. If ***Current AND CB*** is set, the circuit breaker auxiliary contact must send a message that the circuit breaker is open. It is a prerequisite for this setting that the position of the auxiliary contact is allocated via a binary input. If this additional condition is not required for resetting the trip command (e.g. if test sockets are used for protection testing), it can be switched off with the setting ***Pickup Reset***.

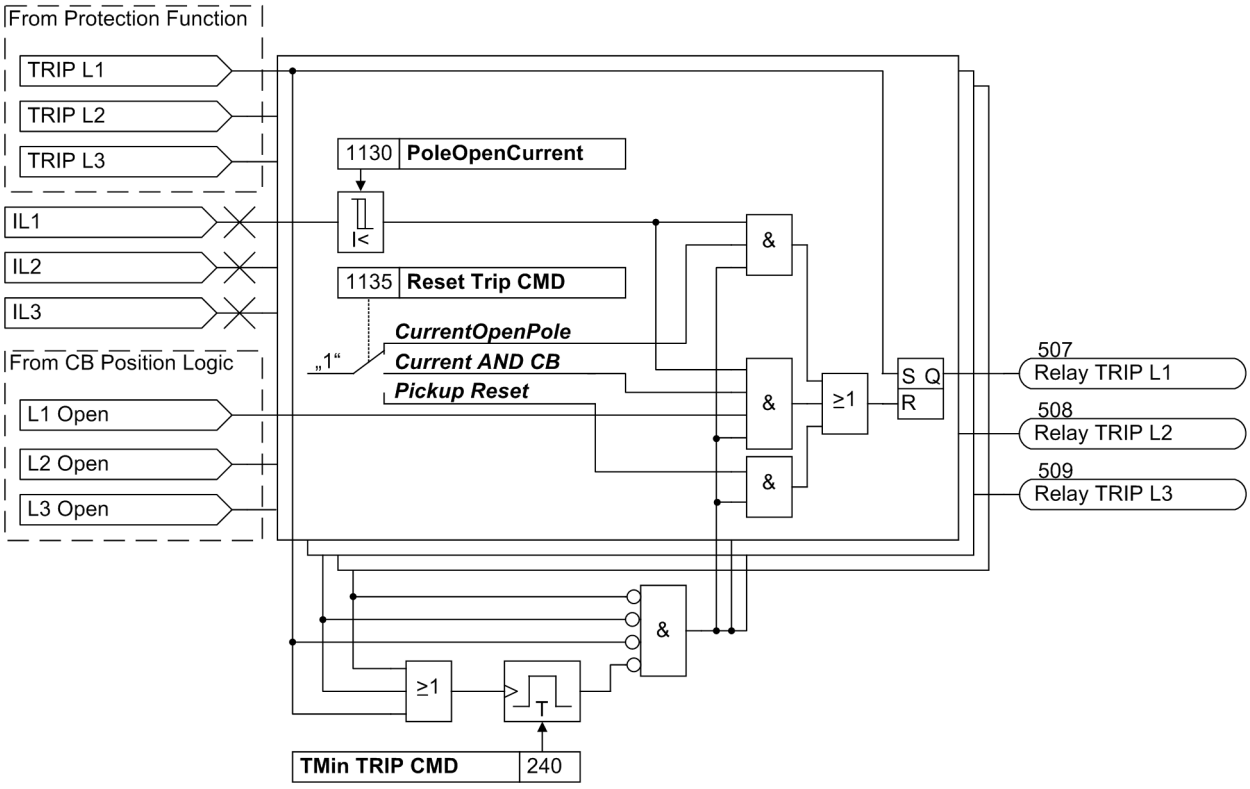

Figure 2-172 Storage and termination of the trip command

Reclosure Interlocking

When a protection function has tripped the circuit breaker, it is often desired to prevent reclosing until the tripping cause has been found. 7SA522 enables this via the integrated reclosure interlocking.

The interlocking state („LOCKOUT“) will be realized by an RS flipflop which is protected against auxiliary voltage failure (see Figure 2-173). The RS flipflop is set via binary input „>Lockout SET“ (no. 385). With the output alarm „LOCKOUT“ (no. 530), if interconnected correspondingly, a reclosure of the circuit breaker (e.g. for automatic reclosure, manual close signal, synchronization, closing via control) can be blocked. Only once the cause for the protection operation is known, should the interlocking be reset by a manual reset via binary input „>Lockout RESET“ (no. 386).

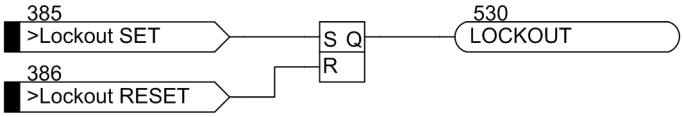

Figure 2-173 Reclosure Interlocking

Conditions which cause reclosure interlocking and control commands which have to be interlocked can be set individually. The two inputs and the output can be wired via the correspondingly allocated binary inputs and outputs or be linked via user-defined logic functions (CFC).

If, for example, each trip by the protection function has to cause a closing lock-out, then combine the tripping command „Relay TRIP“ (No. 511) with the binary input „>Lockout SET“. If automatic reclosure is used, only the final trip of the protection function should activate reclosing lock-out. Please bear in mind that the message „Definitive TRIP“ (no. 536) applies only for 500 ms. Then combine the output alarm „Definitive TRIP“ (No. 536) with the interlocking input „>Lockout SET“ so that the interlocking is not activated when an automatic reclosure is still expected.

In the simplest case, you can route the output alarm „LOCKOUT“ (No. 530) to the same output that trips the cirbuit breaker without creating additional links. Then the tripping command is maintained until the interlock is reset via the reset input. This requires the close coil at the circuit breaker to be blocked as usual for as long as a tripping command is maintained.

The output indication „LOCKOUT“ can also be applied to interlock certain closing commands (externally or via CFC), e.g. by combining the output alarm with the binary input „>Blk Man. Close“ (no. 357) or by connecting the inverted alarm with the bay interlocking of the feeder.

The reset input „>Lockout RESET“ (no. 386) resets the interlocking state. This input is initiated by an external device which is protected against unauthorized or unintentional operation. The interlocking state can also be controlled by internal sources using CFC, e.g. a function key, operation of the device or using DIGSI on a PC.

For each case please ensure that the corresponding logic operations, security measures, etc. are taken into account when routing the binary inputs and outputs and may have to be considered when creating the user-defined logic functions. See also the SIPROTEC 4 System Description.

Breaker Tripping Alarm Suppression

On feeders without automatic reclosure, every trip command by a protection function is final. But when using automatic reclosure, it is desired that the operation detector of the circuit breaker (fleeting contact at the breaker) should only generate an alarm if the trip of the breaker is final (Figure 2-174).

To accomplish this, the signal from the circuit breaker can be routed via an output contact of the 7SA522 (output alarm „CB Alarm Supp“, No. 563) that is configured accordingly. In the idle state and when the device is turned off, this contact is closed. This requires that a normally closed contact is allocated. Which contact is to be allocated depends on the device version. See also the general views in the Appendix.

Prior to a trip command with the internal automatic reclosure in the ready state, the contact opens so that the tripping of the circuit breaker is not passed on. This is only the case if the device is equipped with internal automatic reclosure and if the latter was taken into consideration when configuring the protection functions (address 133).

Also when closing the breaker via the binary input „>Manual Close“ (No 356) or via the integrated automatic reclosure the contact is interrupted so that the breaker alarm is inhibited.

Further optional closing commands which are not sent via the device are not taken into consideration. Closing commands for control can be linked to the alarm suppression via the user-defined logic functions (CFC).

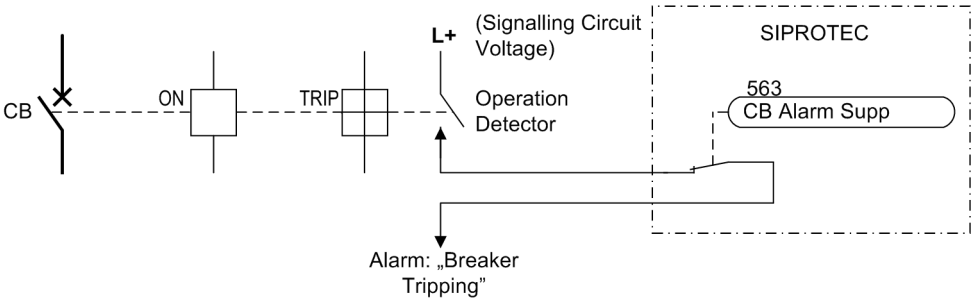

Figure 2-174 Breaker tripping alarm suppression

If the device issues a final trip command, the contact remains closed. This is the case, during the reclaim time of the automatic reclosure cycle, when the automatic reclosure is blocked or switched off or, due to other reasons is not ready for automatic reclosure (e.g. tripping only occurred after the action time expired).

Figure 2-175 shows time diagrams for manual trip and close as well as for short-circuit tripping with a single, failed automatic reclosure cycle.

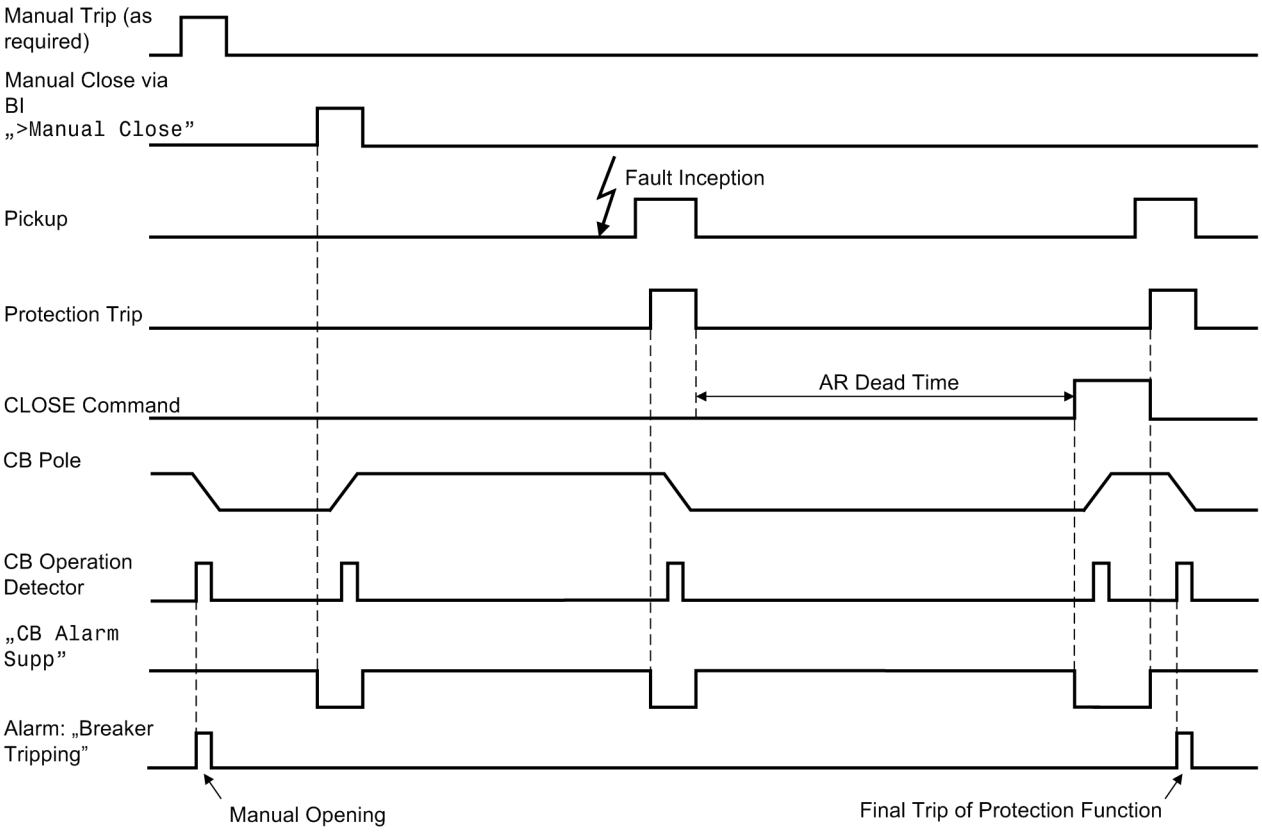

Figure 2-175 Breaker tripping alarm suppression — sequence examples

2.20.2 Circuit breaker trip test

The 7SA522 distance protection relay allows for convenient testing of the trip circuits and the circuit breakers.

2.20.2.1 Functional Description

The test programs shown in Table 2-12 are available. The single-pole tests are of course only possible if the device you are using is capable of single-pole tripping.

The output alarms mentioned must be allocated to the relevant command relays that are used for controlling the circuit breaker coils.

The test is started using the operator panel on the front of the device or using the PC with DIGSI. The procedure is described in detail in the SIPROTEC 4 System Description. Figure 2-176 shows the chronological sequence of one TRIP–CLOSE test cycle. The set times are those stated in Section 2.1.2.1 for „Trip Command Duration“ and „Circuit Breaker Test“.

Where the circuit breaker auxiliary contacts indicate the status of the circuit breaker or of its poles to the device via binary inputs, the test cycle can only be initiated if the circuit breaker is closed.

The information regarding the position of the circuit breakers is not automatically derived from the position logic according to the above section. For the circuit breaker test function (auto recloser) there are separate binary inputs for the switching status feedback of the circuit breaker position. These must be taken into consideration when allocating the binary inputs as mentioned in the previous section.

The alarms of the device show the respective state of the test sequence.

Table 2-12 Circuit breaker test programs

Serial No.	Test Programs	Circuit Breaker	Output Indications (No.)
1	1-pole TRIP/CLOSE-cycle phase L1	CB 1	CB1-TESTtrip L1 (7325)
2	1-pole TRIP/CLOSE-cycle phase L2		CB1-TESTtrip L2 (7326)
3	1-pole TRIP/CLOSE-cycle phase L3		CB1-TESTtrip L3 (7327)
4	3-pole TRIP/CLOSE-cycle		CB1-TESTtrip 123 (7328)
	Associated close command		CB1-TEST CLOSE (7329)

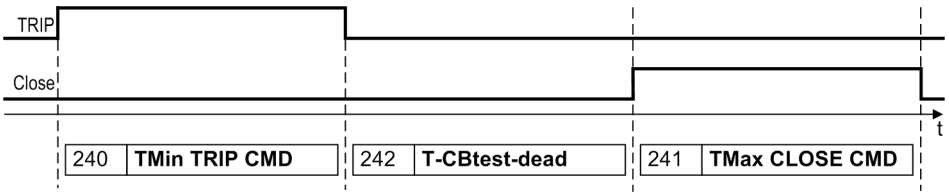

Figure 2-176 TRIP-CLOSE test cycle

2.20.2.2 Setting Notes

The timer setting values are according to Subsection 2.1.2.1 for „command duration“ and „circuit breaker test“.

2.20.2.3 Information List

No.	Information	Type of Information	Comments
-	CB1tst L1	-	CB1-TEST trip/close - Only L1
-	CB1tst L2	-	CB1-TEST trip/close - Only L2
-	CB1tst L3	-	CB1-TEST trip/close - Only L3
-	CB1tst 123	-	CB1-TEST trip/close Phases L123
7325	CB1-TESTtrip L1	OUT	CB1-TEST TRIP command - Only L1
7326	CB1-TESTtrip L2	OUT	CB1-TEST TRIP command - Only L2
7327	CB1-TESTtrip L3	OUT	CB1-TEST TRIP command - Only L3
7328	CB1-TESTtrip123	OUT	CB1-TEST TRIP command L123
7329	CB1-TEST close	OUT	CB1-TEST CLOSE command
7345	CB-TEST running	OUT	CB-TEST is in progress
7346	CB-TSTstop FLT.	OUT_Ev	CB-TEST canceled due to Power Sys. Fault
7347	CB-TSTstop OPEN	OUT_Ev	CB-TEST canceled due to CB already OPEN
7348	CB-TSTstop NOTr	OUT_Ev	CB-TEST canceled due to CB was NOT READY
7349	CB-TSTstop CLOS	OUT_Ev	CB-TEST canceled due to CB stayed CLOSED
7350	CB-TST .OK.	OUT_Ev	CB-TEST was successful

2.20.3 Device

The device requires some general information. This may be, for example, the type of indication to be issued in the event a power system fault occurs.

2.20.3.1 Trip-Dependent Indications

Spontaneous Fault Messeges

After a fault, the essential fault data spontaneously appear on the device display. Under address 610 **FltDisp.LED/LCD** you can select whether the spontaneous fault indications are updated in every case of fault (***Target on PU***) or only in faults with tripping (***Target on TRIP***).

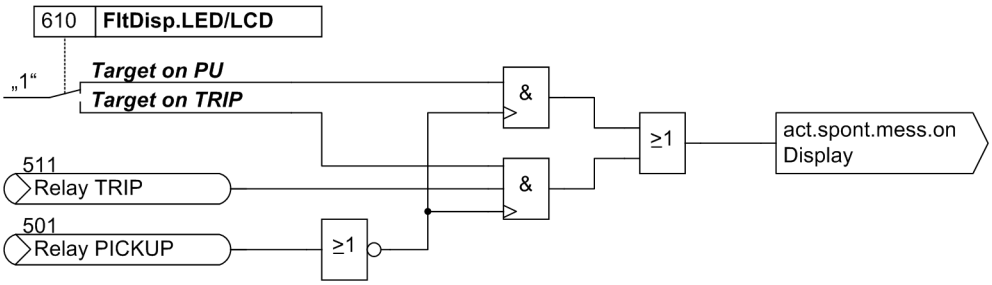

Figure 2-177 Generation of spontaneous fault indications on the display

Reset of Stored LED / Relays

Pickup of a new protection function generally deletes all stored LED / relays so that only the information of the latest fault is displayed at a time. The deletion of the stored LED and relays can be inhibited for a settable time under address 625 **T MIN LED HOLD**. Any information occurring during this time are then combined with a logical OR function.

Under address 610 **FltDisp.LED/LCD**, also the information of the latest fault stored on LED and relays can be deleted with the setting (***Target on TRIP***) unless this fault has lead to a trip command of the device.

Note

Setting the address 610 **FltDisp.LED/LCD** to (***Target on TRIP***) only makes sense if address 625 **T MIN LED HOLD** is set to 0.

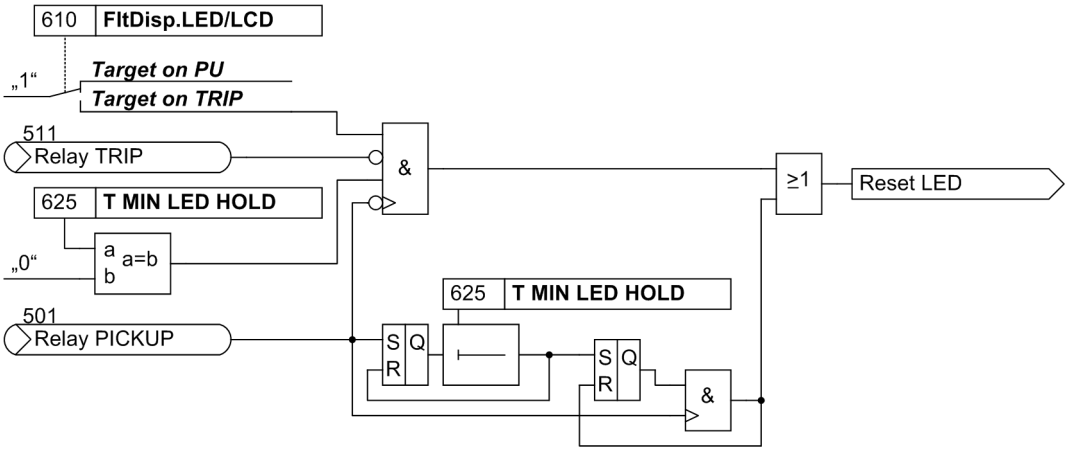

Figure 2-178 Creation of the reset command for saved LED / relays

2.20.3.2 Switching Statistics

The number of trips initiated by the device 7SA522 are counted. If the device is capable of single-pole tripping, a separate counter for each circuit breaker pole is provided.

Furthermore, for each trip command the interrupted current for each pole is measured, output in the trip log and accumulated in a memory. The maximum interrupted current is also stored.

If the device is equipped with the integrated automatic reclosing function, the automatic close commands are also counted, separately for reclosure after single-pole tripping, after three-pole tripping and separately for the first and further reclosure cycles.

The counter and memory content are secured against loss of auxiliary voltage. They can be set to zero or to any other initial value. For more details, please refer to the SIPROTEC 4 System Description.

2.20.3.3 Setting Notes

Fault Indications

Pickup of a new protection function generally turns off any previously set displays, so that only the latest fault is displayed at any one time. It can be selected whether the stored LED displays and the spontaneous indications on the display appear upon renewed pickup, or only after a renewed trip signal is issued. In order to enter the desired type of display, select the submenu General Device Settings in the SETTINGS menu. At address 610 **FltDisp.LED/LCD** the two alternatives ***Target on PU*** and ***Target on TRIP*** („No trip - no flag“) are offered.

After startup of the device featuring a 4-line display, default measured values are displayed. Use the arrow keys on the device front to select different measured value views to be used as the so-called default display. The start page of the default display, which will open after each startup of the device, can be selected via parameter 640 **Start image DD**. The available representation types for the measured value are listed in the Appendix.

2.20.3.4 Settings

Addresses which have an appended "A" can only be changed with DIGSI, under Additional Settings.

Addr.	Parameter	Setting Options	Default Setting	Comments
610	FltDisp.LED/LCD	Target on PU Target on TRIP	Target on PU	Fault Display on LED / LCD
625A	T MIN LED HOLD	0 .. 60 min; ∞	0 min	Minimum hold time of lachted LEDs
640	Start image DD	image 1 image 2 image 3 image 4 image 5	image 1	Start image Default Display

2.20.3.5 Information List

No.	Information	Type of Information	Comments
-	Test mode	IntSP	Test mode
-	DataStop	IntSP	Stop data transmission
-	Reset LED	IntSP	Reset LED
-	SynchClock	IntSP_Ev	Clock Synchronization
-	>Light on	SP	>Back Light on
-	HWTestMod	IntSP	Hardware Test Mode
-	Error FMS1	OUT	Error FMS FO 1
-	Error FMS2	OUT	Error FMS FO 2
-	Distur.CFC	OUT	Disturbance CFC
-	Brk OPENED	IntSP	Breaker OPENED
-	FdrEARTHED	IntSP	Feeder EARTHED
1	Not configured	SP	No Function configured
2	Non Existent	SP	Function Not Available
3	>Time Synch	SP	>Synchronize Internal Real Time Clock
5	>Reset LED	SP	>Reset LED
11	>Annunc. 1	SP	>User defined annunciation 1
12	>Annunc. 2	SP	>User defined annunciation 2
13	>Annunc. 3	SP	>User defined annunciation 3
14	>Annunc. 4	SP	>User defined annunciation 4
15	>Test mode	SP	>Test mode
16	>DataStop	SP	>Stop data transmission
51	Device OK	OUT	Device is Operational and Protecting
52	ProtActive	IntSP	At Least 1 Protection Funct. is Active
55	Reset Device	OUT	Reset Device
56	Initial Start	OUT	Initial Start of Device
67	Resume	OUT	Resume
68	Clock SyncError	OUT	Clock Synchronization Error
69	DayLightSavTime	OUT	Daylight Saving Time
70	Settings Calc.	OUT	Setting calculation is running

No.	Information	Type of Information	Comments
71	Settings Check	OUT	Settings Check
72	Level-2 change	OUT	Level-2 change
73	Local change	OUT	Local setting change
110	Event Lost	OUT_Ev	Event lost
113	Flag Lost	OUT	Flag Lost
125	Chatter ON	OUT	Chatter ON
126	ProtON/OFF	IntSP	Protection ON/OFF (via system port)
127	AR ON/OFF	IntSP	Auto Reclose ON/OFF (via system port)
128	TelepONoff	IntSP	Teleprot. ON/OFF (via system port)
140	Error Sum Alarm	OUT	Error with a summary alarm
144	Error 5V	OUT	Error 5V
160	Alarm Sum Event	OUT	Alarm Summary Event
177	Fail Battery	OUT	Failure: Battery empty
181	Error A/D-conv.	OUT	Error: A/D converter
183	Error Board 1	OUT	Error Board 1
184	Error Board 2	OUT	Error Board 2
185	Error Board 3	OUT	Error Board 3
186	Error Board 4	OUT	Error Board 4
187	Error Board 5	OUT	Error Board 5
188	Error Board 6	OUT	Error Board 6
189	Error Board 7	OUT	Error Board 7
190	Error Board 0	OUT	Error Board 0
191	Error Offset	OUT	Error: Offset
192	Error1A/5Awrong	OUT	Error:1A/5Ajumper different from setting
193	Alarm adjustm.	OUT	Alarm: Analog input adjustment invalid
194	Error neutralCT	OUT	Error: Neutral CT different from MLFB
320	Warn Mem. Data	OUT	Warn: Limit of Memory Data exceeded
321	Warn Mem. Para.	OUT	Warn: Limit of Memory Parameter exceeded
322	Warn Mem. Oper.	OUT	Warn: Limit of Memory Operation exceeded
323	Warn Mem. New	OUT	Warn: Limit of Memory New exceeded
4051	Telep. ON	IntSP	Teleprotection is switched ON

2.20.4 Ethernet EN100-Module

2.20.4.1 Functional Description

An `Ethernet EN100-Module` allows to integrate the 7SA522 into 100 Mbit Ethernet communication networks used by process control and automation systems and running IEC 61850 protocols. This standard provides consistent inter-relay communication without gateways or protocol converters. This allows open and interoperable use of SIPROTEC 4 devices even in heterogeneous environments. In parallel to the process control integration of the device, this interface can also be used for communication with DIGSI and for inter-relay communication via GOOSE.

2.20.4.2 Setting Notes

Interface Selection

No settings are required for operation of the Ethernet system interface module (IEC 61850 **`Ethernet EN100-Module`**). If the device is equipped with such a module (see MLFB), the module is automatically configured to the interface available for it, namely ***`Port B`***.

2.20.4.3 Information List

No.	Information	Type of Information	Comments
009.0100	Failure Modul	IntSP	Failure EN100 Modul
009.0101	Fail Ch1	IntSP	Failure EN100 Link Channel 1 (Ch1)
009.0102	Fail Ch2	IntSP	Failure EN100 Link Channel 2 (Ch2)

2.21 Auxiliary Functions

The additional functions of the 7SA522 distance protection relay include:

- commissioning tool,
- processing of messages,
- processing of operational measured values,
- storage of fault record data.

2.21.1 Commissioning Aids

2.21.1.1 Functional Description

The device is provided with a comprehensive commissioning and monitoring tool that checks the entire distance protection system: The WEB-Monitor. The documentation for this tool is available on CD-ROM with DIGSI, and on the Internet at www.siprotec.com.

To ensure proper communication between the device and the PC browser, several prerequisites must be met. The transmission speed must be the same and an IP address has to be assigned so that the browser can identify the device.

Thanks to the WEB Monitor, the user is able to operate the device from a PC. On the PC screen, the front panel of the device with its operator keyboard is emulated. The actual operation of the device can be simulated using the mouse pointer. This feature can be disabled.

If the device is equipped with an EN100 module, operation by DIGSI or the WEB Monitor is possible via Ethernet. This is done by simply setting the IP configuration of the device accordingly. Parallel operation of DIGSI and WEB Monitor via different interfaces is possible.

WEB-Monitor

The WEB Monitor provides quick and easy access to the most important data in the device. Using a personal computer with a web browser, the WEB Monitor offers a detailed illustration of the most important measured values and of the distance protection data required for directional checks.

The measured values list can be selected from the navigation toolbar separately for the local device and (in devices with protection data interface) the remote device. In each case a list with the desired information is displayed (see Figures 2-179 and 2-180).

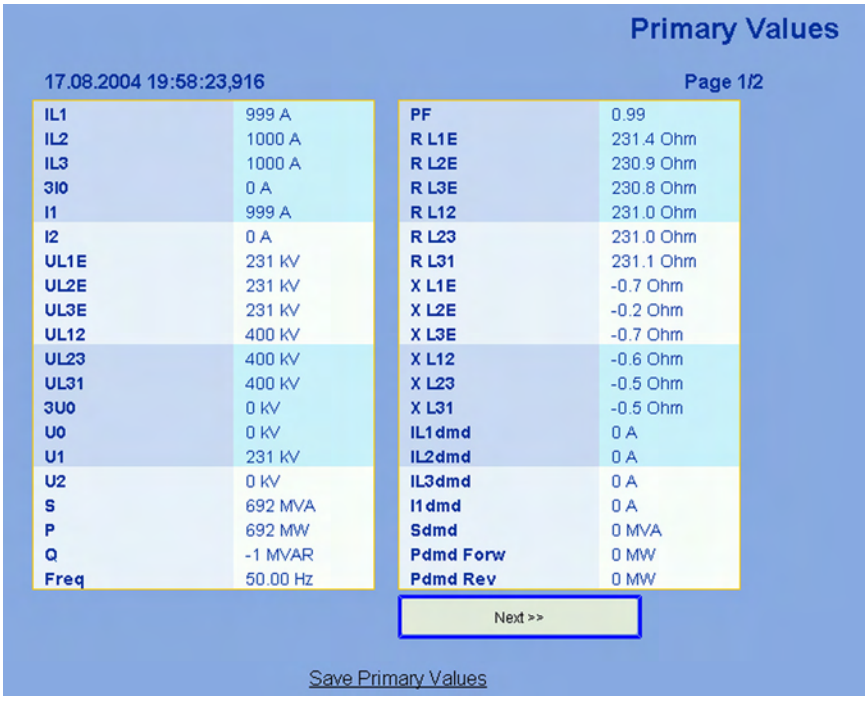

Figure 2-179 Local measured values in the Web-Monitor — examples for measured values

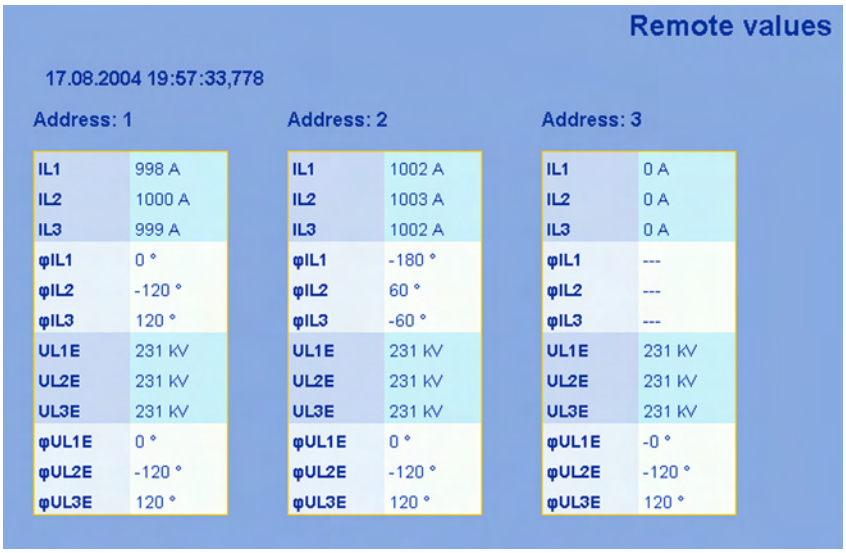

Figure 2-180 Measured values of the remote device — Example

The currents, voltages and their phase angles derived from the primary, secondary and remote measured values are graphically displayed as phasor diagrams. Figure 2-181 shows this view for one device, and Figure 2-182 for two devices. In addition to phasor diagrams of the measured values, the numerical values as well as frequency and device addresses are indicated. For details please refer to the documentation provided for the WEB-Monitor.

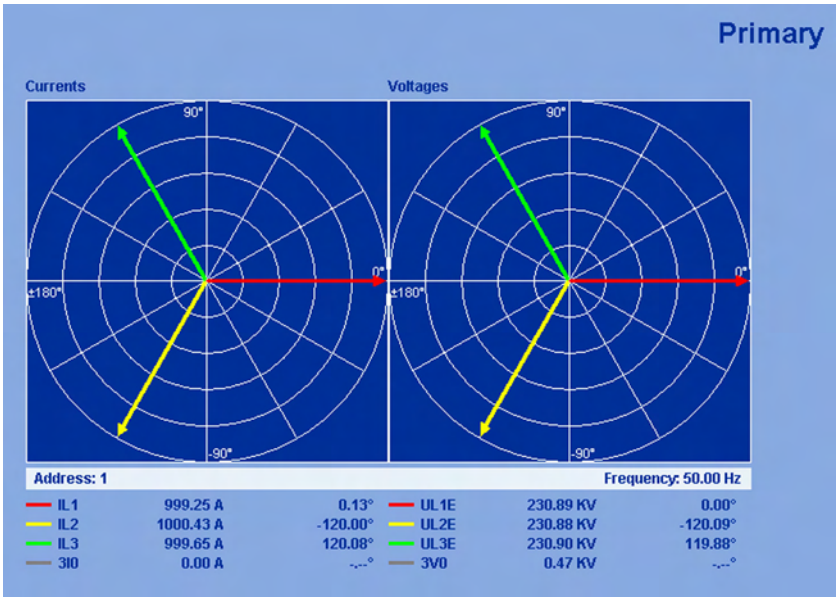

Figure 2-181 Phasor diagram of the primary measured values — Example

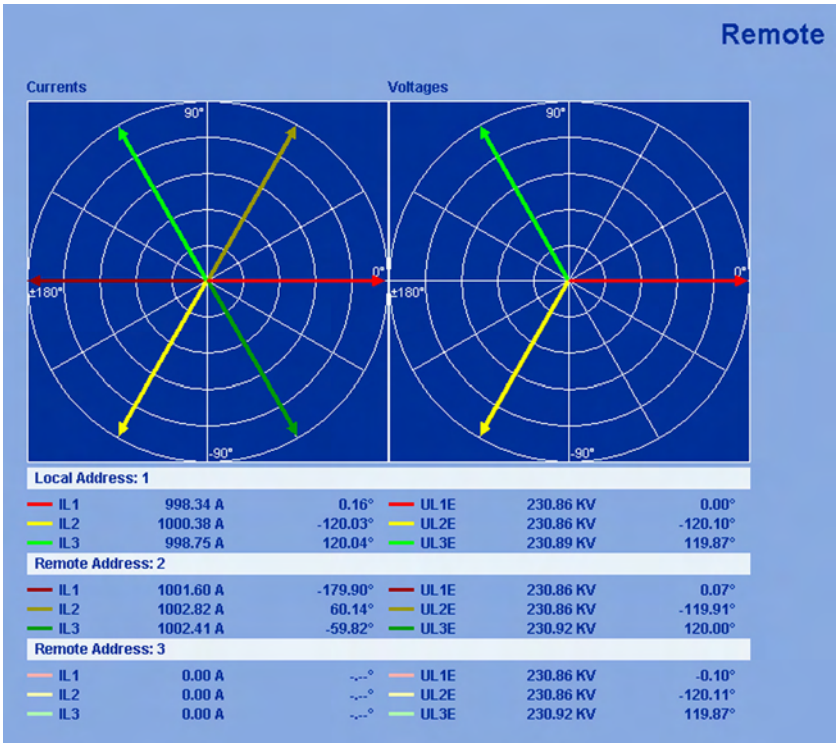

Figure 2-182 Phasor diagram of the remote measured values — Example

The following types of indications can be retrieved and displayed with the Web-Monitor

- Event Log (operational indications),
- Trip Log (fault indications),
- Spontaneous indications

You can print these lists with the „Print event buffer“ button.

The illustration below (Figure 2-183) shows how the displayed measured values are allocated to the devices of the distance protection system. The active power direction of each device is shown by an arrow. The active power is calculated on the basis of voltages and currents that exceed the values set for **PoleOpenVoltage** (address 1131) or **PoleOpenCurrent** (address 1130). The direction of the arrow, and its colour, show you whether the active power flows into the line or whether the current transformer is misconnected. This allows to check the correct connection of the current transformers at each line end. If there are several ends, you can check the theoretically determined directions. This directional check is used to verify that the protection operates in the correct direction. It is not related with parameter 1107 **P,Q sign**.

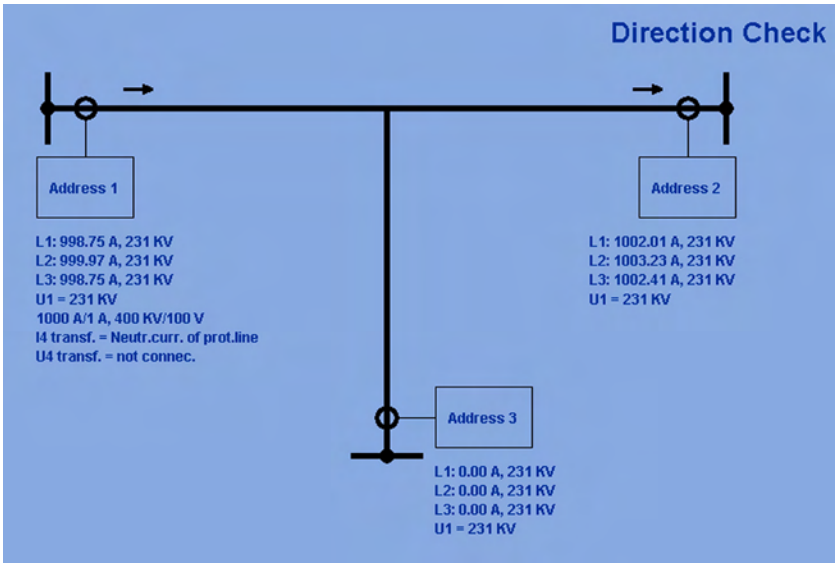

Figure 2-183 Directional check for three devices — Example

2.21.1.2 Setting Notes

The parameters of the WEB-Monitor can be set separately for the front operator interface and the service interface. The relevant IP address of the interface is the one that is used for communication with the PC and the WEB-Monitor.

Make sure that the 12-digit IP address valid for the browser is set correctly via DIGSI in the format ***.***.***.***.

2.21.2 Processing of Messages

After the occurrence of a system fault, data regarding the response of the protection relay and the measured quantities should be saved for future analysis. For this reason message processing is done in three ways:

2.21.2.1 Method of Operation

Indicators and Binary Outputs (Output Relays)

Important events and states are displayed by LEDs on the front cover. The device also contains output relays for remote signaling. Most indications and displays can be configured differently from the delivery default settings (for information on the delivery default setting see Appendix). The SIPROTEC 4 System Description gives a detailed description of the configuration procedure.

The output relays and the LEDs may be operated in a latched or unlatched mode (each may be individually set).

The latched conditions are protected against loss of the auxiliary voltage. They are reset

- On site by pressing the LED key on the relay,
- Remotely using a binary input configured for that purpose,
- Using one of the serial interfaces,
- Automatically at the beginning of a new pickup.

Status messages should not be latched. Also, they cannot be reset until the criterion to be reported is remedied. This applies to, e.g., indications from monitoring functions, or the like.

A green LED displays operational readiness of the relay („RUN“); it cannot be reset. It extinguishes if the self-check feature of the microprocessor detects an abnormal occurrence, or if the auxiliary voltage fails.

When auxiliary voltage is present but the relay has an internal malfunction, the red LED („ERROR“) lights up and the processor blocks the relay.

DIGSI enables you to selectively control each output relay and LED of the device and, in doing so, check the correct connection to the system. In a dialog box, you can, for instance, cause each output relay to pick up, and thus test the wiring between the 7SA522 and the system without having to create the indications masked to it.

Information on the Integrated Display (LCD) or to a Personal Computer

Events and conditions can be read out on the display on the front panel of the relay. Using the front operator interface or the rear service interface, for instance, a personal computer can be connected, to which the information can be sent.

In the quiescent state, i.e. as long as no system fault is present, the LCD can display selectable operational information (overview of the operational measured values) (default display). In the event of a system fault, information regarding the fault, the so-called spontaneous displays, are displayed instead. After the fault indications have been acknowledged, the quiescent data are shown again. Acknowledgement is accomplished by pressing the LED buttons on the front panel (see above).

Figure 2-184 shows the default display in a 4-line display as preset.

Various default displays can be selected via the arrow keys. Parameter 640 can be set to change the default setting for the default display page shown in idle state. Two examples of possible default display selections are given below.

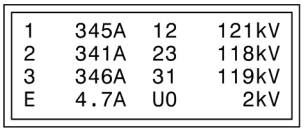

Example:

IL1	= 345 A	UL1-L2	= 121 kV
IL2	= 341 A	UL2-L3	= 118 kV
IL3	= 346 A	UL3-L1	= 119 kV
IE (3I0)	= 4.7 A	U0	= 2 kV

Figure 2-184 Operational measured values in the default display

Default display 3 shows the measured power values and the measured values U_{L1-L2} and I_{L2}.

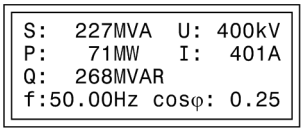

Example:

S	= 227 MVA	UL1-L2	= 400 kV
P	= 71 MW	IL2	= 401 A
Q	= 268 MVAR		
f	= 50.00 Hz	cos φ	= 0.25

Figure 2-185 Operational measured values in the default display

Moreover, the device has several event buffers for operational indications, fault indications, switching statistics, etc., which are protected against loss of auxiliary supply by means of a backup battery. These indications can be displayed on the LCD at any time by selection using the keypad or transferred to a personal computer via the serial service or operator interface. Reading out indications during operation is described in detail in the SIPROTEC 4 System Description.

After a system fault, for example, important information about the progression of the fault can be retrieved, such as the pickup of a protection stage or the initiation of a trip signal. The system clock accurately provides the absolute time when the fault first occurred. The fault progression is output with a relative time referred to the instant of pickup so that the time until tripping and until reset of the trip command can be recognized. The resolution of the time information is 1 ms.

With a PC and the DIGSI protection data processing software, it is also possible to retrieve and display the events with the convenience of visualisation on a monitor and a menu-guided dialog. The data can either be printed out or stored elsewhere for later evaluation.

The protection device stores the messages of the last eight system faults; in the event of a ninth fault, the oldest is erased.

A system fault starts with the detection of the fault by the fault detection of any protection function and ends with the reset of the fault detection of the last protection function or after the expiry of the auto-reclose reclaim time, so that several unsuccessful reclose cycles are also stored cohesively. Accordingly a system fault may contain several individual fault events (from fault detection up to reset of fault detection).

Information to a Control Centre

If the device has a serial system interface, stored information may additionally be transferred via this interface to a central control and storage device. Transmission is possible via different transmission protocols.

You may test whether the indications are transmitted correctly with DIGSI.

Also the information transmitted to the control centre can be influenced during operation or tests. The IEC 60870-5-103 protocol allows to identify all indications and measured values transferred to the central control system with an added indication „test mode“ while the device is being tested on site (test mode). This identification prevents the indications from being incorrectly interpreted as resulting from an actual power system disturbance or event. Alternatively, you may disable the transmission of indications to the system interface during tests („Transmission Block“).

To influence information at the system interface during test mode („test mode“ and „transmission block“), a CFC logic is required. Default settings already include this logic (see Appendix).

The SIPROTEC 4 System Description describes in detail how to activate and deactivate test mode and blocked data transmission.

Classification of Indications

Annunciations can be of one of the following types:

- Operational indications: messages generated while the device is in operation: They include information about the status of device functions, measurement data, system data, and similar information.
- Fault indications: messages from the last eight system faults that were processed by the device..
- Indications on Statistics: they include counters for the switching actions of the circuit breakers initiated by the device, maybe reclose commands as well as values of interrupted currents and accumulated fault currents.

A complete list of all indications and output functions generated by the device with the associated information number (No.) can be found in the Appendix. This list also indicates where each indication can be sent. If certain functions are not avaiable in a device version with reduced function scope or if they are configured as in the function scope, then the associated indications will not appear.

Operational Indications

Operational indications contain information generated by the device during operation about operational conditions.

Up to 200 operational indications are recorded in chronological order in the device. Newly generated indications are added to those already present. If the maximum capacity of the memory has been exceeded, the oldest indication will be overwritten.

Operational indications arrive automatically and can be read out from the device display or a personal computer at any time. Faults in the power system are indicated with „Network Fault“ and the present fault number. The fault indications contain detailed information on the response during system faults.

Fault Indications

Following a system fault it is possible to retrieve important information regarding its progress, such as pickup and trip. The system clock accurately provides the absolute time when the fault first occurred. The fault progression is output with a relative time referred to the instant of pickup so that the time until tripping and until reset of the trip command can be recognized. The resolution of the time information is 1 ms.

A system fault starts with the recognition of a fault by the fault detection, i.e. first pickup of any protection function, and ends with the reset of the fault detection, i.e. dropout of the last protection function. Where a fault causes several protection functions to pick up, the fault is considered to include all that occurred between pickup of the first protection function and dropout of the last protection function.

Spontaneous Indications

After a fault, the device displays automatically and without any operator action on its LCD display the most important fault data from the general device pickup in the sequence shown in Figure 2-186.

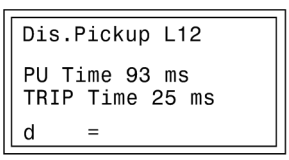

Figure 2-186 Display of spontaneous messages in the display — Example

Fault location options

In addition to the displays located on the device front and in DIGSI, there are additional display options available in particular for the fault location. They depend on the device version, configuration and allocation:

- If the device features the BCD output for the fault location, the transmitted figures mean the following:

  0 to 195: the calculated fault location in % of the line length (if greater than 100%, the error lies outside the protected line in a forward direction);

  197: negative fault location (fault in reverse direction);

  199 overflow.

Retrievable Indications

The indications of the last eight system faults can be retrieved and read out. A total of 600 indications can be stored. The oldest indications are erased for the newest fault indications when the buffer is full.

Spontaneous Indications

Spontaneous indications contain information that new indications have arrived. Each new incoming indication appears immediately, i.e. the user does not have to wait for an update or initiate one. This can be a useful help during operation, testing and commissioning.

Spontaneous indications can be read out via DIGSI. For more information see the SIPROTEC 4 System Description.

General Interrogation

The present condition of the SIPROTEC 4 device can be retrieved via DIGSI by viewing the contents of the General Interrogation. It shows all indications that are subject to general interrogation with their current value.

2.21.3 Statistics

Counting includes the number of trips initiated by 7SA522, the accumulated breaking currents resulting from trips initiated by protection functions, the number of close commands initiated by the auto-reclosure function.

2.21.3.1 Function Description

Counters and memories

The counters and memories of the statistics are saved by the device. Therefore, the information will not get lost in case the auxiliary voltage supply fails. The counters, however, can be reset to zero or to any value within the setting range.

Switching statistics can be viewed on the LCD of the device, or on a PC running DIGSI and connected to the operating or service interface.

A password is not required to read switching statistics; however, a password is required to change or delete the statistics. For more information see the SIPROTEC 4 System Description.

Number of trips

The number of trips initiated by the device 7SA522 is counted. If the device is capable of single-pole tripping, a separate counter for each circuit breaker pole is provided.

Number of automatic reclosing commands

If the device is equipped with the integrated automatic reclosure, the automatic close commands are also counted, separately for reclosure after 1-pole tripping, after 3-pole tripping as well as separately for the first reclosure cycle and other reclosure cycles.

Interrupted currents

Furthermore, for each trip command the interrupted current for each pole is acquired, output in the trip log and accumulated in a memory. The maximum interrupted current is stored as well. The indicated measured values are indicated in primary values.

Transmission statistics

In 7SA522 the protection communication is registered in statistics. The delay times of the information between the devices via interfaces (run and return) are measured steadily. The values are kept stored in the Statistics folder. The availability of the transmission media is also reported. The availability is indicated in % / min and % / h. This enables an evaluation of the transmission quality.

2.21.3.2 Setting Notes

Reading/Setting/Resetting

The SIPROTEC 4 System Description describes how to read out the statistical counters via the device front panel or DIGSI. Setting or resetting of these statistical counters takes place under the menu item **Annunciation** -> **STATISTIC** by overwriting the counter values displayed.

2.21.3.3 Information List

No.	Information	Type of Information	Comments
1000	# TRIPs=	VI	Number of breaker TRIP commands
1001	TripNo L1=	VI	Number of breaker TRIP commands L1
1002	TripNo L2=	VI	Number of breaker TRIP commands L2
1003	TripNo L3=	VI	Number of breaker TRIP commands L3
1027	Σ IL1 =	VI	Accumulation of interrupted current L1
1028	Σ IL2 =	VI	Accumulation of interrupted current L2
1029	Σ IL3 =	VI	Accumulation of interrupted current L3
1030	Max IL1 =	VI	Max. fault current Phase L1
1031	Max IL2 =	VI	Max. fault current Phase L2
1032	Max IL3 =	VI	Max. fault current Phase L3
2895	AR #Close1./1p=	VI	No. of 1st AR-cycle CLOSE commands,1pole
2896	AR #Close1./3p=	VI	No. of 1st AR-cycle CLOSE commands,3pole
2897	AR #Close2./1p=	VI	No. of higher AR-cycle CLOSE commands,1p
2898	AR #Close2./3p=	VI	No. of higher AR-cycle CLOSE commands,3p
7751	PI1 TD	MV	Prot.Interface 1:Transmission delay
7752	PI2 TD	MV	Prot.Interface 2:Transmission delay
7753	PI1A/m	MV	Prot.Interface 1: Availability per min.
7754	PI1A/h	MV	Prot.Interface 1: Availability per hour
7755	PI2A/m	MV	Prot.Interface 2: Availability per min.
7756	PI2A/h	MV	Prot.Interface 2: Availability per hour

2.21.4 Measurement

2.21.4.1 Method of Operation

A series of measured values and the values derived from them are available for on-site retrieval or for data transfer.

A precondition for the correct display of primary and percentage values is the complete and correct entry of the nominal values of the instrument transformers and the power system as well as the transformation ratio of the current and voltage transformers in the earth paths.

Display of measured values

Depending on ordering code, connection of the device and configured protection functions, only some of the operational measured values listed in Table 2-13 may be available. Of the current values I_{EE}, I_Y and I_P only the one which is connected to current measuring input I_4 can apply. Phase-to-earth voltages can only be measured if the phase-to-earth voltage inputs are connected. The displacement voltage $3U_0$ is e-n-voltage multiplied by $\sqrt{3}$ — if U_{en} is connected — or calculated from the phase-to-earth voltages $3U_0 = |\underline{U}_{L1} + \underline{U}_{L2} + \underline{U}_{L3}|$. All three voltage inputs must be phase-earth connected for this.

The zero sequence voltage U_0 indicates the voltage between the centre of the voltage triangle and earth.

If the device features synchronism and voltage check and if, when configuring the functions (address 135), these functions were set as ***Enabled*** and the parameter **U4 transformer** (address 210) to ***Usy2 transf.***, you can read out the characteristic values (voltages, frequencies, differences).

The power and operating values upon delivery are set such that power in line direction is positive. Active components in line direction and inductive reactive components in line direction are also positive. The same applies for the power factor $\cos\varphi$.

It is occasionally desired to define the power drawn from the line (e.g. as seen from the consumer) positively. Using parameter 1107 **P,Q sign** the signs for these components can be inverted.

The computation of the operational measured values is also executed during an existent system fault in intervals of approx. 0.5s.

Table 2-13 Operational measured values of the local device

Measured Values		primary	secondary	% referred to
I_{L1}; I_{L2}; I_{L3}	Phase currents	A	A	Rated operational current [1]
I_{EE}	Sensitive earth current	A	mA	Rated operational current [3][1]
$3I_0$ - calculated	Earth current	A	A	Rated operational current [1]
$3I_0$ - measured	Earth current	A	A	Rated operational current [3][1]
I_1, I_2	Positive and negative sequence component of currents	A	A	Rated operational current [1]
I_Y, I_P	Transformer Starpoint Current or Earth Current of the Parallel Line	A	A	Rated operational current [3][1]
U_{L1-E}, U_{L2-E}, U_{L3-E}	Phase-to-earth voltages	kV	V	Rated operational voltage / $\sqrt{3}$ [2]
U_{L1-L2}, U_{L2-L3}, U_{L3-L1}	Phase-to-phase voltages	kV	V	Rated operational voltage [2]
$3U_0$	Displacement Voltage	kV	V	Rated operational voltage / $\sqrt{3}$ [2]
U_0	Zero-sequence voltage	kV	V	Rated operational voltage / $\sqrt{3}$ [2]
U_1, U_2	Positive and negative sequence component of voltages	kV	V	Rated operational voltage / $\sqrt{3}$ [2]
U_X, U_{en}	Voltage at measuring input U_4	-	V	-
U_{sy2}	Voltage at measuring input U_4	kV	V	Rated operational voltage or Operational rated voltage / $\sqrt{3}$ [2][4][5]
$U_{1compound}$	Positive sequence component of voltages at the remote end (if compounding is active in voltage protection)	kV	V	Rated operational voltage / $\sqrt{3}$ [2]
R_{L1-E}, R_{L2-E}, R_{L3-E}, R_{L1-L2}, R_{L1-L2}, R_{L3-L1},	Operational resistance of all loops	Ω	Ω	-
X_{L1-E}, X_{L2-E}, X_{L3-E}, X_{L1-L2}, X_{L2-L3}, X_{L3-L1},	Operational reactance of all loops	Ω	Ω	-
S, P, Q	Apparent, active and reactive power	MVA, MW, MVAR	-	$\sqrt{3}\cdot U_N\cdot I_N$ operational rated quantities [1][2]
f	Frequency	Hz	Hz	Rated system frequency
cos φ	Power factor	(abs)	(abs)	-
U_{sy1}, U_{sy2}, U_{diff}	Measured voltage values (for synchronism check)	kV	-	-
f_{sy1}, f_{sy2}, f_{diff}	Measured frequency values (for synchronism check)	Hz	-	-
φ_{diff}	Amount of phase angle difference between the measuring points U_{sy1} and U_{sy2} (for synchronism check)	°	-	-

[1] according to address 1104
[2] according to address 1103
[3] considering factor 221 I4/Iph CT
[4] according to address 212 Usy2 connection
[5] considering factor 215 Usy1/Usy2 ratio

Remote measured values

During communication, the data of the other ends of the protected object can also be read out. For each of the devices, the currents and voltages involved as well as phase shifts between the local and remote measured quantities can be displayed. This is especially helpful for checking the correct and coherent phase allocation and polarity at the different line ends. Furthermore, the device addresses of the other devices are transmitted so that all important data of all ends are available in a substation. All possible data are listed in Table 2-14.

Table 2-14 Operational measured values transmitted from the other ends and compared to the local values

Data		Primary value
Device ADDR	Device address of the remote device	(absolute)
I_{L1}, I_{L2}, I_{L3} remote	Phase currents of the remote device	A
I_{L1}, I_{L2}, I_{L3} local	Phase currents of the local device	A
$\varphi(I_{L1})$, $\varphi(I_{L2})$, $\varphi(I_{L3})$ remote	Phase angle of the phase currents of the remote device referred to the local voltage U_{L1-E}	°
$\varphi(I_{L1})$, $\varphi(I_{L2})$, $\varphi(I_{L3})$ local	Phase angle of the phase currents of the local device referred to the local voltage U_{L1-E}	°
U_{L1}, U_{L2}, U_{L3} remote	Voltages of the remote device	kV
U_{L1}, U_{L2}, U_{L3} local	Voltages of the local device	kV
$\varphi(U_{L1})$, $\varphi(U_{L2})$ $\varphi(U_{L3})$ remote	Phase angle of the phase voltages of the remote device referred to the local voltage U_{L1-E}	°
$\varphi(U_{L1})$, $\varphi(U_{L2})$ $\varphi(U_{L3})$ local	Phase angle of the phase voltages of the local device referred to the local voltage U_{L1-E}	°

2.21.4.2 Information List

No.	Information	Type of Information	Comments
601	IL1 =	MV	I L1
602	IL2 =	MV	I L2
603	IL3 =	MV	I L3
610	3I0 =	MV	3I0 (zero sequence)
611	3I0sen=	MV	3I0sen (sensitive zero sequence)
612	IY =	MV	IY (star point of transformer)
613	3I0par=	MV	3I0par (parallel line neutral)
619	I1 =	MV	I1 (positive sequence)
620	I2 =	MV	I2 (negative sequence)
621	UL1E=	MV	U L1-E
622	UL2E=	MV	U L2-E
623	UL3E=	MV	U L3-E
624	UL12=	MV	U L12
625	UL23=	MV	U L23
626	UL31=	MV	U L31
627	Uen =	MV	Uen
631	3U0 =	MV	3U0 (zero sequence)
632	Usy2=	MV	Measured value Usy2
633	Ux =	MV	Ux (separate VT)
634	U1 =	MV	U1 (positive sequence)
635	U2 =	MV	U2 (negative sequence)

No.	Information	Type of Information	Comments
636	Udiff =	MV	Measured value U-diff (Usy1- Usy2)
637	Usy1=	MV	Measured value Usy1
638	Usy2=	MV	Measured value Usy2
641	P =	MV	P (active power)
642	Q =	MV	Q (reactive power)
643	PF =	MV	Power Factor
644	Freq=	MV	Frequency
645	S =	MV	S (apparent power)
646	F-sy2 =	MV	Frequency fsy2
647	F-diff=	MV	Frequency difference
648	φ-diff=	MV	Angle difference
649	F-sy1 =	MV	Frequency fsy1
679	U1co=	MV	U1co (positive sequence, compounding)
684	U0 =	MV	U0 (zero sequence)
966	R L1E=	MV	R L1E
967	R L2E=	MV	R L2E
970	R L3E=	MV	R L3E
971	R L12=	MV	R L12
972	R L23=	MV	R L23
973	R L31=	MV	R L31
974	X L1E=	MV	X L1E
975	X L2E=	MV	X L2E
976	X L3E=	MV	X L3E
977	X L12=	MV	X L12
978	X L23=	MV	X L23
979	X L31=	MV	X L31

2.21.5 Oscillographic Fault Records

2.21.5.1 Description

The 7SA522 distance protection is equipped with a fault recording function. The instantaneous values of the measured quantities

i_{L1}, i_{L2}, i_{L3}, i_E or i_{EE}, i_p, i_y and u_{L1}, u_{L2}, u_{L3}, u_{en} or u_{sync} or u_x, or $3 \cdot u_0$

(voltages depending on the connection) are sampled at intervals of 1 ms (for 50 Hz) and stored in a circulating buffer (20 samples per cycle). For a fault, the data are stored for an adjustable period of time, but no more than 5 seconds per fault. A total of 8 faults can be saved spanning a total time of 15 s maximum. The fault record memory is automatically updated with every new fault, so that no acknowledgment is required. The storage of fault values can be started by pickup of a protection function, as well as via binary input and via the serial interface.

The data can be retrieved via the serial interfaces by means of a personal computer and evaluated with the operating software DIGSI and the graphic analysis software SIGRA 4. The latter graphically represents the data recorded during the system fault and calculates additional information such as the impedance or r.m.s. values from the measured values. A selection may be made as to whether the currents and voltages are represented as primary or secondary values. Binary signal traces (marks) of particular events, e.g. „fault detection“, „tripping“ are also represented.

If the device has a serial system interface, the fault recording data can be passed on to a central device via this interface. Data are evaluated by appropriate programs in the central device. Currents and voltages are referred to their maximum values, scaled to their rated values and prepared for graphic presentation. Binary signal traces (marks) of particular events e.g. „fault detection“, „tripping“ are also represented.

In the event of transfer to a central device, the request for data transfer can be executed automatically and can be selected to take place after each fault detection by the protection, or only after a trip.

2.21.5.2 Setting Notes

General

Other settings pertaining to fault recording (waveform capture) are found in the submenu **Oscillographic Fault Records** submenu of the **Settings** menu. Waveform capture makes a distinction between the trigger instant for an oscillographic record and the criterion to save the record (address 402 **WAVEFORMTRIGGER**). This parameter can only be altered using DIGSI at **Additional Settings**. Normally the trigger instant is the device pickup, i.e. the pickup of an arbitrary protection function is assigned the time. The criterion for saving may be both the device pickup (***Save w. Pickup***) or the device trip (***Save w. TRIP***). A trip command issued by the device can also be used as trigger instant (***Start w. TRIP***), in this case it is also the saving criterion.

An oscillographic fault record includes data recorded prior to the time of trigger, and data after the dropout of the recording criterion. Usually this is also the extent of a fault recording (address 403 **WAVEFORM DATA** = ***Fault event***). If automatic reclosure is implemented, the entire system disturbance — possibly with several reclose attempts — up to the ultimate fault clearance can be stored (address 403 **WAVEFORM DATA** = ***Pow.Sys.Flt.***). This facilitates the representation of the entire system fault history, but also consumes storage capacity during the auto reclosure dead time(s). This parameter can only be altered with DIGSI at **Additional Settings**.

The actual storage time begins at the pre-fault time **PRE. TRIG. TIME** (address 411) ahead of the reference instant, and ends at the post-fault time **POST REC. TIME** (address 412) after the storage criterion has reset. The maximum recording duration to each fault **MAX. LENGTH** is set at address 410.

The fault recording can also be triggered via a binary input, via the keypad on the front of the device or with a PC via the operation or service interface. The storage is then dynamically triggered. The length of the fault recording is set in address 415 **BinIn CAPT.TIME** (maximum length however is **MAX. LENGTH**, address 410). Pre-fault and post-fault times will be included. If the binary input time is set for ∞, then the length of the record equals the time that the binary input is activated (static), or the **MAX. LENGTH** setting in address 410, whichever is shorter.

2.21.5.3 Settings

Addresses which have an appended "A" can only be changed with DIGSI, under Additional Settings.

Addr.	Parameter	Setting Options	Default Setting	Comments
402A	WAVEFORMTRIGGER	Save w. Pickup Save w. TRIP Start w. TRIP	Save w. Pickup	Waveform Capture
403A	WAVEFORM DATA	Fault event Pow.Sys.Flt.	Fault event	Scope of Waveform Data
410	MAX. LENGTH	0.30 .. 5.00 sec	2.00 sec	Max. length of a Waveform Capture Record
411	PRE. TRIG. TIME	0.05 .. 0.50 sec	0.25 sec	Captured Waveform Prior to Trigger
412	POST REC. TIME	0.05 .. 0.50 sec	0.10 sec	Captured Waveform after Event
415	BinIn CAPT.TIME	0.10 .. 5.00 sec; ∞	0.50 sec	Capture Time via Binary Input

2.21.5.4 Information List

No.	Information	Type of Information	Comments
-	FltRecSta	IntSP	Fault Recording Start
4	>Trig.Wave.Cap.	SP	>Trigger Waveform Capture
30053	Fault rec. run.	OUT	Fault recording is running

2.21.6 Demand Measurement Setup

Long-term average values are calculated by 7SA522 and can be read out with the point of time (date and time) of the last update.

2.21.6.1 Long-Term Average Values

The long-term average values of the three phase currents I_{Lx}, the positive sequence component I_1 of the three phase currents, and the real power P, reactive power Q, and apparent power S are calculated within a set period of time and indicated in primary values.

For the long-term average values mentioned above, the length of the time window for averaging and the frequency with which it is updated can be set. The corresponding min/max values can be reset via binary inputs, via the integrated control panel or using the DIGSI software.

2.21.6.2 Setting Notes

Mean values

The time interval for measured value averaging is set at address 2801 **DMD Interval**. The first number specifies the averaging time window in minutes while the second number gives the frequency of updates within the time window. ***15 Min., 3 Subs***, for example, means that time averaging occurs for all measured values that arrive within 15 minutes. The output is updated every 15/3 = 5 minutes.

At address 2802 **DMD Sync.Time** you can determine whether the averaging time, selected under address 2801, begins on the hour (***full hour***) or is to be synchronized with another point in time (***a quarter past***, ***half hour*** or ***a quarter to***).

If the settings for averaging are changed, then the measured values stored in the buffer are deleted, and new results for the average calculation are only available after the set time period has passed.

2.21.6.3 Settings

Addr.	Parameter	Setting Options	Default Setting	Comments
2801	DMD Interval	15 Min., 1 Sub 15 Min., 3 Subs 15 Min.,15 Subs 30 Min., 1 Sub 60 Min., 1 Sub	60 Min., 1 Sub	Demand Calculation Intervals
2802	DMD Sync.Time	On The Hour 15 After Hour 30 After Hour 45 After Hour	On The Hour	Demand Synchronization Time

2.21.6.4 Information List

No.	Information	Type of Information	Comments
833	I1dmd =	MV	I1 (positive sequence) Demand
834	Pdmd =	MV	Active Power Demand
835	Qdmd =	MV	Reactive Power Demand
836	Sdmd =	MV	Apparent Power Demand
963	IL1dmd=	MV	I L1 demand
964	IL2dmd=	MV	I L2 demand
965	IL3dmd=	MV	I L3 demand
1052	Pdmd Forw=	MV	Active Power Demand Forward
1053	Pdmd Rev =	MV	Active Power Demand Reverse
1054	Qdmd Forw=	MV	Reactive Power Demand Forward
1055	Qdmd Rev =	MV	Reactive Power Demand Reverse

2.21.7 Min/Max Measurement Setup

Minimum and maximum values are calculated by the 7SA522 and can be read out with the point of time (date and time) of the last update.

2.21.7.1 Reset

The minimum and maximum values can be reset, using binary inputs or by using the integrated control panel or the DIGSI software. Additionally, the reset can be carried out cyclically, beginning with a preset point of time.

2.21.7.2 Setting Notes

The tracking of minimum and maximum values can be reset automatically at a pre-defined point in time. To select this feature, address 2811 **MinMax cycRESET** is set to ***YES*** (default setting).

The point in time when reset is to take place (the minute of the day in which reset will take place) is set at address 2812 **MiMa RESET TIME**. The reset cycle in days is entered at address 2813 **MiMa RESETCYCLE**, and the beginning date of the cyclical process, from the time of the setting procedure (in days), is entered at address 2814 **MinMaxRES.START**.

2.21.7.3 Settings

Addr.	Parameter	Setting Options	Default Setting	Comments
2811	MinMax cycRESET	NO YES	YES	Automatic Cyclic Reset Function
2812	MiMa RESET TIME	0 .. 1439 min	0 min	MinMax Reset Timer
2813	MiMa RESETCYCLE	1 .. 365 Days	7 Days	MinMax Reset Cycle Period
2814	MinMaxRES.START	1 .. 365 Days	1 Days	MinMax Start Reset Cycle in

2.21.7.4 Information List

No.	Information	Type of Information	Comments
-	ResMinMax	IntSP_Ev	Reset Minimum and Maximum counter
395	>I MinMax Reset	SP	>I MIN/MAX Buffer Reset
396	>I1 MiMaReset	SP	>I1 MIN/MAX Buffer Reset
397	>U MiMaReset	SP	>U MIN/MAX Buffer Reset
398	>UphphMiMaRes	SP	>Uphph MIN/MAX Buffer Reset
399	>U1 MiMa Reset	SP	>U1 MIN/MAX Buffer Reset
400	>P MiMa Reset	SP	>P MIN/MAX Buffer Reset
401	>S MiMa Reset	SP	>S MIN/MAX Buffer Reset
402	>Q MiMa Reset	SP	>Q MIN/MAX Buffer Reset
403	>Idmd MiMaReset	SP	>Idmd MIN/MAX Buffer Reset
404	>Pdmd MiMaReset	SP	>Pdmd MIN/MAX Buffer Reset
405	>Qdmd MiMaReset	SP	>Qdmd MIN/MAX Buffer Reset
406	>Sdmd MiMaReset	SP	>Sdmd MIN/MAX Buffer Reset
407	>Frq MiMa Reset	SP	>Frq. MIN/MAX Buffer Reset
408	>PF MiMaReset	SP	>Power Factor MIN/MAX Buffer Reset
837	IL1d Min	MVT	I L1 Demand Minimum
838	IL1d Max	MVT	I L1 Demand Maximum
839	IL2d Min	MVT	I L2 Demand Minimum
840	IL2d Max	MVT	I L2 Demand Maximum
841	IL3d Min	MVT	I L3 Demand Minimum
842	IL3d Max	MVT	I L3 Demand Maximum
843	I1dmdMin	MVT	I1 (positive sequence) Demand Minimum
844	I1dmdMax	MVT	I1 (positive sequence) Demand Maximum
845	PdMin=	MVT	Active Power Demand Minimum
846	PdMax=	MVT	Active Power Demand Maximum
847	QdMin=	MVT	Reactive Power Demand Minimum
848	QdMax=	MVT	Reactive Power Demand Maximum
849	SdMin=	MVT	Apparent Power Demand Minimum
850	SdMax=	MVT	Apparent Power Demand Maximum
851	IL1Min=	MVT	I L1 Minimum
852	IL1Max=	MVT	I L1 Maximum
853	IL2Min=	MVT	I L2 Mimimum
854	IL2Max=	MVT	I L2 Maximum
855	IL3Min=	MVT	I L3 Minimum
856	IL3Max=	MVT	I L3 Maximum
857	I1 Min=	MVT	Positive Sequence Minimum
858	I1 Max=	MVT	Positive Sequence Maximum
859	UL1EMin=	MVT	U L1E Minimum
860	UL1EMax=	MVT	U L1E Maximum
861	UL2EMin=	MVT	U L2E Minimum
862	UL2EMax=	MVT	U L2E Maximum
863	UL3EMin=	MVT	U L3E Minimum
864	UL3EMax=	MVT	U L3E Maximum
865	UL12Min=	MVT	U L12 Minimum

No.	Information	Type of Information	Comments
867	UL12Max=	MVT	U L12 Maximum
868	UL23Min=	MVT	U L23 Minimum
869	UL23Max=	MVT	U L23 Maximum
870	UL31Min=	MVT	U L31 Minimum
871	UL31Max=	MVT	U L31 Maximum
874	U1 Min =	MVT	U1 (positive sequence) Voltage Minimum
875	U1 Max =	MVT	U1 (positive sequence) Voltage Maximum
880	SMin=	MVT	Apparent Power Minimum
881	SMax=	MVT	Apparent Power Maximum
882	fMin=	MVT	Frequency Minimum
883	fMax=	MVT	Frequency Maximum
1040	Pmin Forw=	MVT	Active Power Minimum Forward
1041	Pmax Forw=	MVT	Active Power Maximum Forward
1042	Pmin Rev =	MVT	Active Power Minimum Reverse
1043	Pmax Rev =	MVT	Active Power Maximum Reverse
1044	Qmin Forw=	MVT	Reactive Power Minimum Forward
1045	Qmax Forw=	MVT	Reactive Power Maximum Forward
1046	Qmin Rev =	MVT	Reactive Power Minimum Reverse
1047	Qmax Rev =	MVT	Reactive Power Maximum Reverse
1048	PFminForw=	MVT	Power Factor Minimum Forward
1049	PFmaxForw=	MVT	Power Factor Maximum Forward
1050	PFmin Rev=	MVT	Power Factor Minimum Reverse
1051	PFmax Rev=	MVT	Power Factor Maximum Reverse
10102	3U0min =	MVT	Min. Zero Sequence Voltage 3U0
10103	3U0max =	MVT	Max. Zero Sequence Voltage 3U0

2.21.8 Set Points (Measured Values)

SIPROTEC 4 devices allow thresholds (set points) to be set for some measured and metered values. If one of these set points is reached or is exceeded positively or negatively during operation, the device generates an alarm which is displayed as an operational indication. This can be configured to LEDs and/or binary outputs, transferred via the interfaces and interconnected in DIGSI CFC. In addition you can use DIGSI CFC to configure set points for further measured and metered values and configure these via the DIGSI device matrix.

In contrast to the actual protection functions the limit value monitoring function operates in the background; therefore it may not pick up if measured values are changed spontaneously in the event of a fault and if protection functions are picked up. Furthermore, since an indication is only issued when the set point limit is repeatedly exceeded, the limit value monitoring functions do not react as fast as protection functions trip signals.

2.21.8.1 Limit value monitoring

Set points can be set for the following measured and metered values:

- IL1dmd>: Exceeding a preset maximum average value in Phase L1.
- IL2dmd>: Exceeding a preset maximum average value in Phase L2.
- IL3dmd>: Exceeding a preset maximum average value in Phase L3.
- I1dmd>: Exceeding a preset maximum average value of the positive sequence system currents.
- |Pdmd|> : Exceeding a preset maximum average active power.
- |Qdmd|>: Exceeding a preset maximum average reactive power.
- |Sdmd|> : Exceeding a preset maximum average value of the apparent power.
- |cosφ|< falling below a preset power factor.

2.21.8.2 Setting Notes

Set Points for Measured Values

The settings are entered under **MEASUREMENT** in the sub-menu **SET POINTS (MV) (MV)** by overwriting the existing values.

2.21.8.3 Information List

No.	Information	Type of Information	Comments
-	IL1dmd>	LV	Upper setting limit for IL1dmd
-	IL2dmd>	LV	Upper setting limit for IL2dmd
-	IL3dmd>	LV	Upper setting limit for IL3dmd
-	I1dmd>	LV	Upper setting limit for I1dmd
-	|Pdmd|>	LV	Upper setting limit for Pdmd
-	|Qdmd|>	LV	Upper setting limit for Qdmd
-	Sdmd>	LV	Upper setting limit for Sdmd
-	PF<	LV	Lower setting limit for Power Factor
273	SP. IL1 dmd>	OUT	Set Point Phase L1 dmd>
274	SP. IL2 dmd>	OUT	Set Point Phase L2 dmd>
275	SP. IL3 dmd>	OUT	Set Point Phase L3 dmd>
276	SP. I1dmd>	OUT	Set Point positive sequence I1dmd>
277	SP. |Pdmd|>	OUT	Set Point |Pdmd|>
278	SP. |Qdmd|>	OUT	Set Point |Qdmd|>
279	SP. |Sdmd|>	OUT	Set Point |Sdmd|>
285	cosφ alarm	OUT	Power factor alarm

2.21.9 Energy

Metered values for active and reactive power are determined in the background by the processor system. They can be called up at the front of the device, read out via the operating interface using a PC with DIGSI, or transferred to a central master station via the system interface.

2.21.9.1 Energy Metering

7SA522 integrates the calculated power which is then made available with the measured values. The components as listed in table 2-15 can be read out. The signs of the operating values depend on the setting at address 1107 `P,Q sign` (see Section 2.21.4 under margin heading „Display of Measured Values“).

It is important to remember that 7SA522 is, above all, a protection device. The accuracy of the metered values depends on the instrument transformers (normally protection core) and the device tolerances. The metering is therefore not suited for tariff purposes.

The counters can be reset to zero or any initial value (see also SIPROTEC 4 System Description).

Table 2-15 Operational metered values

Measured values		Primary
W_p+	Active power, output	kWh, MWh, GWh
W_p–	Active power, input	kWh, MWh, GWh
W_q+	Reactive power, output	kVARh, MVARh, GVARh
W_q–	Reactive power, input	kVARh, MVARh, GVARh

2.21.9.2 Setting Notes

Retrieving parameters

The SIPROTEC System Description describes in detail how to read out the statistical counters via the device front panel or DIGSI. The values are added up in direction of the protected object, provided the direction was set as „forward“ (address 201).

2.21.9.3 Information List

No.	Information	Type of Information	Comments
-	Meter res	IntSP_Ev	Reset meter
888	Wp(puls)	PMV	Pulsed Energy Wp (active)
889	Wq(puls)	PMV	Pulsed Energy Wq (reactive)
924	Wp+=	MVMV	Wp Forward
925	Wq+=	MVMV	Wq Forward
928	Wp-=	MVMV	Wp Reverse
929	Wq-=	MVMV	Wq Reverse

2.22 Command Processing

The SIPROTEC 4 7SA522 includes a command processing for initiating switching operations in the system. Control can originate from four command sources:

- Local operation using the keypad on the local user interface of the device,
- Operation using DIGSI,
- Remote operation using a substation automation and control system (e.g. SICAM),
- Automatic functions (e.g. using binary inputs, CFC).

The number of switchgear devices that can be controlled is basically limited by the number of available and required binary inputs and outputs. For the output of control commands it has to be ensured that all the required binary inputs and outputs are configured and provided with the correct properties.

If specific interlocking conditions are needed for the execution of commands, the user can program the device with bay interlocking by means of the user-defined logic functions (CFC). The interlocking conditions of the system can be injected via the system interface and must be allocated accordingly.

The procedure for switching resources is described in the SIPROTEC 4 System Description under Control of Switchgear.

2.22.1 Control Authorization

2.22.1.1 Type of Commands

Commands to the Process

These commands are directly output to the switchgear to change their process state:

- Commands for the operation of circuit breakers (asynchronous; or synchronized through integration of the synchronism check and closing control function) as well as commands for the control of isolators and earth switches.
- Step commands, e.g. for raising and lowering transformer taps,
- Setpoint commands with configurable time settings, e.g. to control Petersen coils.

Device-internal Commands

These commands do not directly operate binary outputs. They serve for initiating internal functions, communicating the detection of status changes to the device or for acknowledging them.

- Manual override commands for „manual update“ of information on process-dependent objects such as annunciations and switching states, e.g. if the communication with the process is interrupted. Manually overridden objects are marked as such in the information status and can be displayed accordingly.
- Tagging commands (for „setting“) the information value of internal objects, such as switching authority (remote/local), parameter changeovers,blocking of transmission and deletion/presetting of metered values.
- Acknowledgment and resetting commands for setting and resetting internal buffers or data stocks.
- Information status commands to set/delete the additional „Information Status“ item of a process object, such as
  - Acquisition blocking,
  - Output blocking.

2.22.1.2 Sequence in the Command Path

Safety mechanisms in the command sequence ensure that a switch command can only be released after a thorough check of preset criteria has been successfully concluded. Additionally, user-defined interlocking conditions can be configured separately for each device. The actual execution of the command is also monitored after its release. The entire sequence of a command is described briefly in the following list:

Checking a Command Path

Please observe the following:

- Command entry, e.g. using the keypad on the local user interface of the device
  - Check password → access rights;
  - Check switching mode (interlocking activated/deactivated) → selection of deactivated interlocking status.
- User configurable interlocking checks:
  - Switching authority;
  - Device position check (set vs. actual comparison);
  - Zone controlled / bay interlocking (logic using CFC);
  - System interlocking (centrally via SICAM);
  - Double operation (interlocking against parallel switching operation);
  - Protection blocking (blocking of switching operations by protection functions);
  - Checking the synchronism before a close command.
- Fixed commands:
  - Internal process time (software watch dog which checks the time for processing the control action between initiation of the control and final close of the relay contact);
  - Configuration in process (if setting modification is in process, commands are rejected or delayed);
  - Equipment present as output;
  - Output block (if an output block has been programmed for the circuit breaker, and is active at the moment the command is processed, then the command is rejected);
  - Component hardware malfunction;
  - Command in progress (only one command can be processed at a time for each circuit breaker or switch);
  - 1–of–n check (for multiple allocations such as common contact relays or multiple protection commands configured to the same contact it is checked if a command procedure was already initiated for the output relays concerned or if a protection command is present. Superimposed commands in the same switching direction are tolerated).

Command Execution Monitoring

The following is monitored:

- Interruption of a command because of a cancel command,
- Running time monitor (feedback monitoring time).

2.22.1.3 Interlocking

Interlocking can be executed by the user-defined logic (CFC). Switchgear interlocking checks in a SICAM/SIPROTEC 4 system are normally divided in the following groups:

- System interlocking checked by a central control system (for interbay interlocking),
- Zone controlled / bay interlocking checked in the bay device (for the feeder).
- Cross-bay interlocking via GOOSE messages directly between bay controllers and protection relays (with rollout of IEC 61850; inter-relay communication by GOOSE messaging is performed via the EN100 module)

System interlocking is based on the process image in the central device. Zone controlled / bay interlocking relies on the object database (feedback information) of the bay unit (here the SIPROTEC 4 relay) as was determined during configuration (see SIPROTEC 4 System Description).

The extent of the interlocking checks is determined by the configuration and interlocking logic of the relay. For more information on GOOSE messaging, please refer to the SIPROTEC 4 System Description.

Switching objects that require system interlocking in a central control system are marked by a specific parameter inside the bay unit (via configuration matrix).

For all commands, operation with interlocking (normal mode) or without interlocking (test mode) can be selected:

- For local commands by reprogramming the settings with password check,
- For automatic commands, via command processing by CFC and Deactivated Interlocking Recognition,
- For local / remote commands, using an additional interlocking disable command via PROFIBUS.

Interlocked/non-interlocked Switching

The configurable command checks in the SIPROTEC 4 devices are also called „standard interlocking“. These checks can be activated via DIGSI (interlocked switching/tagging) or deactivated (non-interlocked).

De-interlocked or non-interlocked switching means that the configured interlock conditions are not tested.

Interlocked switching means that all configured interlocking conditions are checked within the command processing. If a condition could not be fulfilled, the command will be rejected by an indication with a minus added to it, e.g. „CO–“, followed by an operation response information. The command is rejected if a synchronism check is carried out before closing and the conditions for synchronism are not fulfilled. Table 2-16 shows some types of commands and indications. The indications marked with *) are displayed only in the event logs on the device display; for DIGSI they appear in spontaneous indications.

Table 2-16 Command types and corresponding indications

Type of Command	Control	Cause	Indication
Control issued	Switching	CO	CO+/–
Manual tagging (positive / negative)	Manual tagging	MT	MT+/–
Information state command, Input blocking	Input blocking	ST	ST+/– *)
Information state command, Output blocking	Output blocking	ST	ST+/– *)
Cancel command	Cancel	CA	CA+/–

The plus sign in the indication is a confirmation of the command execution: The command output has a positive result, as expected. A minus sign means a negative, i.e. an unexpected result; the command was rejected. Figure 2-187 shows an example for successful switching of the circuit breaker in the Event Log (command and feedback).

The check of interlocking can be programmed separately for all switching devices and tags that were set with a tagging command. Other internal commands such as overriding or abort are not tested, i.e. are executed independently of the interlockings.

```
EVENT LOG
--------------------
19.06.01 11:52:05,625
Q0          CO+ Close

19.06.01 11:52:06,134
Q0          FB+ Close
```

Figure 2-187 Example of an operational indication for switching circuit breaker (Q0)

Standard Interlocking

The standard interlocking includes the checks for each switchgear which were set during the configuration of inputs and outputs, see SIPROTEC 4 System Description.

An overview for processing the interlocking conditions in the relay is shown in Figure 2-188.

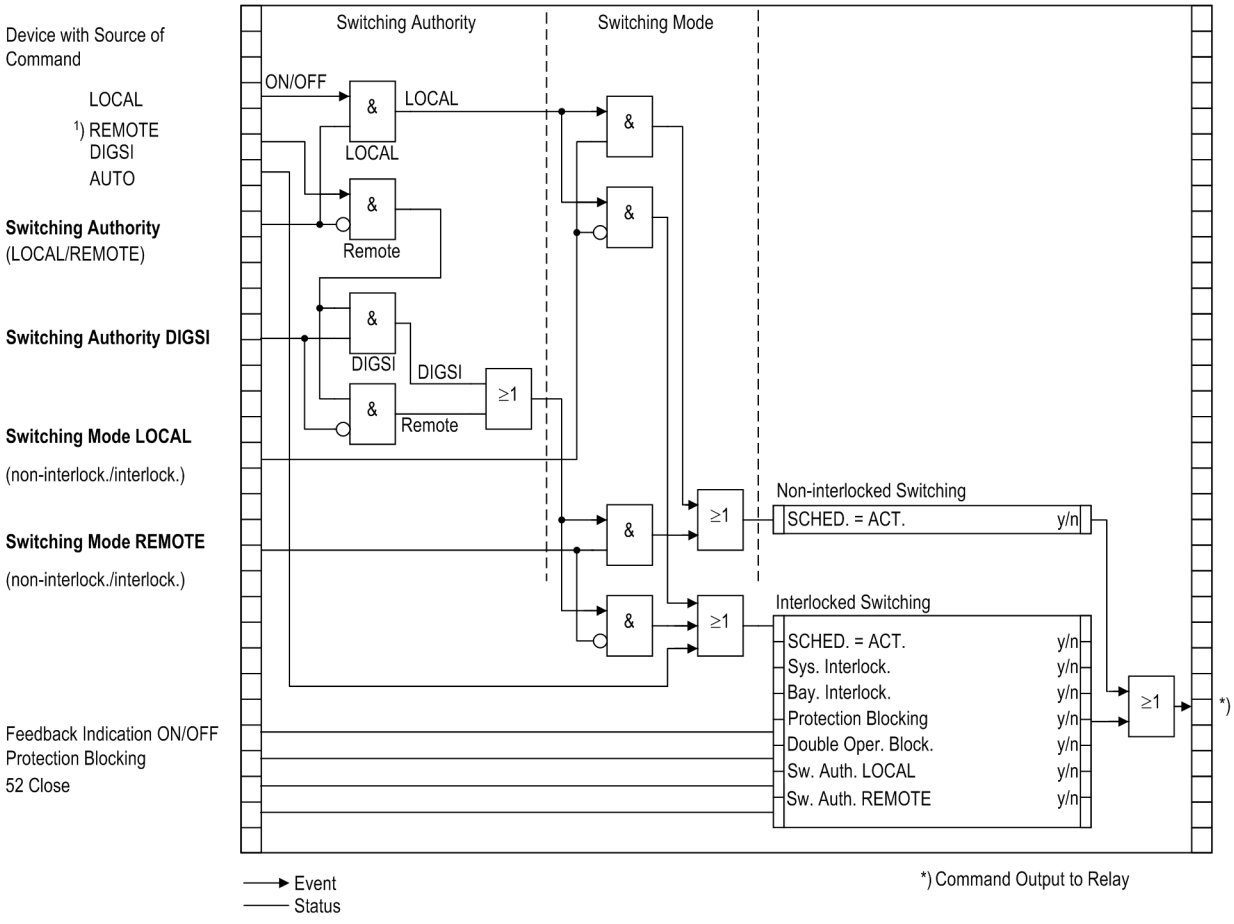

Figure 2-188 Standard interlockings

1) Source of Command REMOTE includes LOCAL.

LOCAL Command using substation controller

REMOTE Command via telecontrol station to power system management and from power system management to the device)

The display shows the configured interlocking reasons. The are marked by letters as explained in Table 2-17.

Table 2-17 Interlocking Commands

Interlocking Commands	Command	Display
Switching Authority	L	L
System Interlocking	S	S
Bay Interlocking	Z	Z
SET = ACTUAL (switch direction check)	P	P
Protection Blockage	B	B

Figure 2-189 shows all interlocking conditions (which usually appear in the display of the device) for three switchgear items with the relevant abbreviations explained in Table 2-17. All parameterised interlocking conditions are indicated.

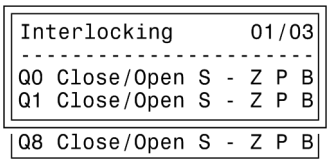

Figure 2-189 Example of configured interlocking conditions

Control Logic via CFC

For bay interlocking, a release logic can be created using CFC. Via specific release conditions the information „released“ or „bay interlocked“ are available, e.g. object „Release CD Close“ and „Release CD Open“ with the information values: ON / OFF).

2.22.1.4 Information List

No.	Information	Type of Information	Comments
-	ModeREMOTE	IntSP	Controlmode REMOTE
-	Cntrl Auth	IntSP	Control Authority
-	ModeLOCAL	IntSP	Controlmode LOCAL

2.22.2 Control Device

2.22.2.1 Information List

No.	Information	Type of Information	Comments
-	Breaker	CF_D12	Breaker
-	Breaker	DP	Breaker
-	Disc.Swit.	CF_D2	Disconnect Switch
-	Disc.Swit.	DP	Disconnect Switch
-	EarthSwit	CF_D2	Earth Switch
-	EarthSwit	DP	Earth Switch
-	Brk Open	IntSP	Interlocking: Breaker Open
-	Brk Close	IntSP	Interlocking: Breaker Close
-	Disc.Open	IntSP	Interlocking: Disconnect switch Open
-	Disc.Close	IntSP	Interlocking: Disconnect switch Close
-	E Sw Open	IntSP	Interlocking: Earth switch Open
-	E Sw Cl.	IntSP	Interlocking: Earth switch Close
-	Q2 Op/Cl	CF_D2	Q2 Open/Close
-	Q2 Op/Cl	DP	Q2 Open/Close
-	Q9 Op/Cl	CF_D2	Q9 Open/Close
-	Q9 Op/Cl	DP	Q9 Open/Close
-	Fan ON/OFF	CF_D2	Fan ON/OFF
-	Fan ON/OFF	DP	Fan ON/OFF
-	UnlockDT	IntSP	Unlock data transmission via BI
31000	Q0 OpCnt=	VI	Q0 operationcounter=
31001	Q1 OpCnt=	VI	Q1 operationcounter=
31002	Q2 OpCnt=	VI	Q2 operationcounter=
31008	Q8 OpCnt=	VI	Q8 operationcounter=
31009	Q9 OpCnt=	VI	Q9 operationcounter=

2.22.3 Process Data

During the processing of commands, independently of the further allocation and processing of indications, command and process feedbacks are sent to the indication processing. These indications contain information on the cause. With the corresponding allocation (configuration) these indications are entered in the event log, thus serving as a report.

A listing of possible operational indications and their meaning, as well as the command types needed for tripping and closing the switchgear or for raising and lowering transformer taps and detailed information are described in the SIPROTEC 4 System Description.

2.22.3.1 Method of Operation

Acknowledgement of Commands to the Device Front

All indications with the source of command LOCAL are transformed into a corresponding response and shown in the display of the device.

Acknowledgement of commands to local/remote/DIGSI

The acknowledgement of indications which relate to commands with the origin “Command Issued = Local/ Remote/DIGSI” are sent back to the initiating point independent of the routing (configuration on the serial digital interface).

The acknowledgement of commands is therefore not executed by a response indication as it is done with the local command but by ordinary command and feedback information recording.

Feedback monitoring

Command processing time monitors all commands with feedback. Parallel to the command, a monitoring time period (command runtime monitoring) is started which checks whether the switchgear has achieved the desired final state within this period. The monitoring time is stopped as soon as the feedback information arrives. If no feedback information arrives, a response „`Time Limit Expired`“ appears and the process is terminated.

Commands and their feedbacks are also recorded as operational indications. Normally the execution of a command is terminated as soon as the feedback information (**FB+**) of the relevant switchgear arrives or, in case of commands without process feedback information, the command output resets.

In the feedback, the plus sign means that a command has been positively completed. The command was as expected, in other words positive. The "minus" is a negative confirmation and means that the command was not executed as expected.

Command output/switching relays

The command types needed for tripping and closing of the switchgear or for raising and lowering transformer taps have been defined during the configuration, see also SIPROTEC 4 System Description.

2.22.3.2 Information List

No.	Information	Type of Information	Comments
-	>Door open	SP	>Cabinet door open
-	>CB wait	SP	>CB waiting for Spring charged
-	>Err Mot U	SP	>Error Motor Voltage
-	>ErrCntrlU	SP	>Error Control Voltage
-	>SF6-Loss	SP	>SF6-Loss
-	>Err Meter	SP	>Error Meter
-	>Tx Temp.	SP	>Transformer Temperature
-	>Tx Danger	SP	>Transformer Danger

2.22.4 Protocol

2.22.4.1 Information List

No.	Information	Type of Information	Comments
-	SysIntErr.	IntSP	Error Systeminterface

■

Mounting and Commissioning 3

This chapter is primarily intended for experienced commissioning engineers. The commissioning engineer must be familiar with the commissioning of protection and control systems, with the management of power systems and with the relevant safety rules and guidelines. Under certain circumstances adaptations of the hardware to the particular power system data may be necessary. The primary tests require the protected object (line, transformer etc.) to carry load.

3.1	Mounting and Connections	404
3.2	Checking Connections	435
3.3	Commissioning	441
3.4	Final Preparation of the Device	470

3.1 Mounting and Connections

General

WARNING!

Warning of improper transport, storage, installation, and application of the device.

Non-observance can result in death, personal injury or substantial property damage.

Trouble free and safe use of this device depends on proper transport, storage, installation, and application of the device according to the warnings in this instruction manual.

Of particular importance are the general installation and safety regulations for work in a high-voltage environment (for example, VDE, IEC, EN, DIN, or other national and international regulations). These regulations must be observed.

3.1.1 Configuration Information

Prerequisites

For installation and connections the following conditions must be met:

The rated device data has been tested as recommended in the SIPROTEC 4 System Description and their compliance with the Power System Data is verified.

Connection Variants

General Diagrams are shown in Appendix A.2. Connection examples for current transformer and voltage transformer circuits are provided in Appendix A.3. It must be checked that the setting of the **`P.System Data 1`**, Section 2.1.2.1, was made in accordance to the device connections.

Currents

Appendix A.3 shows current transformer connection examples in dependence on network conditions.

For normal connection, address 220 **`I4 transformer`** = ***`In prot. line`*** must be set and furthermore, address 221 **`I4/Iph CT`** = ***`1.000`***.

When using separate earth current transformers, address 220 **`I4 transformer`** = ***`In prot. line`*** must be set. The setting value of the address 221 **`I4/Iph CT`** may deviate from ***`1`***. For information on the calculation, please refer to section 2.1.2.1.

Furthermore, examples for the connection of the earth current of a parallel line (for parallel line compensation) are shown. Address 220 **`I4 transformer`** must be set ***`In paral. line`*** here. The setting value address 221 **`I4/Iph CT`** may deviate from ***`1`***. For information on the calculation hints, please refer to Section 2.1.2.1 under „Connection of the Currents“.

The other figures show examples for the connection of the earth current of a source transformer. The address 220 **`I4 transformer`** must be set ***`IY starpoint`*** here. Hints regarding the factor 221 **`I4/Iph CT`** can also be found in Section 2.1.2.1.

Voltages

Connection examples for current and voltage transformer circuits are provided in Appendix A.3.

For the normal connection the 4th voltage measuring input is not used; correspondingly the address must be set to 210 **U4 transformer** = ***Not connected***.

For an additional connection of an e-n-winding of a set of voltage transformers, the address 210 **U4 transformer** = ***Udelta transf.*** must be set. The setting value of the address 211 **Uph / Udelta** depends on the transformation ratio of the e–n-winding. For additional hints, please refer to Section 2.1.2.1 under “Transformation Ratio“.

In further connection examples also the e–n winding of a set of voltage transformers is connected, in this case, however of a central set of transformers at a busbar. For more information refer to the previous paragraph.

Further figures show examples for the additional connection of a different voltage, in this case the busbar voltage (e.g. for voltage protection or synchronism check). For the voltage protection the address 210 **U4 transformer** = ***Ux transformer*** has to be set,**U4 transformer** = ***Usy2 transf.*** for the synchronism check. The address 215 **Usy1/Usy2 ratio** is only then not equal to ***1*** when feeder transformer and busbar transformer have a different transformation ratio. .

If there is a power transformer between the set of busbar voltage transformers and the set of feeder voltage transformers, the phase displacement of the voltage caused by the power transformer must be compensated for the synchronism check if used. In this case also check the addresses 212 **Usy2 connection**, 214 φ **Usy2-Usy1** and 215 **Usy1/Usy2 ratio**. You will find detailed notes and an example in Section 2.1.2.1 under „Voltage connection“.

Binary Inputs and Outputs

The connections to the power plant depend on the possible allocation of the binary inputs and outputs, i.e. how they are assigned to the power equipment. The preset allocation can be found in the tables in Section A.4 of the Appendix. Check also whether the labelling corresponds to the allocated indication functions.

Changing Setting Group

If binary inputs are used to change setting groups, please observe the following:

- To enable the control of 4 possible setting groups 2 binary inputs have to be available. One binary input must be set for „>Set Group Bit0“, the other input for „>Set Group Bit1“.
- To control two setting groups, one binary input set for „>Set Group Bit0“ is sufficient since the binary input „>Set Group Bit1“, which is not assigned, is considered to be not controlled.
- The status of the signals controlling the binary inputs to activate a particular setting group must remain constant as long as that particular group is to remain active.

The following Table shows the relationship between binary inputs and the setting groups A to D. Principal connection diagrams for the two binary inputs are illustrated in the following Figure 3-1. The Figure illustrates an example in which both Set Group Bits 0 and 1 are configured to be controlled (actuated) when the associated binary input is energized (high).

Table 3-1 Changing setting groups with binary inputs

Binary Input		Active settings group
>Set Group Bit 0	**>Set Group Bit 1**	
Not energized	Not energized	Group A
Energized	Not energized	Group B
Not energized	Energized	Group C
Energized	Energized	Group D

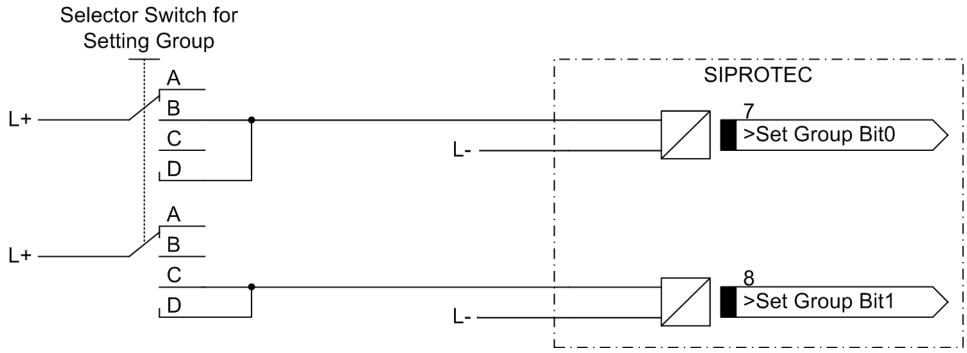

Figure 3-1 Connection diagram (example) for setting group switching with binary inputs

Trip Circuit Supervision

Please note that two binary inputs or one binary input and one bypass resistor R must be connected in series. The pick-up threshold of the binary inputs must therefore be substantially below half the rated control DC voltage.

If two binary inputs are used for the trip circuit supervision, these binary inputs must be isolated, i.o.w. not be communed with each other or with another binary input.

If one binary input is used, a bypass resistor R must be inserted (see following figure). The resistor R is connected in series with the second circuit breaker auxiliary contact (Aux2) to allow the detection of a trip circuit failure even when circuit breaker auxiliary contact (Aux1) is open and the command relay has dropped out. The value of this resistor must be such that in the circuit breaker open condition (Aux1 is open and Aux2 is closed) the circuit breaker trip coil (TC) is no longer picked up and binary input (BI1) is still picked up if the command relay contact is open.

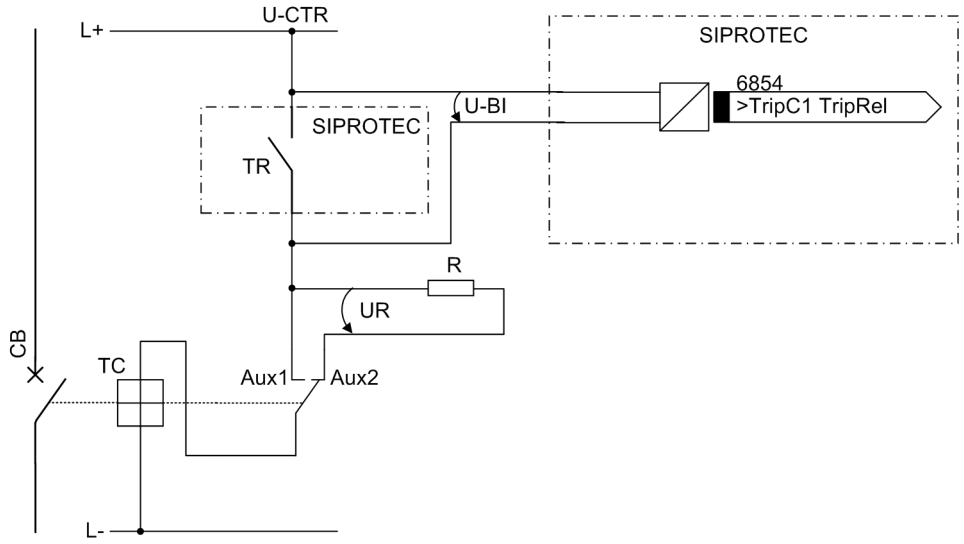

Figure 3-2 Principle of the trip circuit supervision with one binary input

TR	Trip relay contact
CB	Circuit breaker
TC	Circuit breaker trip coil
Aux1	Circuit breaker auxiliary contact (NO contact)
Aux2	Circuit breaker auxiliary contact (NC contact)
U-CTR	Control voltage for trip circuit
U-BI	Input voltage of binary input
R	Bypass resistor
UR	Voltage across the bypass resistor

This results in an upper limit for the resistance dimension, R_{max}, and a lower limit R_{min}, from which the optimal value of the arithmetic mean R should be selected:

$$R = \frac{R_{max} + R_{min}}{2}$$

In order that the minimum voltage for controlling the binary input is ensured, R_{max} is derived as:

$$R_{max} = \left(\frac{U_{CTR} - U_{BI\ min}}{I_{BI\ (High)}}\right) - R_{TC}$$

To keep the circuit breaker trip coil not energized in the above case, R_{min} is derived as:

$$R_{min} = R_{TC} \cdot \left(\frac{U_{CTR} - U_{TC\ (LOW)}}{U_{TC\ (LOW)}}\right)$$

$I_{BI\ (HIGH)}$	Constant current with activated BI (= 1.8 mA)
U_{BImin}	Minimum control voltage for BI (19 V for delivery setting for nominal voltages of 24/48/60 V; 88 V for delivery setting for nominal voltages of 110/125/220/250 V, 176 V for delivery setting for nominal voltages of 220/250 V)
U_{CTR}	Control voltage for trip circuit
R_{TC}	DC resistance of circuit breaker trip coil
$U_{TC\ (LOW)}$	Maximum voltage on the circuit breaker trip coil that does not lead to tripping

If the calculation results that $R_{max} < R_{min}$, then the calculation must be repeated, with the next lowest switching threshold $U_{BI\ min}$, and this threshold must be implemented in the relay using plug-in jumpers (see Section „Hardware Modifications“).

For the power consumption of the resistance the following applies:

$$P_R = I^2 \cdot R = \left(\frac{U_{CTR}}{R + R_{CBTC}}\right)^2 \cdot R$$

Example:

$I_{BI\ (HIGH)}$	1.8 mA (SIPROTEC 4 7SA522)
U_{BImin}	19 V for delivery setting for nominal voltages of 24/48/60 V (from the 7SA522); 88 V for delivery setting for nominal voltages of 110/125/220/250 V (from 7SA522); 176 V for delivery setting for nominal voltages of 220/250 V (from the 7SA522)
U_{CTR}	110 V (system / trip circuit)
R_{TC}	500 Ω (system / trip circuit)
$U_{TC\ (LOW)}$	2 V (system / trip circuit)

$$R_{max} = \left(\frac{110\ V - 17\ V}{1.8\ mA}\right) - 500\ \Omega = 51.17\ k\Omega$$

$$R_{min} = 500\ \Omega \cdot \left(\frac{110\ V - 2\ V}{2\ V}\right) = 27\ k\Omega$$

$$R = \frac{R_{max} + R_{min}}{2} = 39.1\ k\Omega$$

The closest standard value of 39 kΩ is selected; the power is:

$$P_R = \left(\frac{110\ V}{39\ k\Omega + 0.5\ k\Omega}\right)^2 \cdot 39\ k\Omega \geq 0.3\ W$$

3.1.2 Hardware Modifications

3.1.2.1 General

A subsequent adaptation of hardware to the power system conditions can, for example, become necessary with regard to the control voltage for binary inputs or the termination of bus-capable interfaces. Follow the procedure described in this section whenever hardware modifications are done.

Auxiliary Voltage

There are different power supply voltage ranges for the auxiliary voltage (refer to the Ordering Information in Appendix A.1). The power supplies of the variants for 60/110/125 VDC and 110/125/220 VDC, 115 VAC are largely interchangeable by modifying the position of the jumpers. The assignment of these jumpers to the nominal voltage ranges and the spatial layout on the PCB are described further below at „Input/Output Board C-I/O-1 and C-I/O-10“. When the relays are delivered, these jumpers are set according to the name-plate sticker. Generally, they need not be altered.

Life Status contact

The life contact of the device is a changeover contact from which either the NC contact or the NO contact can be connected to the device terminals via a plug-in jumper (X40). The assignment of the jumper to the contact type and the spatial arrangement of the jumper are described in the following section under the margin heading „Input/Output Board(s) C-I/O-1 and C-I/O-10“.

Nominal Currents

The input transformers of the devices are set to a nominal current of 1 A or 5 A with jumpers. The position of jumpers is determined according to the name-plate sticker. The assignment of the jumpers to the nominal current and the spatial layout of the jumpers are described in the following section under the margin heading „Board C-I/O-2“. All jumpers must be set for one nominal current, i.e. one jumper (X61 to X64) for each input transformer and additionally the common jumper X60..

Note

If nominal current ratings are changed exceptionally, then the new ratings must be registered in addresses 206 **CT SECONDARY** in the power system data (see Section 2.1.2.1).

Control Voltage for Binary Inputs

When the device is delivered from the factory, the binary inputs are set to operate with a voltage that corresponds to the rated DC voltage of the power supply. If the rated values differ from the power system control voltage, it may be necessary to change the switching threshold of the binary inputs.

A jumper position is changed to adjust the pickup voltage of a binary input. The assignment of the jumpers to the binary inputs and their physical arrangement are described below at margin headings „Input/Output Board(s) C-I/O-1 and C-I/O-10“ and „Input/Output Board(s) C-I/O-7“.

Note

If binary inputs are used for trip circuit supervision, note that two binary inputs (or a binary input and an equivalent resistor) are connected in series. The switching threshold must lie clearly below one half of the nominal control voltage.

Type of Contact for Output Relays

Some input/output boards can contain relays whose contacts can be set to have normally closed or normally open contacts. To do so, you have to move a jumper. The following sections under „Switching Elements on Printed Circuit Boards“ describe for which relays on which boards this is the case.

Exchanging Interfaces

The serial interfaces can only be replaced in devices designed for panel flush and cubicle mounting and for surface-mounted devices with a detached operator panel. The following section under margin heading „Replacing Interface Modules“ describes which interfaces can be exchanged, and how this is done.

Terminating of Bus-capable Interfaces

If the device is equipped with a serial RS485 interface or PROFIBUS, they must be terminated with resistors at the last device on the bus to ensure reliable data transmission. On the interface board, termination resistors are provided that can be connected via jumpers. The spatial arrangement of the jumpers on the PCB on the interface modules is described at margin headings „RS485 Interface“ and „Profibus Interface“. Both jumpers must always be plugged in identically.

The termination resistors are disabled on delivery.

Spare Parts

Spare parts may be the backup battery that maintains the data in the battery-buffered RAM when the voltage supply fails, and the miniature fuse of the internal power supply. Their spatial arrangement is shown in the figure of the processor board. The ratings of the fuse are printed on the board next to the fuse itself. When replacing the fuse, please observe the guidelines given in the SIPROTEC 4 System Description in the chapter „Maintenance“ and „Corrective Maintenance“.

3.1.2.2 Disassembly

Work on the Printed Circuit Boards

Note

It is assumed for the following steps that the device is not operative.

Caution!

Caution when changing jumper settings that affect nominal values of the device:

As a consequence, the order number (MLFB) and the ratings that are stated on the nameplate do no longer match the actual device properties.

If changes are necessary under exceptional circumstances, the changes should be clearly and fully noted on the device. Self-adhesive labels are provided for this which can be used as supplementary nameplates.

To perform work on the printed circuit boards, such as checking or moving switching elements or exchanging modules, proceed as follows:

- Prepare your workplace: Prepare a suitable underlay for Electrostatically Sensitive Devices (ESD). Also the following tools are required:
  - screwdriver with a 5 to 6 mm wide tip,
  - a crosstip screwdriver for Pz size 1,
  - a nut driver with 4.5 mm socket.
- Unfasten the screw-posts of the D-subminiature connector on the back panel at location „A“. This is not necessary if the device is designed for surface mounting.
- If the device features interfaces next to the interfaces at location „A“, the screws located diagonally to the interfaces must be removed. This is not necessary if the device is designed for surface mounting.
- Remove the covers on the front panel and loosen the screws which can then be accessed.
- Remove the front panel and place it carefully to the side.

Work on the Plug Connectors

Caution!

Mind electrostatic discharges:

Non-observance can result in minor personal injury or property damage.

When handling plug connectors, electrostatic discharges may emerge. These must be avoided by previously touching an earthed metal surface.

Do not plug or unplug interface connectors under voltage!

The order of the boards for housing size $^1/_2$ is shown in Figure 3-3 and that for housing size $^1/_1$ in Figure 3-4.

- Disconnect the plug connector of the ribbon cable between the front cover and the processor board C-CPU-1 (No. 1 in Figure 3-3) at the front cover side. Press the top latch of the plug connector up and the bottom latch down so that the plug connector of the ribbon cable is pressed out.
- Disconnect the ribbon cables between the processor board C-CPU-1 (No. 1 in Figure 3-4) and the input/output board I/O (according to order variant No. 2 to No. 5 in Figure 3-4).

- Remove the boards and put them on the earth mat to protect them from ESD damage. In the case of the device variant for panel surface mounting, please be aware of the fact that a certain amount of force is required in order to remove the C-CPU-1 board due to the existing plug connector.
- Check the jumpers according to Figures 3-5 to 3-8, 3-12 to 3-14 and the following information. Change or remove the jumpers if necessary.

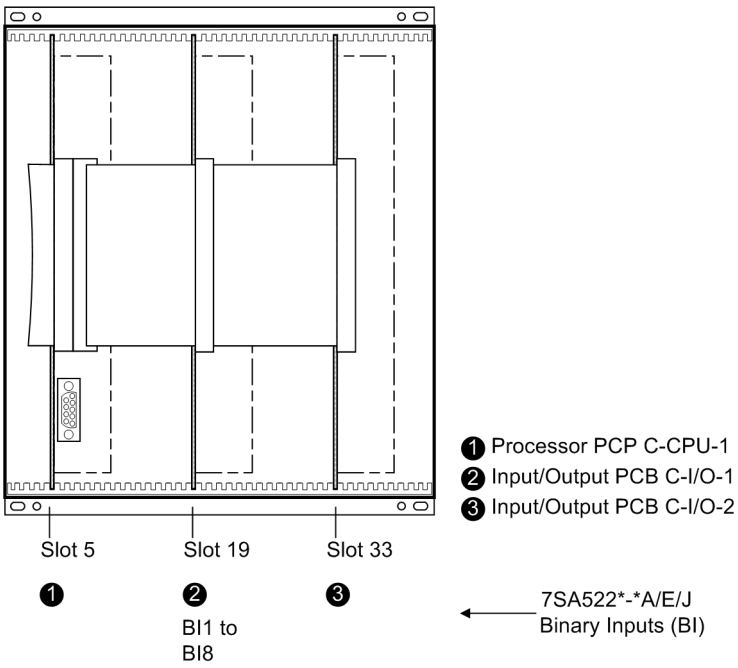

Figure 3-3 Front view with housing size $^1/_2$ after removal of the front cover (simplified and scaled down)

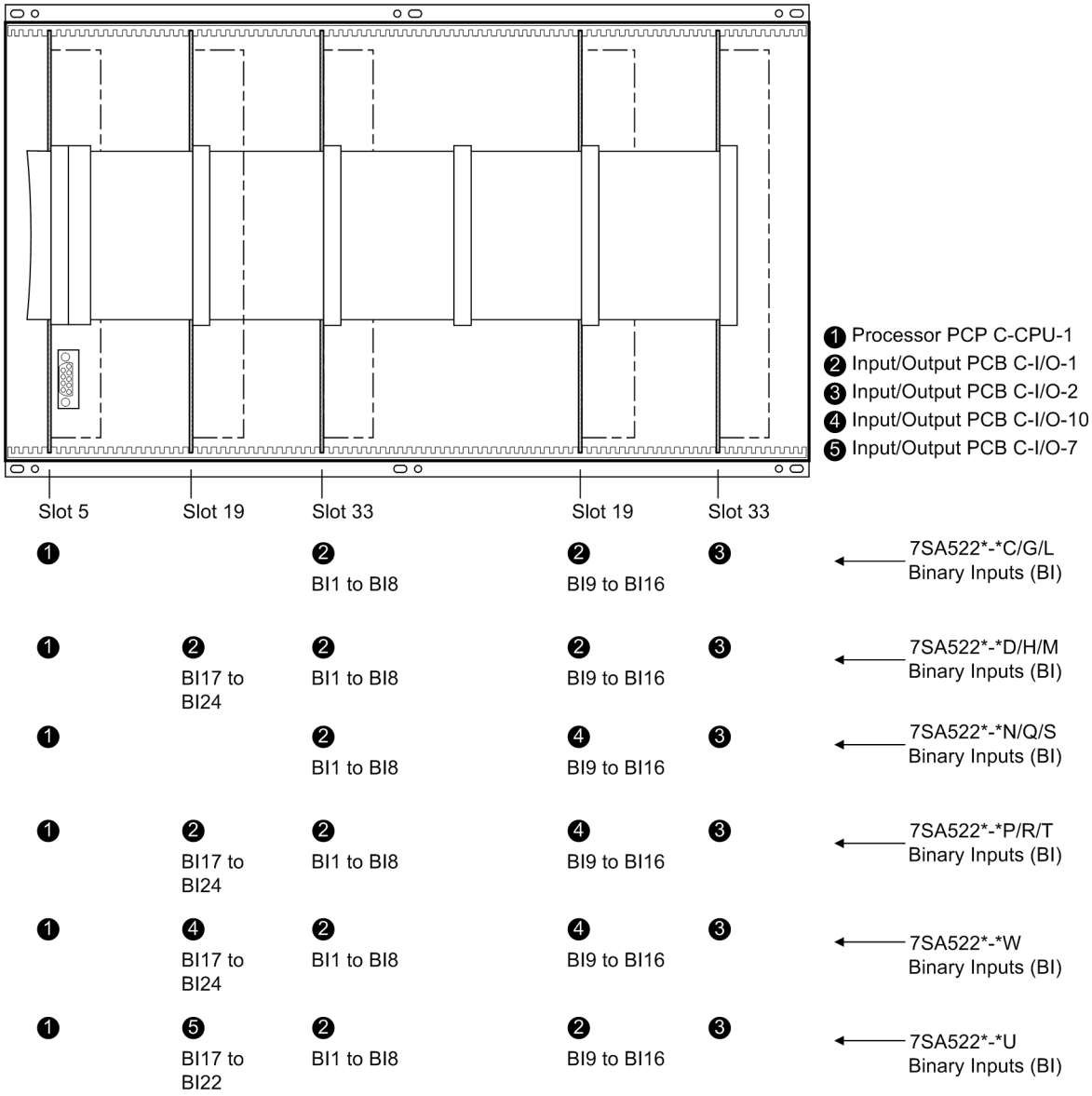

Figure 3-4 Front view with housing size $^1/_1$ after removal of the front cover (simplified and scaled down)

3.1.2.3 Switching Elements on Printed Circuit Boards

Input/Output Board(s) C-I/O-1 and C-I/O-10

The layout of the PCB for the input/output board C-I/O-1 is shown in Figure 3-5, that of the input/output board C-I/O-10 up to release 7SA522.../EE in Figure 3-6 and that of input/output board C-I/O-10 for release 7SA522.../FF and higher in Figure 3-7.

The power supply is situated

- On the input/output board C-I/O-1 (No. 2 in Figure 3-3, slot 19) for housing size $^1/_2$,
- On the input/output board C-I/O-1 (No. 2 in Figure 3-4, slot 33 left) for housing size $^1/_1$,

The preset nominal voltage of the integrated power supply is checked according to Table 3-2, the quiescent state of the life contact is checked according to Table 3-3.

Table 3-2 Jumper settings of the nominal voltage of the integrated **Power Supply** of the input/output board C-I/O-1.

Jumper	Nominal Voltage		
	60/110/125 VDC	**110/125/220/250 VDC 115 VAC**	**24/48 VDC**
X51	1-2	2-3	Jumpers X51 to X53 are not used
X52	1-2 and 3-4	2-3	
X53	1-2	2-3	
	interchangeable		cannot be changed
Fuse	T2H250V		T4H250V

Table 3-3 Jumper position of the quiescent state of the **Life contact** on the C-I/O-1 input/output board

Jumper	Open in quiescent state (NO)	Closed in quiescent state (NC)	Presetting
X	1-2	2-3	2-3

Depending on the device version the contacts of some binary outputs can be changed from normally open to normally closed (see Appendix, under section A.2).

- In versions 7SA522*-***D/H/M** (housing size $^1/_1$ with 32 binary outputs) this is valid for the binary outputs BO16 and BO24 (Figure 3-4, slot 19 left and right);
- In versions 7SA522*-***C**/**G**/**L** (housing size $^1/_1$ with 24 binary outputs) this is valid for the binary output BO16 (Figure 3-4, slot 19 right);
- In versions 7SA522*-***P**/**R**/**T** (housing size $^1/_1$ with 32 binary outputs and command acceleration) this is valid for the binary output BO24 (Figure 3-4, slot 19 left);
- In version 7SA522*-***U** (housing size $^1/_1$ with 44 binary outputs and command acceleration) this is valid for the binary output BO16 (Figure 3-4, slot 19 right);

Table 3-4 shows the jumper settings for the contact mode.

Table 3-4 Jumper settings for contact mode of the binary outputs BO16 and BO24 on the input/output board C–I/O-1

Device 7SA522*-*	Module	for	Jumper	Open in quiescent state (NO)	Closed in quiescent state (NC)	Presetting
D/H/M	Slot 19 left side	BO 16	X40	1-2	2-3	1-2
	Slot 19 right side	BO 24	X40	1-2	2-3	1-2
C/G/L/U	Slot 19 right side	BO 16	X40	1-2	2-3	1-2
P/R/T	Slot 19 left side	BO 24	X40	1-2	2-3	1-2

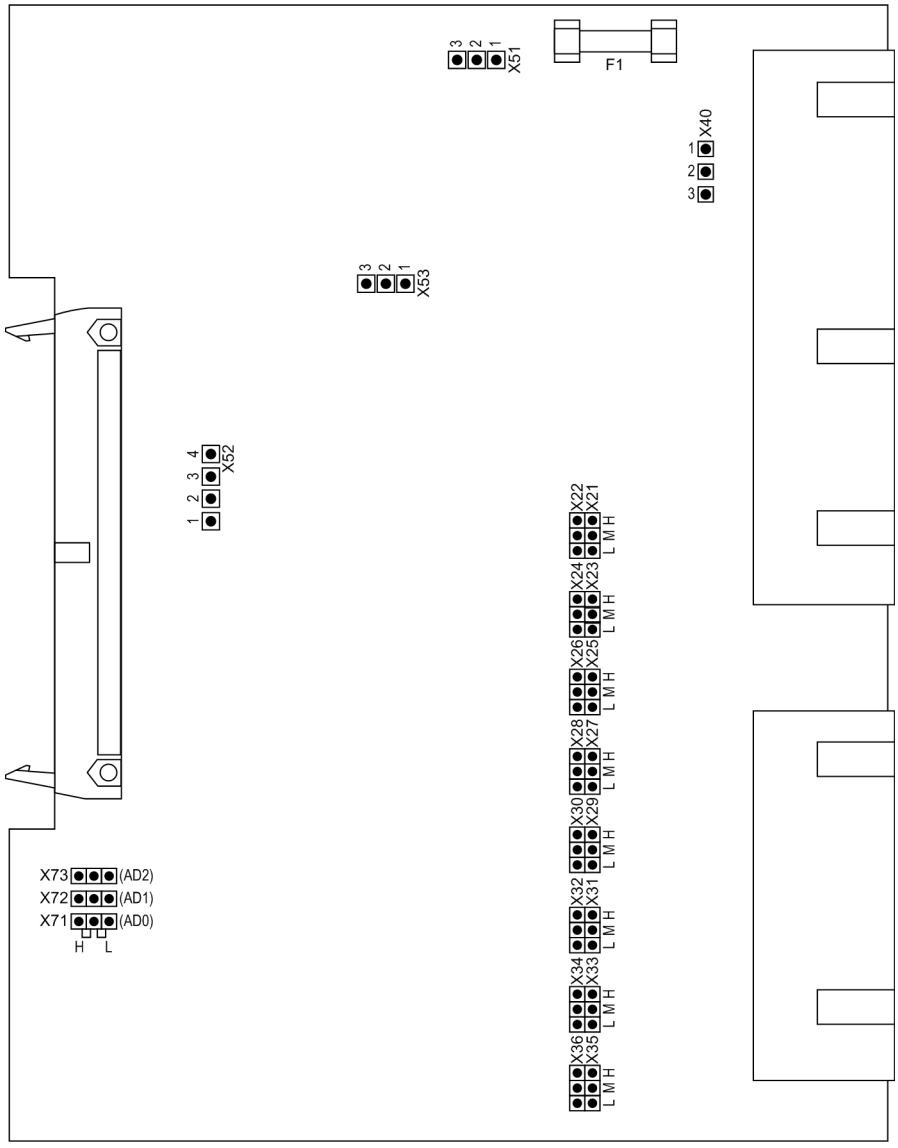

Figure 3-5 Input/output board C-I/O-1 with representation of the jumper settings required for checking configuration settings

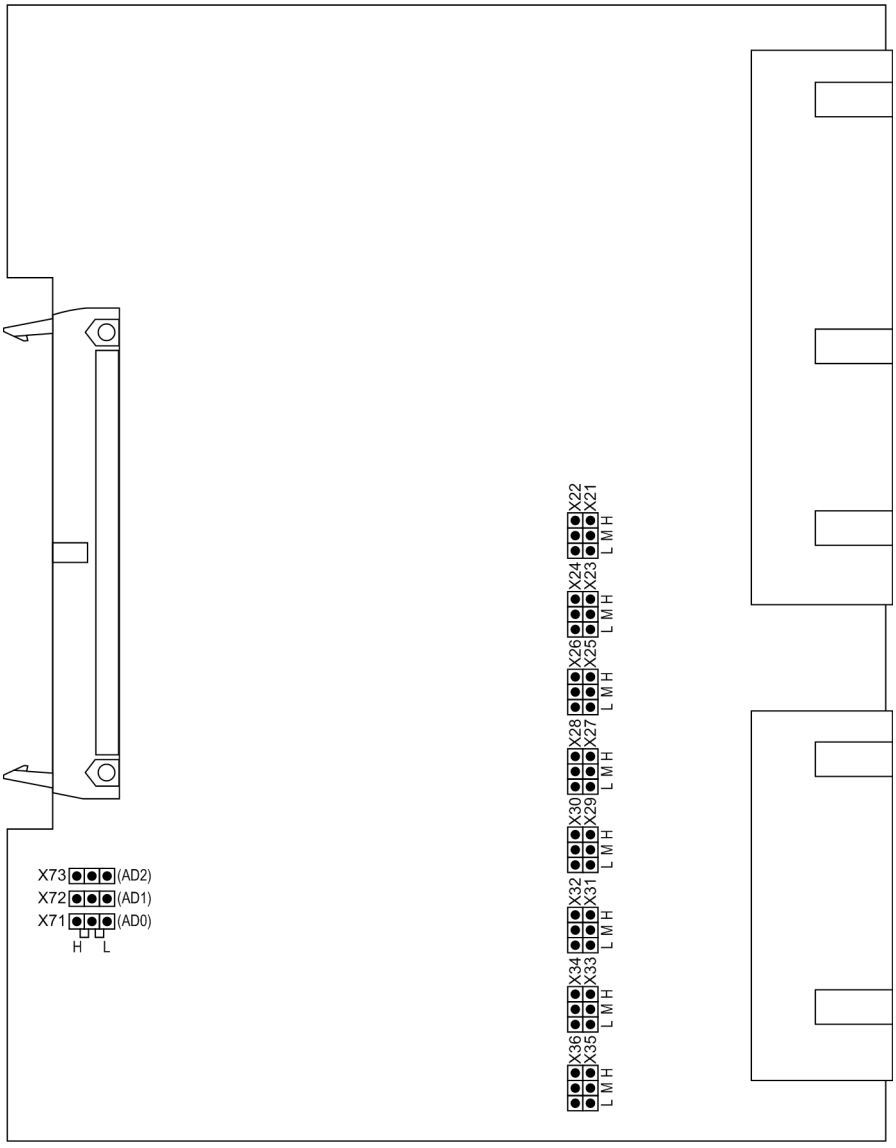

Figure 3-6 Input/output board C-I/O-10 up to release 7SA522 .../EE with representation of the jumper settings required for checking configuration settings

Check of the control voltages of the binary inputs:

BI1 to BI8 (with housing size $^1/_2$) according to Table 3-5.

BI1 to BI24 (with housing size $^1/_1$ depending on the version) according to Table 3-6.

Table 3-5 Jumper settings of the **Control Voltages** of the binary inputs BI1 to BI8 on the input/output board C-I/O-1 with housing size $^1/_2$

Binary Inputs slot 19	Jumper	17 V Threshold [1]	73 V Threshold [2]	154 V Threshold [3]
BI1	X21/X22	L	M	H
BI2	X23/X24	L	M	H
BI3	X25/X26	L	M	H
BI4	X27/X28	L	M	H
BI5	X29/X30	L	M	H
BI6	X31/X32	L	M	H
BI7	X33/X34	L	M	H
BI8	X35/X36	L	M	H

1) Factory settings for devices with power supply voltages of 24 VDC to 125 VDC
2) Factory settings for devices with rated power supply voltages of 110 VDC to 250 VDC and 115 VAC
3) Factory settings for devices with power supply voltages of 220 VDC to 250 VDC and 115 VAC

Table 3-6 Jumper settings of the **Control Voltages** of the binary inputs BI1 to BI24 on the input/output board C-I/O-1 or C-I/O-10 with housing size $^1/_1$

Binary Inputs			Jumper	17 V Threshold [1]	73 V Threshold [2]	154 V Threshold [3]
Slot 33 left side	Slot 19 right side	Slot 19 left side				
BI1	BI9	BI17	X21/X22	L	M	H
BI2	BI10	BI18	X23/X24	L	M	H
BI3	BI11	BI19	X25/X26	L	M	H
BI4	BI12	BI20	X27/X28	L	M	H
BI5	BI13	BI21	X29/X30	L	M	H
BI6	BI14	BI22	X31/X32	L	M	H
BI7	BI15	BI23	X33/X34	L	M	H
BI8	BI16	BI24	X35/X36	L	M	H

1) Factory settings for devices with rated power supply voltages of 24 VDC to 125 VDC
2) Factory settings for devices with power supply voltages of 110 VDC to 250 VDC and 115 VAC
3) Factory settings for devices with rated power supply voltages of 220 VDC to 250 VDC and 115 VAC

Table 3-7 Jumper settings of the **PCB Address** of the input/output board C-I/O-1 or C-I/O-10 with housing size $^1/_1$

Jumper	Insert location	
	Slot 19 left side	Slot 19 right side
X71	H	L
X72	L	L
X73	H	H

Input/Output Board C-I/O-10 Release ../7SA522 .../FF or Higher

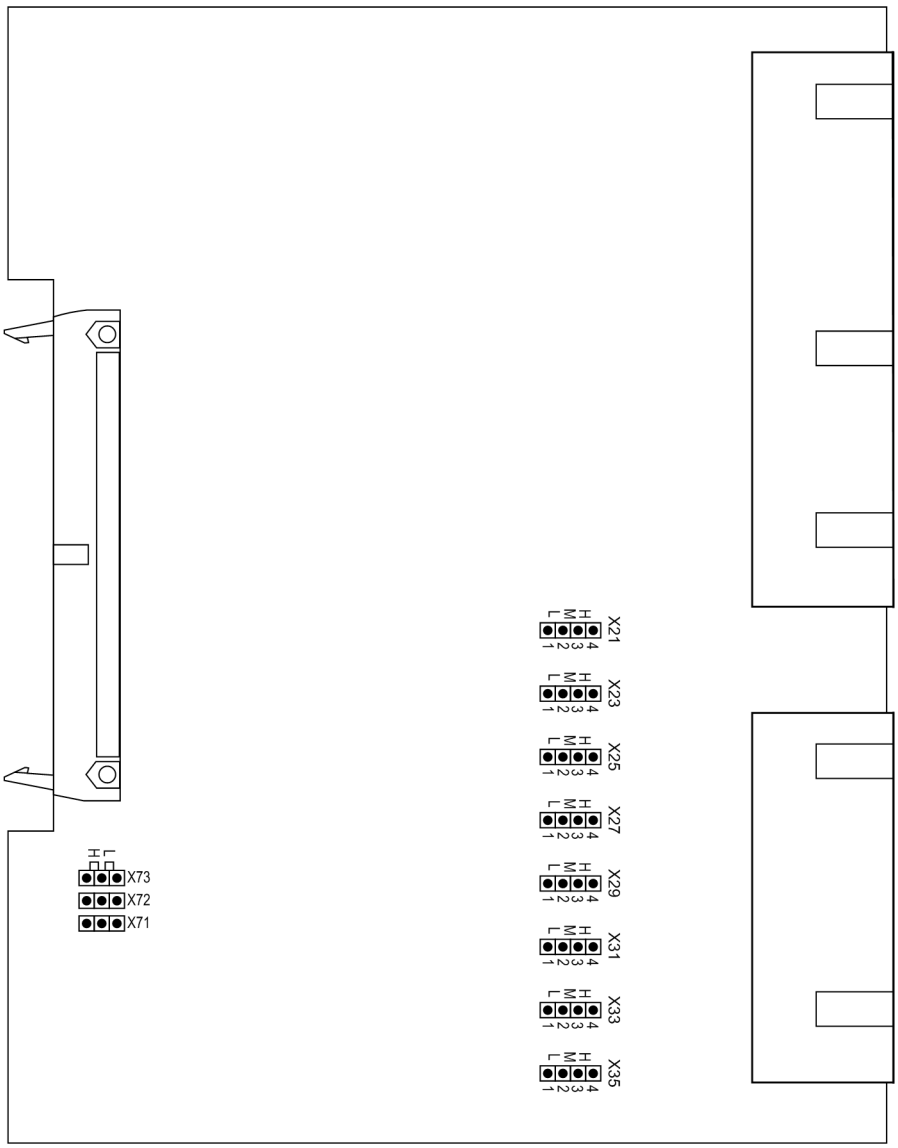

Figure 3-7 Input/output board C-I/O-10 release 7SA522.../FF or higher, with representation of jumper settings required for checking configuration settings

Table 3-8 Jumper settings of the **Control Voltages** of the binary inputs BI1 to BI24 on the input/output board C-I/O-10 for release 7SA522 .../FF and higher with housing size $^1/_1$

Binary Inputs			Jumper	17 V Threshold [1]	73 V Threshold [2]	154 V Threshold [3]
Slot 33 left side	Slot 19 right side	Slot 19 left side				
BI1	BI9	BI17	X21	L	M	H
BI2	BI10	BI18	X23	L	M	H
BI3	BI11	BI19	X25	L	M	H
BI4	BI12	BI20	X27	L	M	H
BI5	BI13	BI21	X29	L	M	H
BI6	BI14	BI22	X31	L	M	H
BI7	BI15	BI23	X33	L	M	H
BI8	BI16	BI24	X35	L	M	H

[1] Factory settings for devices with rated power supply voltages of 24 VDC to 125 VDC
[2] Factory settings for devices with power supply voltages of 110 VDC to 250 VDC and 115 VAC
[3] Factory settings for devices with power supply voltages of 220 VDC to 250 VDC and 115 VAC

Table 3-9 Jumper setting of the **PCB address** of the input/output board C-I/O-10 for release 7SA522 .../FF and higher with housing size $^1/_1$

Jumper	Insert location	
	Slot 19 left side	Slot 19 right side
X71	H	L
X72	L	L
X73	H	H

Input/Output Board C-I/O-2 up to Release 7SA522 .../EE

There are two different releases of the input/output board C-I/O-2 available. For devices up to the release 7SA522.../EE, the layout of the printed circuit board is shown in Figure 3-8, for devices of release 7SA522.../FF and higher, it is shown in Figure 3-9.

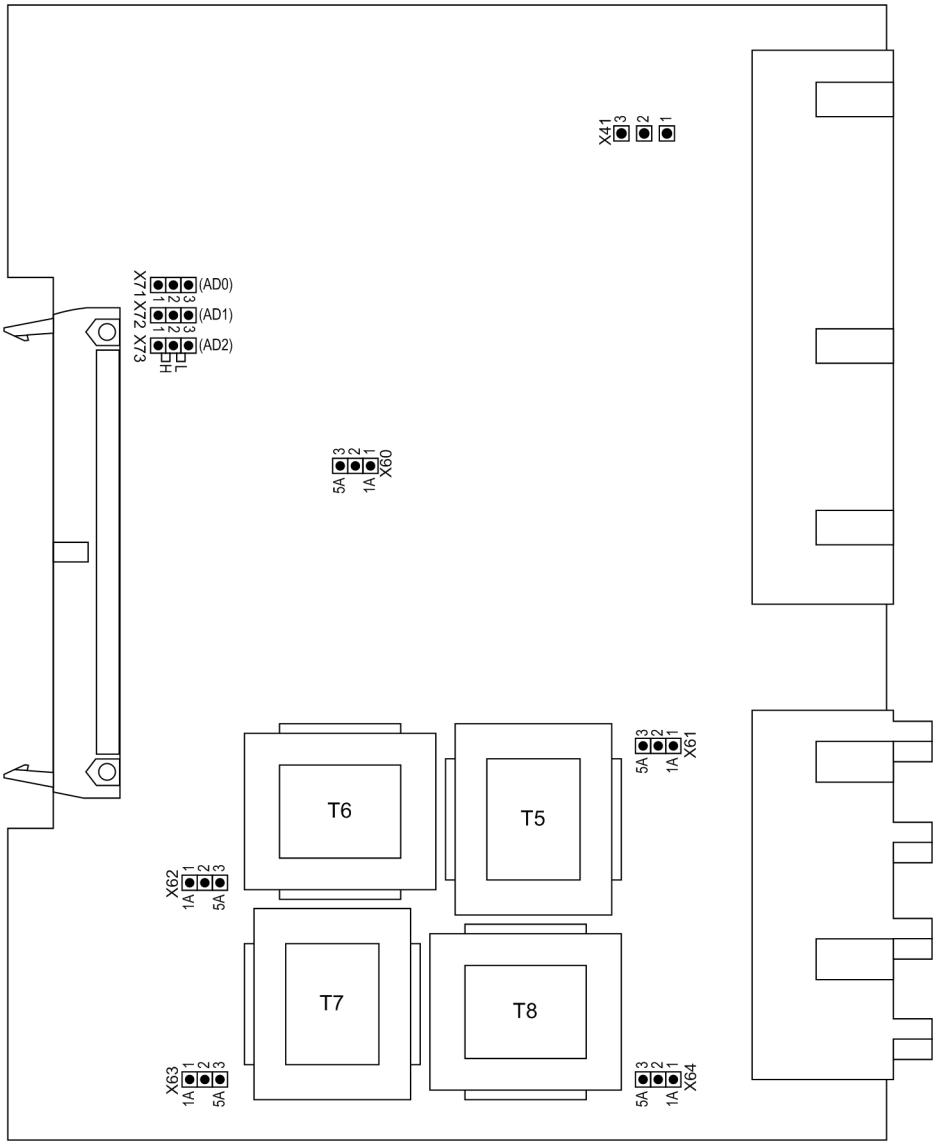

Figure 3-8 Input/output board C-I/O-2 up to release 7SA522.../EE, with representation of the jumper settings required for checking configuration settings

The contact type of binary output BO13 can be changed from normally open to normally closed (see also overview diagrams in section A.2 of the Appendix).

with housing size $^1/_2$: No. 3 in Figure 3-3, slot 33

with housing size $^1/_1$: No. 3 in Figure 3-4, slot 33 right.

Table 3-10 Jumper setting for contact type of binary output BO13

Jumper	Open in quiescent state (NO)	Closed in quiescent state (NC)	Presetting
X41	1-2	2-3	1-2

The set nominal current of the current input transformers are to be checked on the input/output board C-I/O-2. All jumpers must be set for one nominal current, i.e. respectively one jumper (X61 to X64) for each input transformer and additionally the common jumper X60. **But**: In the version with sensitive earth fault current input (input transformer T8) there is no jumper X64.

Jumpers X71, X72 and X73 on the input/output board C-I/O-2 are used to set the bus address and must not be changed. The following table shows the preset jumper positions.

Mounting location:

with housing size $^1/_2$: No. 3 in Figure 3-3, slot 33

with housing size $^1/_1$: No. 3 in Figure 3-4, slot 33 right.

Table 3-11 Jumper settings of the **PCB Address** of the input/output board C-I/O-2

Jumper	Factory setting
X71	1-2 (H)
X72	1-2 (H)
X73	2-3 (L)

This board is available in two configuration variants:

- Variant with normal earth fault detection, PCB number C53207-A324-B50-*
- Variant with sensitive earth fault detection, PCB number C53207-A324-B60-*

A table imprinted on the printed-circuit board indicates the respective PCB number.

The nominal current or measuring range settings are checked on the input/output board C-I/O-2.

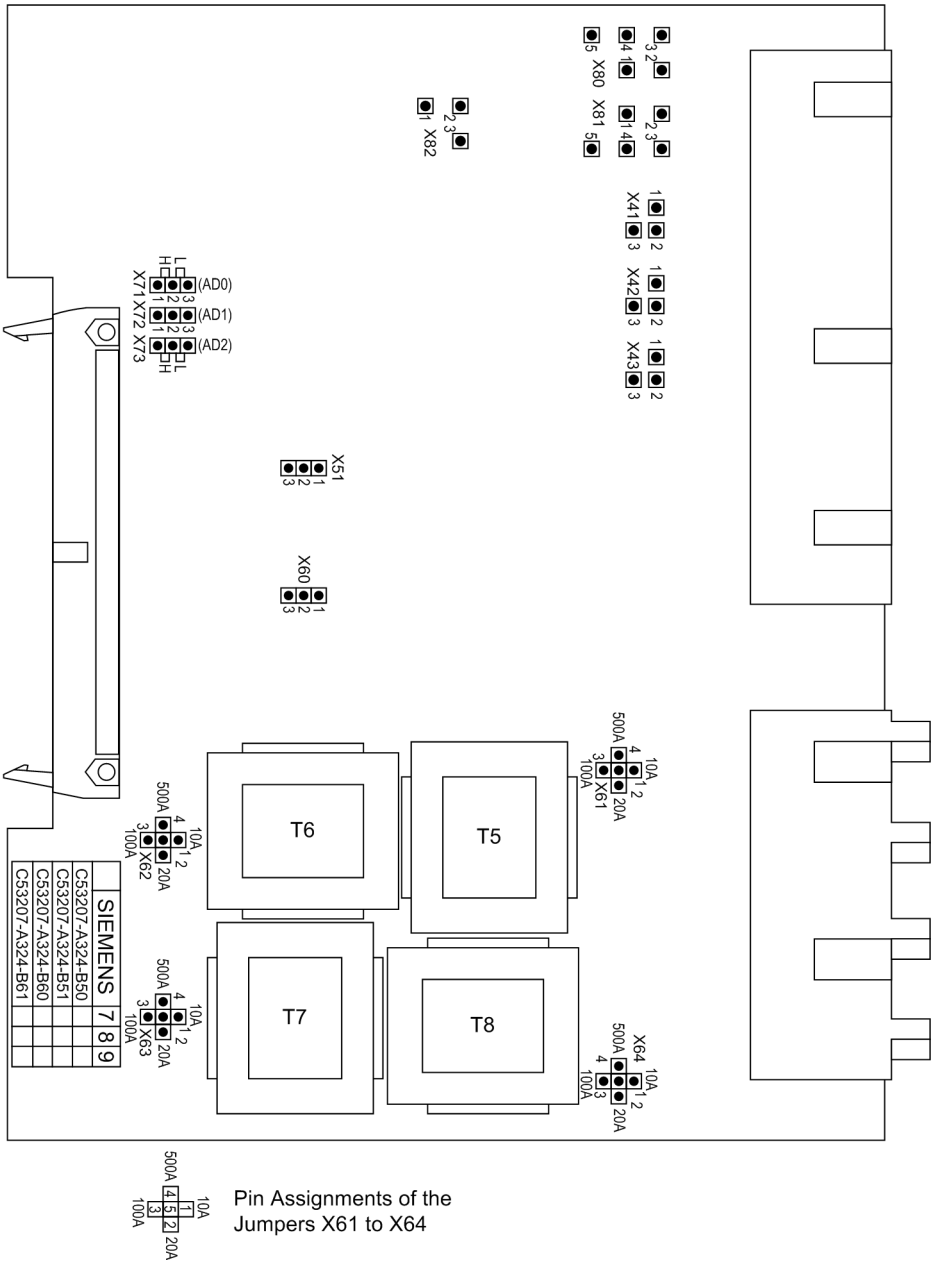

Figure 3-9 Input/output board C-I/O-2 release 7SA522.../FF or higher, with representation of the jumper settings required for checking configuration settings

Table 3-12 Jumper setting for **nominal current** or **measuring range**

Jumper	Nominal current 1 A Measuring range 100 A	Nominal current 5 A Measuring range 500 A
X51	1-2	1-2
X60	1-2	2-3
X61	3-5	4-5
X62	3-5	4-5
X63	3-5	4-5
X64[1)]	3-5	4-5

1) Not for variant with sensitive earth fault detection

Contacts of relays for binary outputs BO13, BO14 and BO15 can be configured as normally open or normally closed (see also General Diagrams in the Appendix).

Table 3-13 Jumper setting for the **contact type** of the relays for BO13, BO14 and BO15

For	Jumper	Open in quiescent state (NO) [1)]	Closed in quiescent state (NC)
BO13	X41	1-2	2-3
BO14	X42	1-2	2-3
BO15	X43	1-2	2-3

1) Factory setting

The relays for the binary outputs BO8 to BO12 can be connected to common potential, or configured individually for BO8, BO11 and BO12 (BO9 and BO10 are without function in this context) (see also General Diagrams in the Appendix).

Table 3-14 Jumper settings for the configuration of the **common potential** of BO8 through BA11 or for configuration of BO8, BO11 and BO12 as **single relays**

Jumper	BO8 through BO12 connected to common potential [1)]	BO8, BO11, BO12 configured as single relays (BO9, BO10 without function)
X80	1-2, 3-4	2-3, 4-5
X81	1-2, 3-4	2-3, 4-5
X82	2-3	1-2

1) Factory Setting

Jumpers X71, X72 and X73 serve for setting the bus address. Their position must not be changed. The following table shows the preset jumper positions.

Table 3-15 Jumper setting of the **module addresses** of the input/output board C-I/O-2

Jumper	Factory setting
X71	1-2 (H)
X72	1-2 (H)
X73	2-3 (L)

Input/output boardC-I/O-7

The PCB layout for the input/output board C-I/O-7 is shown in Figure 3-10.

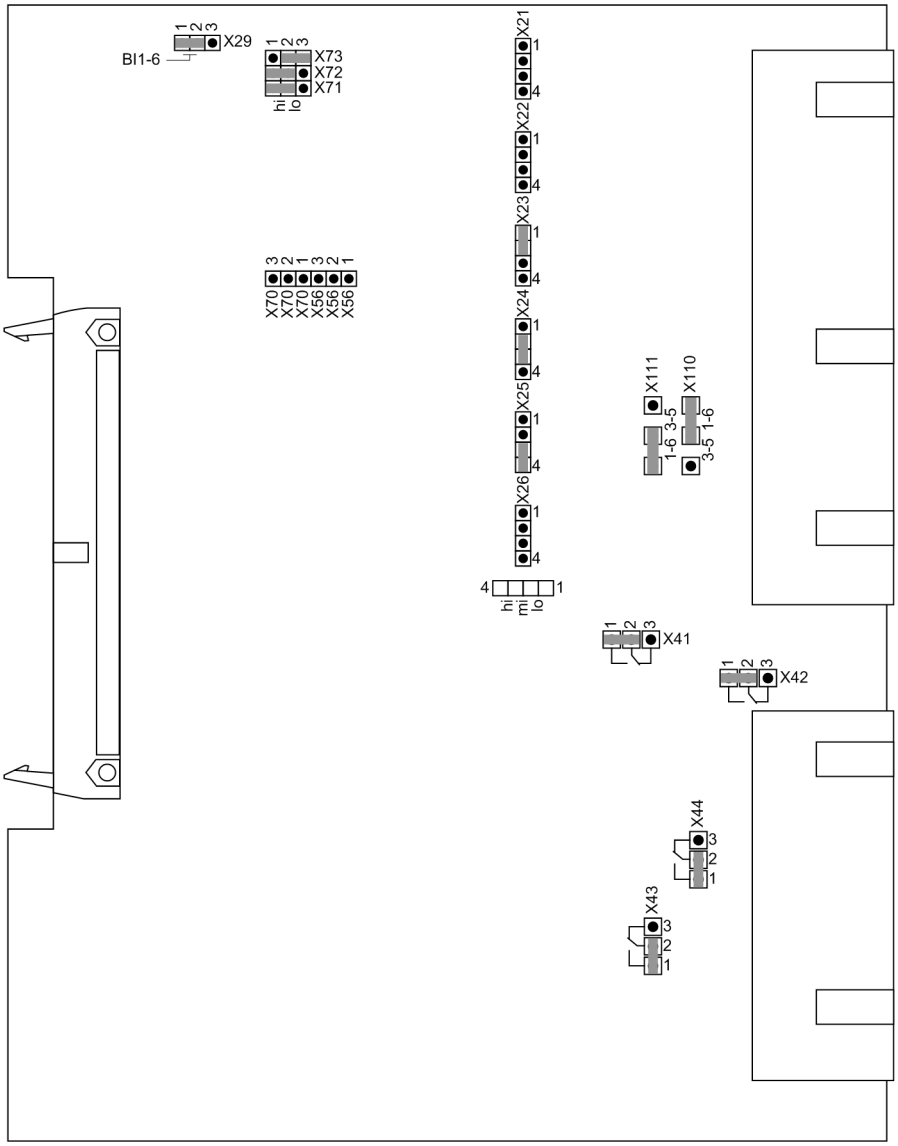

Figure 3-10 Input/output board C-I/O-7 with representation of the jumper settings required for checking the configuration settings

Depending on the device version the contacts of some binary outputs can be changed from normally open to normally closed (see Appendix, under Section A.2).

- In version 7SA522*-***U** (housing size **1/1** with 44 binary outputs) this is valid for the binary outputs BO30, BO31, BO41 and BO42 (Figure 3-4, slot 19 left).

Table 3-16 shows the jumper settings for the contact mode.

Table 3-16 Jumper setting for the **Contact Mode** of the relays for BO30, BO31, BO41 and BO42 on the input/output board C-I/O-7 with housing size $^1/_1$

Device 7SA522*-*	Printed Circuit Board	For	Jumper	Quiescent State Open (NO)	Quiescent State Closed (NC)	Factory Setting
U	Slot 19 Left	BO30	X41	1-2	2-3	1-2
		BO31	X42	1-2	2-3	1-2
		BO41	X43	1-2	2-3	1-2
		BO42	X44	1-2	2-3	1-2

Depending on the jumper setting there are 5 or 6 inputs available on this board. 6 binary inputs (BI17-BI22), connected to common potential, or 5 binary inputs divided into 1 x 2 binary inputs (BI17-BI18), connected to common potential and 1 x 3 binary inputs (BI19-BI21), connected to common potential. Please note that the relationship between jumpers X110, X111 and X29 must always be correct.

Table 3-17 Number of inputs

Jumper	5 Inputs 1 x 2 and 1 x 3 Binary Inputs, Connected to Common Potential	6 Inputs 1 x 6 Binary Inputs, Connected to Common Potential	Factory Setting
X110	1-2	2-3	2-3
X111	2-3	1-2	1-2
X29	2-3	1-2	1-2

Check of the control voltages of the binary inputs:

BI17 to BI22 (with housing size $^1/_1$ slot 19 left) according to Table3-5.

Table 3-18 Jumper settings of **Pickup Voltages** of the binary inputs BI17 to BI22 on the input/output board C-I/O-7

Binary Inputs	Jumper	17 V Threshold [1]	73 V Threshold [2]	154 V Threshold [3]
BI17	X21	L	M	H
BI18	X22	L	M	H
BI19	X23	L	M	H
BI20	X24	L	M	H
BI21	X25	L	M	H
BI22	X26	L	M	H

[1] Factory settings for devices with rated power supply voltages of 24 VDC to 125 VDC
[2] Factory settings for devices with rated power supply voltages of 110 VDC to 250 VDC and 115 VAC
[3] Factory settings for devices with rated power supply voltages of 220 VDC to 250 VDC and 115 VAC

Jumpers X71, X72 and X73 on the input/output board C-I/O-7 are used to set the bus address and must not be changed. The following table lists the jumper presettings.

The mounting location of the board is shown in Figure 3-4.

Table 3-19 Jumper settings of the **Board Address** of the input/output board C-I/O-7 (for housing size $^1/_1$ slot 19 left)

Jumper	Mounting Location 19
A0 X71	1-2 (H)
A1 X72	2-3 (L)
A2 X73	1-2 (H)

3.1.2.4 Interface Modules

Exchanging Interface Modules

The interface modules are located on the C-CPU-1 board. Figure 3-11 shows the PCB with the arranged modules.

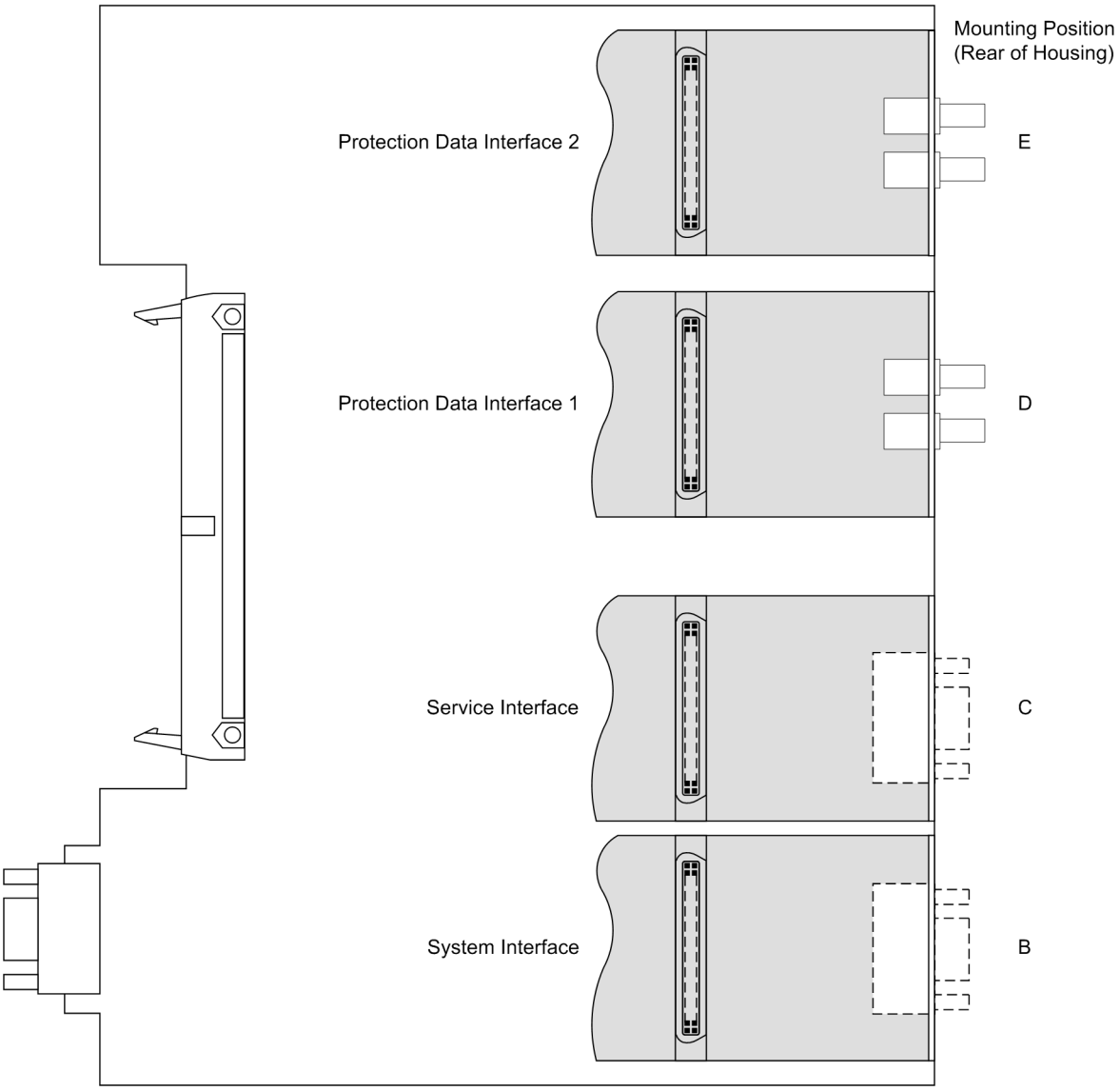

Figure 3-11 C-CPU-1 board with interface modules

Please note the following:

- The interface modules can only be exchanged in devices in flush-mounted housing. Interface modules for devices with surface mounting housing must be retrofitted in our manufacturing centre.
- Use only interface modules that can be ordered ex-factory via the ordering code (see also Appendix, Section A.1).
- You may have to ensure the termination of the interfaces featuring bus capability according to the margin heading „RS485 Interface“.

Table 3-20 Exchangeable interface modules

Interface	Mounting location / port	Exchange module
System interface	B	Only interface modules that can be ordered in our facilities via the order key (see also Appendix, Section A.1)
Service interface	C	
Protection data interface 1	D	FO5; FO6;; FO17 to FO19; FO30
Protection data interface 2	E	

The order numbers of the exchange modules can be found in the Appendix in Section A.1, Accessories.

RS232 Interface

Interface RS232 can be modified to interface RS485 and vice versa (see Figures 3-12 and 3-13).

Figure 3-11 shows the C-CPU-1 PCB with the layout of the modules.

The following figure shows the location of the jumpers of interface RS232 on the interface module.

Surface-mounted devices with fibre optics connection have their fibre optics module fitted in the console housing on the case bottom. The fibre optics module is controlled via an RS232 interface module at the associated CPU interface slot. For this application type the jumpers X12 and X13 on the RS232 module are plugged in position 2-3.

Jumper	Terminating Resistors Disconnected
X3	1-2 *)
X4	1-2 *)

*) Default Setting

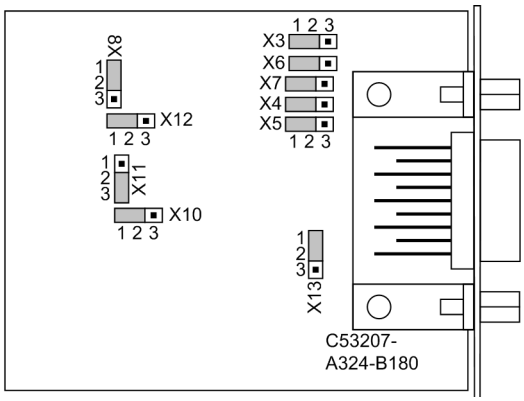

Figure 3-12 Location of the jumpers for configuration of RS232

Terminating resistors are not required for RS232. They are disconnected.

Jumper X11 is used to activate the flow control which is important for the modem communication.

Table 3-21 Jumper setting for **CTS** (**C**lear **T**o **S**end, flow control) on the interface module

Jumper	/CTS from Interface RS232	/CTS controlled by /RTS
X11	1-2	2-3 [1)]

[1)] Default Setting

Jumper setting 2-3: The connection to the modem is usually established with a star coupler or fibre-optic converter. Therefore the modem control signals according to RS232 standard DIN 66020 are not available. Modem signals are not required since the connection to the SIPROTEC 4 devices is always operated in the half-duplex mode. Please use the connection cable with order number 7XV5100-4.

Jumper setting 1-2: This setting makes the modem signals available, i. e. for a direct RS232-connection between the SIPROTEC 4 device and the modem this setting can be selected optionally. We recommend to use a standard RS232 modem connection cable (converter 9-pin to 25-pin).

Note

For a direct connection to DIGSI with interface RS232 jumper X11 must be plugged in position 2-3.

RS485 Interface

The following figure shows the location of the jumpers of interface RS485 on the interface module.

Interface RS485 can be modified to interface RS232 and vice versa, according to Figure 3-12.

Jumper	Terminating Resistors	
	Connected	Disconnected
X3	2-3	1-2 *)
X4	2-3	1-2 *)

*) Default Setting

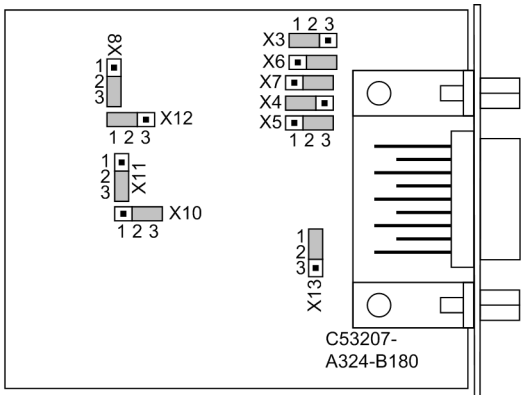

Figure 3-13 Position of terminating resistors and the plug-in jumpers for configuration of the RS485 interface

Profibus/DNP Interface

Jumper	Terminating Resistors	
	Connected	Disconnected
X3	1-2	2-3 *)
X4	1-2	2-3 *)

*) Default Setting

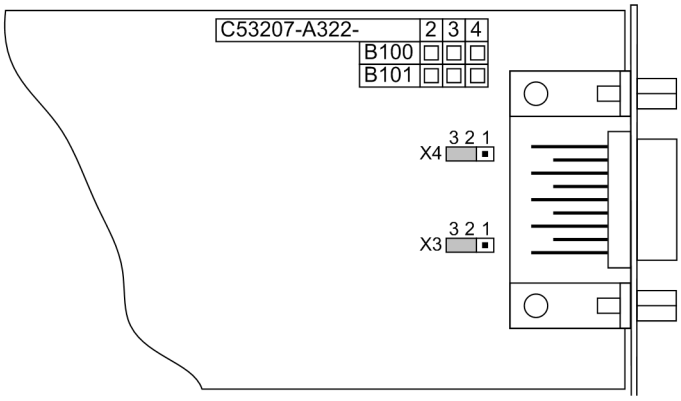

Figure 3-14 Location of the jumpers for configuring the terminating resistors of the active electrical module (PROFIBUS and DNP 3.0 interface)

EN100 Ethernet Module (IEC 61850)

The Ethernet interface module has no jumpers. No hardware modifications are required to use it.

RS485 Termination

For bus-capable interfaces, a termination is necessary at the respective last device on the bus, i.e. termination resistors must be connected. On the 7SA522 device, this concerns the variants with RS485 or PROFIBUS7/DNP interfaces.

The terminating resistors are located on the RS485 or Profibus interface module that is mounted to the C-CPU-1 board (serial no. 1 in Figures 3-3 and 3-4).

Figure 3-11 shows the C-CPU-1 PCB with the layout of the boards.

The board with configuration as RS485 interface is shown in Figure 3-13, the module for the PROFIBUS interface in Figure 3-14.

For the configuration of the terminating resistors both jumpers have to be plugged in the same way.

On delivery the jumpers are set so that the terminating resistors are disconnected.

The terminating resistors can also be connected externally (e.g. to the connection module), see Figure 3-15. In this case, the terminating resistors located on the RS485 or PROFIBUS interface module must be switched off.

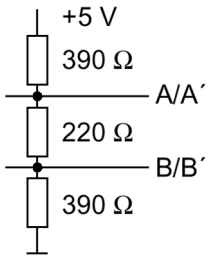

Figure 3-15 Termination of the RS485 Interface (External)

3.1.2.5 Reassembly

The assembly of the device is done in the following steps:

- Insert the boards carefully in the housing. The mounting locations of the boards are shown in Figures 3-3 and 3-4. For the model of the device designed for surface mounting, use the metal lever to insert the C-CPU-1 board. Installation is easier with the lever.
- First plug in the plug connectors of the ribbon cable onto the input/output boards I/O and then onto the processor board C-CPU-1. Be careful that no connector pins are bent! Don't use force!
- Connect the plug connectors of the ribbon cable between processor board C-CPU-1 and the front panel to the front panel plug connector.
- Press plug connector interlocks together.
- Replace the front panel and screw it again tightly to the housing.
- Replace the covers again.
- Re-fasten the interfaces on the rear of the device housing. This is not necessary if the device is designed for surface mounting.

3.1.3 Mounting

3.1.3.1 Panel Flush Mounting

Depending on the version, the device housing can be $^1/_2$ or $^1/_1$. With housing size $^1/_2$, there are four covers and four holes, as shown in Figure 3-16. There are six covers and six holes for the full housing size $^1/_1$, as indicated in Figure 3-17.

- Remove the 4 covers at the corners of the front cover, for housing size $^1/_1$ the two covers located centrally at the top and bottom also have to be removed. This gives access to the 4 or 6 slots in the mounting bracket.
- Insert the device into the panel cut-out and fasten it with four or six screws. For dimensions refer to Section 4.23.
- Put the four or six covers back into place.
- Connect a solid low-impedance protective earthing at the rear of the device with at least one M4 screw. The cross-section of the earth wire must be equal to the cross-section of any other control conductor connected to the device. The cross-section of the earth wire must be at least 2.5 mm ^{2}.
- Connections are realized via the plug terminals or screw terminals on the rear side of the device according to the circuit diagram.

  When using screwed connections with forked lugs or direct connection, before inserting wires the screws must be tightened so that the screw heads are flush with the outer edge of the connection block.

  A ring lug must be centred in the connection chamber, in such a way that the screw thread fits in the hole of the lug.

  The SIPROTEC 4 System Description has pertinent information regarding wire size, lugs, bending radii, etc. Installation notes are also given in the brief reference booklet attached to the device.

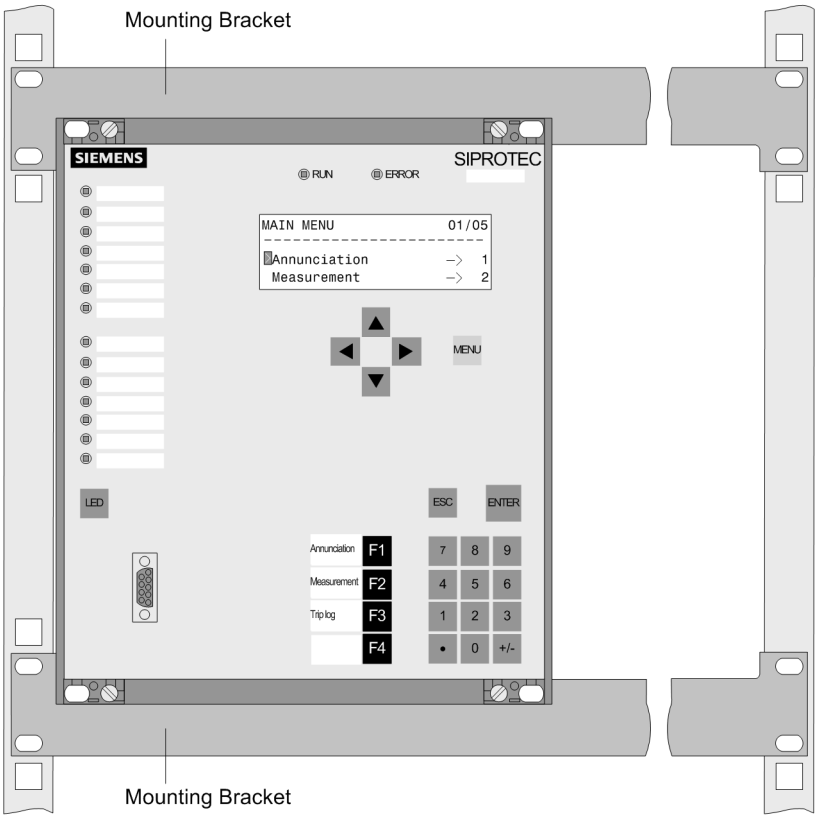

Figure 3-16 Example of panel flush mounting of a device (housing size $^1/_2$)

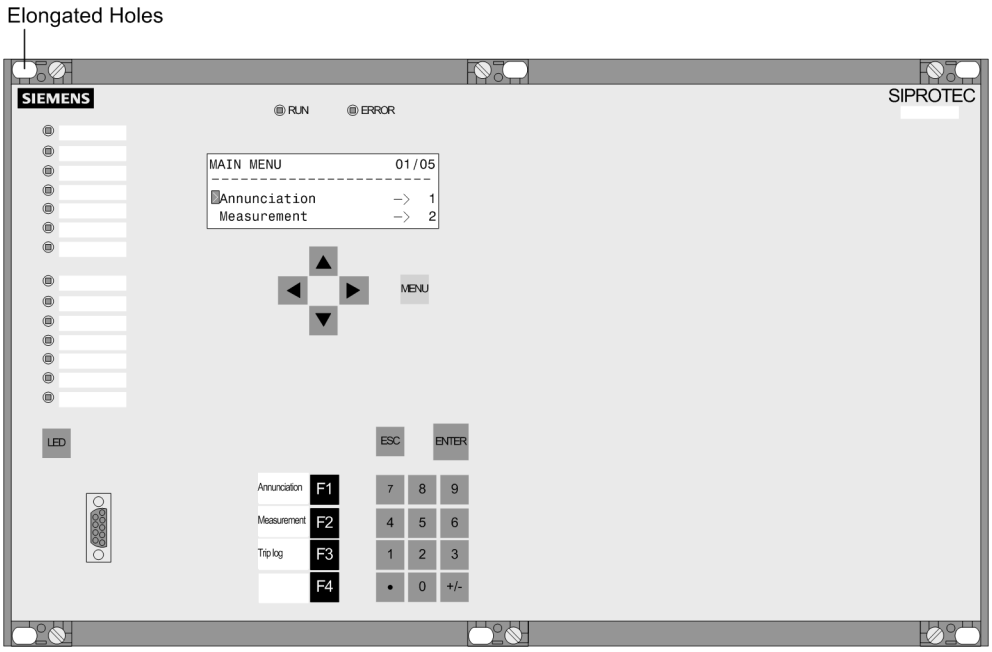

Figure 3-17 Panel flush mounting of a device (housing size $^1/_1$)

3.1.3.2 Rack and Cubicle Mounting

To install the device in a rack or cubicle, a pair of mounting rails; one for top, one for bottom are required. The ordering codes are stated in Appendix, Section A.1

For the $^1/_2$ housing size (Figure 3-18), there are four covers and four holes. For the $^1/_1$ housing size (Figure 3-19) there are six covers and six holes.

- Screw on loosely the two angle brackets in the rack or cabinet, each with four screws.
- Remove the 4 covers at the corners of the front cover, for housing size $^1/_1$ the two covers located centrally at the top and bottom also have to be removed. This gives access to the 4 or 6 slots in the mounting bracket.
- Fasten the device to the mounting brackets with four or six screws.
- Put the four or six covers back into place.
- Tighten fast the eight screws of the angle brackets in the rack or cabinet.
- Connect a solid low-impedance protective earthing at the rear of the device with at least one M4 screw. The cross-section of the earth wire must be equal to the cross-section of any other control conductor connected to the device. The cross-section of the earth wire must be at least 2.5 mm ^{2}.
- Make the connections on the device's back panel using the plug or screw terminals as shown in the wiring diagram.

  For screw connections with forked lugs or direct connection, before inserting wires the screws must be tightened so that the screw heads are flush with the outer edge of the connection block.

  A ring lug must be centred in the connection chamber so that the screw thread fits in the hole of the lug.

  The SIPROTEC 4 System Description has pertinent information regarding wire size, lugs, bending radii, etc. Installation notes are also given in the brief reference booklet attached to the device.

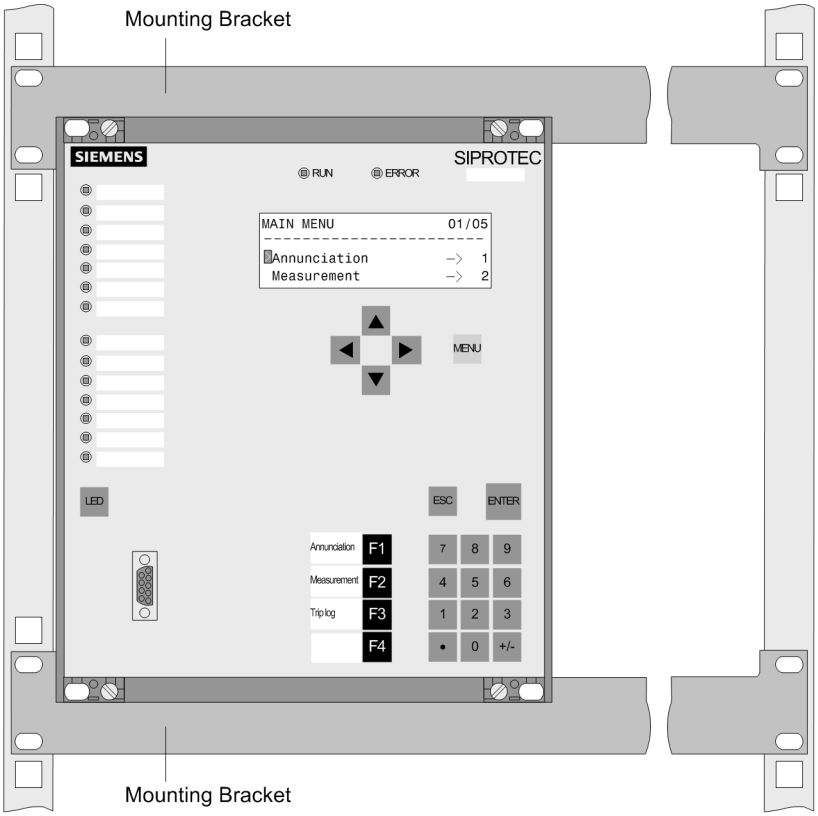

Figure 3-18 Mounting device in a rack or cubicle (housing size $^1/_2$), as an example

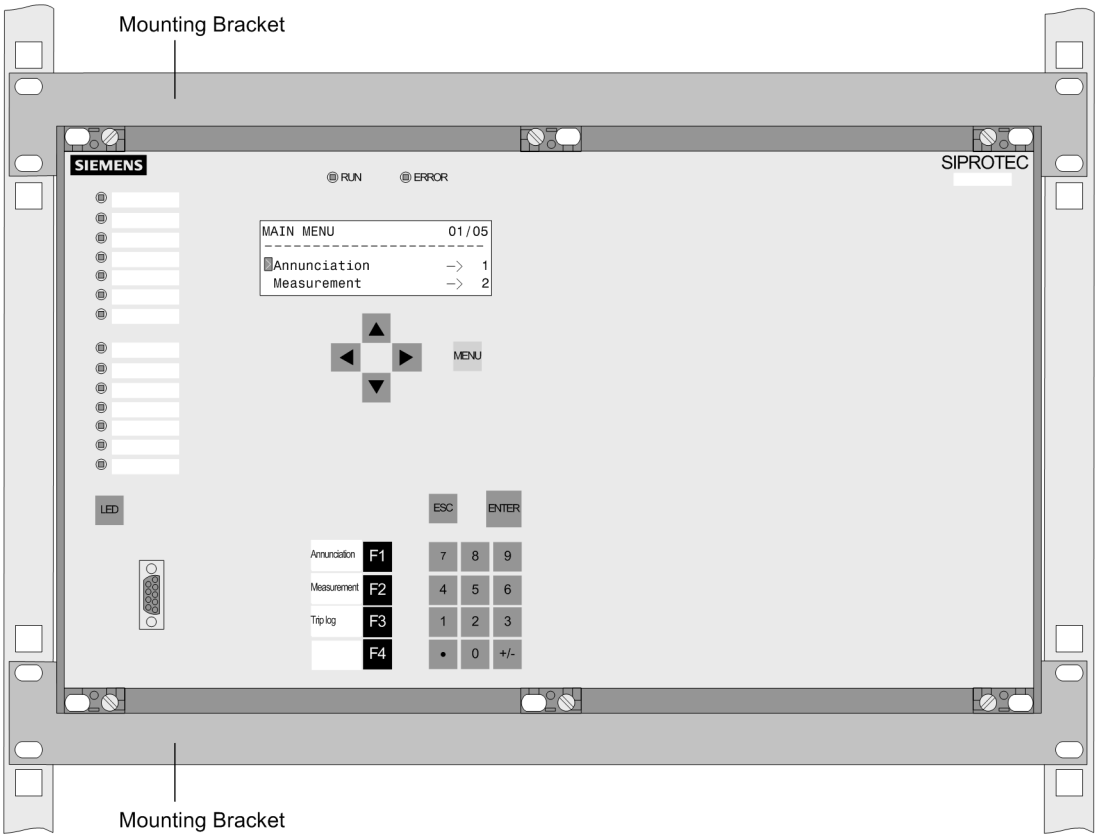

Figure 3-19 Mounting a device (housing size $^1/_1$) in a rack or cubicle

3.1.3.3 Panel Mounting

For mounting proceed as follows:

- Secure the device to the panel with four screws. For dimensions see the Technical Data in Section 4.23.
- Connect the low-resistance operational and protective earth to the ground terminal of the device. The cross-sectional area of the ground wire must be equal to the cross-sectional area of any other control conductor connected to the device. It must thus be at least 2.5 mm^2.
- Alternatively, there is the possibility to connect the aforementioned earthing to the lateral earthing surface with at least one M4 screw.
- Make the connections according to the circuit diagram via screw terminals, connections for optical fibres and electrical communication modules via the console housings. The specifications concerning the maximum cross-section, tightening torques, bending radii and strain relief given in the SIPROTEC 4 System Description must be observed. Installation notes are also given in the brief reference booklet that comes with the device.

3.2 Checking Connections

3.2.1 Checking Data Connections of Serial Interfaces

The tables in the following sections list the pin assignments for the different serial interfaces, the time synchronization interface and the Ethernet interface of the device. The position of the connectors is depicted in the following figures.

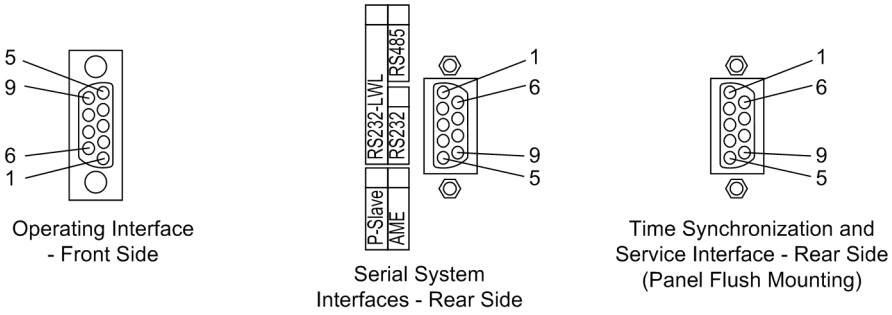

Figure 3-20 9-pin D-subminiature female connectors

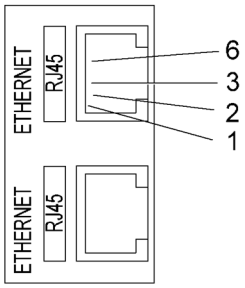

Figure 3-21 Ethernet connector

Operator Interface

When the recommended communication cable is used, correct connection between the SIPROTEC 4 device and the PC is automatically ensured. See the Appendix A.1 for an ordering description of the cable.

Service interface

Check the data connection if the service interface is used to communicate with the device via hard wiring or modem.

System interface

For versions equipped with a serial interface to a control center, the user must check the data connection. The visual check of the assignment of the transmission and reception channels is of particular importance. With RS232 and fibre optic interfaces, each connection is dedicated to one transmission direction. Therefore the output of one device must be connected to the input of the other device and vice versa.

With data cables, the connections are designated according to DIN 66020 and ISO 2110:

- TxD = Data Transmit
- RxD = Data Receive
- $\overline{\text{RTS}}$ = Request to Send
- $\overline{\text{CTS}}$ = Clear to Send
- GND = Signal / Chassis Ground

The cable shield is to be earthed at **both** line ends. For extremely EMC-prone environments, the earth may be connected via a separate individually shielded wire pair to improve immunity to interference.

Table 3-22 The assignments of the D-subminiature and RJ45 connector for the various interfaces

Pin No.	Operator interface	RS232	RS485	PROFIBUS FMS Slave, RS485 PROFIBUS DP Slave, RS485	DNP3.0 RS485	Ethernet EN100
1	Shield (with shield ends electrically connected)					Tx+
2	RxD	RxD	-	-	-	Tx-
3	TxD	TxD	A/A' (RxD/TxD-N)	B/B' (RxD/TxD-P)	A	Rx+
4	-	-	-	CNTR-A (TTL)	RTS (TTL level)	-
5	GND	GND	C/C' (GND)	C/C' (GND)	GND1	-
6	-	-	-	+5 V (max. load 100 mA)	VCC1	Rx-
7	$\overline{\text{RTS}}$	$\overline{\text{RTS}}$	- [1)]	-	-	-
8	$\overline{\text{CTS}}$	$\overline{\text{CTS}}$	B/B' (RxD/TxD-P)	A/A' (RxD/TxD-N)	B	-
9	-	-	-	-	-	Disabled

1) Pin 7 also carries the RTS signal with RS232 level when operated as RS485 Interface. Pin 7 must therefore not be connected!

Termination

The RS485 Interface is capable of half-duplex service with the signals A/A' and B/B' with a common relative potential C/C' (GND). Verify that only the last device on the bus has the terminating resistors connected, and that the other devices on the bus do not. The jumpers for the terminating resistors are located on the interface module RS485 (see Figure 3-12) or on the Profibus module RS485 (see Figure 3-13). The terminating resistors can also be connected externally (e.g. to the connection module as illustrated in Figure 3-15). In this case, the terminating resistors located on the module must be disabled.

If the bus is extended, make sure again that only the last device on the bus has the terminating resistors enabled, and that all other devices on the bus do not.

Time Synchronisation Interface

It is optionally possible to process 5 V, 12 V or 24 V time synchronization signals, provided that these are connected to the inputs named in the following table.

Table 3-23 D-subminiature connector assignment of the time synchronization interface

Pin No.	Designation	Signal meaning
1	P24_TSIG	Input 24 V
2	P5_TSIG	Input 5 V
3	M_TSIG	Return line
4	- [1)]	- [1)]
5	SHIELD	Shield potential
6	-	-
7	P12_TSIG	Input 12 V
8	P_TSYNC [1)]	Input 24 V [1)]
9	SHIELD	Shield potential

1) Assigned, but cannot be used

Optical Fibres

WARNING!

Do not look directly into the fibre-optic elements, not even with optical devices! Laser class 1 according to EN 60825-1.

For the protection data communication, refer to the following section.

The transmission via fiber optics is particularly insensitive to electromagnetic interference and thus ensures galvanic isolation of the connection. Transmit and receive connections are shown with the symbols ▪⟶ for transmit and ⟶• for receive.

The character idle state for the optical fibre interface is „Light off“. If the character idle state is to be changed, use the operating program DIGSI, as described in the SIPROTEC 4 System Description.

3.2.2 Checking the Protection Data Communication

If the device features protection data interfaces for digital communication links, the transmission way must be checked. The protection data communication is conducted either directly from device to device via optical fibres or via communication converters and a communication network or a dedicated transmission medium.

Optical Fibres, Directly

WARNING!

Laser Radiation Hazard!

Non-observance of the following measure can result in death, personal injury or substantial property damage.

Do not look directly into the fibre-optic elements, not even with optical devices! Laser class 1 according to EN 60825-1.

The direct optical fibre connection is visually inspected by means of an optical fibre connector. There is one connection for each direction. The data output of one device must be connected to the data input of the other device and vice versa. Transmission and receiving connections are identified with the symbols ▪⟶ for transmit and ⟶• for receive. The visual check of the assignment of the transmission and reception channels is important.

If using more than one device, the connections of all protection data interfaces are checked according to the topology selected.

Communication Converter

Optical fibres are usually used for the connections between the devices and communication converters. The optical fibres are checked in the same manner as the optical fibre direct connection which means for every protection data interface.

Make sure that under address 4502 **CONNEC. 1 OVER** or 4602 **CONNEC. 2 OVER** the correct connection type is parameterized.

Further Connections

For further connections a visual inspection is sufficient for the time being. Electrical and functional controls are performed during commissioning (see the following main section).

3.2.3 Checking the System Connections

WARNING!

Warning of dangerous voltages

Non-observance of the following measures can result in death, personal injury or substantial property damage.

Therefore, only qualified people who are familiar with and adhere to the safety procedures and precautionary measures shall perform the inspection steps.

Caution!

Be careful when operating the device on a battery charger without a battery

Non-observance of the following measure can lead to unusually high voltages and consequently, the destruction of the device.

Do not operate the device on a battery charger without a connected battery. (For limit values see also Technical Data, Section 4.1).

Before the device is energized for the first time, it should be in the final operating environment for at least 2 hours to equalize the temperature, to minimize humidity and avoid condensation. Connections are checked with the device at its final location. The plant must first be switched off and earthed.

Proceed as follows in order to check the system connections:

- Protective switches for the power supply and the measured voltages must be switched off.
- Check the continuity of all current and voltage transformer connections against the system and connection diagrams:
  - Are the current transformers earthed properly?
  - Are the polarities of the current transformers the same?
  - Is the phase relationship of the current transformers correct?
  - Are the voltage transformers earthed properly?
  - Are the polarities of the voltage transformers correct?
  - Is the phase relationship of the voltage transformers correct?
  - Is the polarity for current input I_4 correct (if used)?
  - Is the polarity for voltage input U_4 correct (if used, e.g. with open delta winding or busbar voltage)?
- Check the functions of all test switches that are installed for the purposes of secondary testing and isolation of the device. Of particular importance are test switches in current transformer circuits. Be sure these switches short-circuit the current transformers when they are in the „test mode“.

- The short circuit links of the connectors for the current circuits have to be checked. This can be done using secondary test equipment or other test equipment for checking continuity. Make sure that terminal continuity is not wrongly simulated in reverse direction via current transformers or their short-circuiters.
  - Remove the front panel of the device (see also Figures 3-3 to 3-4).
  - Remove the ribbon cable connected to the input/output board with the measured current inputs (on the front side it is the right PCB, for housing size $^1/_2$ see Figure 3-3 slot 33, for housing size $^1/_1$ see Figure 3-4 slot 33 right). Furthermore, remove the PCB so that there is no more contact with the plug-in terminal.
  - At the terminals of the device, check continuity for each pair of terminals that receives current from the CTs.
  - Firmly re-insert the I/O board. Carefully connect the ribbon cable. Be careful that no connector pins are bent! Don't apply force!
  - At the terminals of the device, again check continuity for each pair of terminals that receives current from the CTs.
  - Attach the front panel and tighten the screws.
- Connect an ammeter in the supply circuit of the power supply. A range of about 2.5 A to 5 A for the meter is appropriate.
- Switch on m.c.b. for auxiliary voltage (supply protection), check the voltage level and, if applicable, the polarity of the voltage at the device terminals or at the connection modules.
- The measured steady-state current should correspond to the quiescent power consumption of the device. Transient movement of the ammeter merely indicates the charging current of capacitors.
- Remove the voltage from the power supply by opening the protective switches.
- Disconnect the measuring test equipment; restore the normal power supply connections.
- Apply voltage to the power supply.
- Close the protective switches for the voltage transformers.
- Verify that the voltage phase rotation at the device terminals is correct.
- Open the miniature circuit breakers for the transformer voltage (VT mcb) and the power supply.
- Check tripping circuits to the circuit breakers.
- Check the close circuits to the power system circuit breakers.
- Verify that the control wiring to and from other devices is correct.
- Check the signalling connections.
- Close the protective switches.

3.3 Commissioning

WARNING!

Warning of dangerous voltages when operating an electrical device

Non-observance of the following measures can result in death, personal injury or substantial property damage.

Only qualified people shall work on and around this device. They must be thoroughly familiar with all warnings and safety notices in this instruction manual as well as with the applicable safety steps, safety regulations, and precautionary measures.

Before making any connections, the device must be earthed at the protective conductor terminal.

Hazardous voltages can exist in the power supply and at the connections to current transformers, voltage transformers, and test circuits.

Hazardous voltages can be present in the device even after the power supply voltage has been removed (capacitors can still be charged).

After removing voltage from the power supply, wait a minimum of 10 seconds before re-energizing the power supply. This wait allows the initial conditions to be firmly established before the device is re-energized.

The limit values given in Technical Data must not be exceeded, neither during testing nor during commissioning.

For tests with a secondary test equipment ensure that no other measurement voltages are connected and the trip and close commands to the circuit breakers are blocked, unless otherwise specified.

DANGER!

Hazardous voltages during interruptions in secondary circuits of current transformers

Non-observance of the following measure will result in death, severe personal injury or substantial property damage.

Short-circuit the current transformer secondary circuits before current connections to the device are opened.

During the commissioning procedure, switching operations must be carried out. The tests described require that they can be done without danger. They are accordingly not meant for operational checks.

WARNING!

Warning of dangers evolving from improper primary tests

Non-observance of the following measure can result in death, personal injury or substantial property damage.

Primary tests may only be carried out by qualified persons who are familiar with commissioning protection systems, with managing power systems and the relevant safety rules and guidelines (switching, earthing etc.).

3.3.1 Test Mode / Transmission Block

Activation and Deactivation

If the device is connected to a central control system or a server via the SCADA interface, then the information that is transmitted can be modified with some of the protocols available (see Table „Protocol-dependent functions“ in the Appendix A.5).

If **Test mode** is set ON, then a message sent by a SIPROTEC 4 device to the main system has an additional test bit. This bit allows the message to be recognized as resulting from testing and not an actual fault or power system event. Furthermore it can be determined by activating the **Transmission block** that no indications at all are transmitted via the system interface during test mode.

The SIPROTEC 4 System Description describes how to activate and deactivate test mode and blocked data transmission. Note that when DIGSI is being used, the program must be in the **Online** operating mode for the test features to be used.

3.3.2 Test Time Synchronisation Interface

If external time synchronization sources are used, the data of the time source (antenna system, time generator) are checked (see Section 4 under „Time Synchronization“). A correct function (IRIG B, DCF77) is recognized in such a way that 3 minutes after the startup of the device the clock status is displayed as „`synchronized`“, accompanied by the indication „`Alarm Clock OFF`“. For further information please refer to the SIPROTEC System Description.

Table 3-24 Time status

No.	Status text	Status
1	– – – – – – – –	synchronized
2	– – – – – – – – ST	
3	– – – – ER – –	not synchronized
4	– – – – ER ST	
5	– – NS ER – –	
6	– – NS – – – –	
Legend: – – NS – – – – – – – – ER – – – – – – – – ST		time invalid time fault summertime

3.3.3 Testing the System Interface

Prefacing Remarks

If the device features a system interface and uses it to communicate with the control centre, the DIGSI device operation can be used to test if messages are transmitted correctly. This test option should however definitely „not“ be used while the device is in service on a live system.

DANGER!

The sending or receiving of indications via the system interface by means of the test function is a real information exchange between the SIPROTEC 4 device and the control centre. Connected operating equipment such as circuit breakers or disconnectors can be switched in this way!

Non-observance of the following measure will result in death, severe personal injury or substantial property damage.

Equipment used to allow switching such as circuit breakers or disconnectors is to be checked only during commissioning. Do not under any circumstances check them by means of the testing mode during „real“ operation performing transmission and reception of messages via the system interface.

Note

After termination of the hardware test, the device will reboot. Thereby, all annunciation buffers are erased. If required, these buffers should be extracted with DIGSI prior to the test.

The interface test is carried out using DIGSI in the Online operating mode:

- Open the **Online** folder by double-clicking; the operating functions for the device appear.
- Click on **Test**; the function selection appears in the right half of the window.
- Double-click on **Testing Messages for System Interface** shown in the list view. The dialog box **Generate Indications** is opened (see Figure 3-22).

Structure of the Dialog Box

In the column **Indication**, all message texts that were configured for the system interface in the matrix will then appear. In the column **Setpoint** you determine a value for the indications that shall be tested. Depending on the type of message different entering fields are available (e.g. ***message ON*** / ***message OFF***). By clicking on one of the buttons you can select the desired value from the pull-down menu.

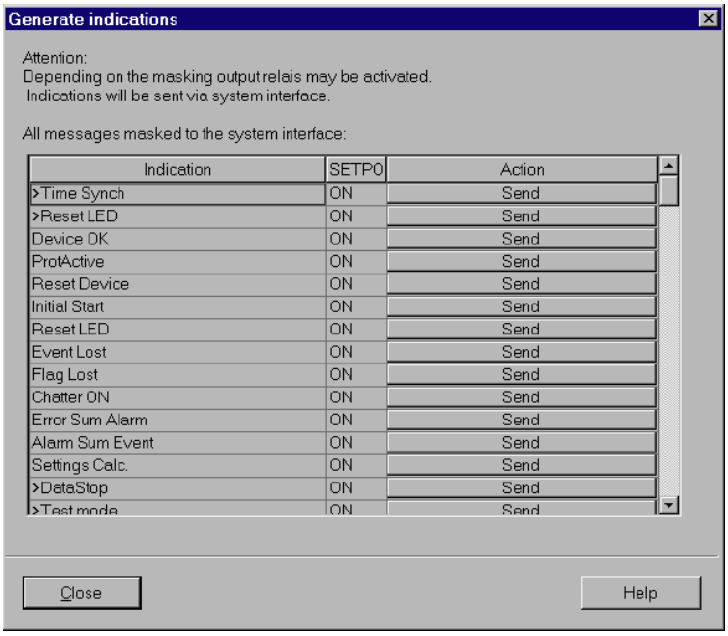

Figure 3-22 System interface test with dialog box: Generating indications – Example

Changing the Operating State

On clicking one of the buttons in the column **Action** you will be prompted for the password No. 6 (for hardware test menus). After correct entry of the password, individual annunciations can be initiated. To do so, click on the button **Send** in the corresponding line. The corresponding message is issued and can be read out either from the event log of the SIPROTEC 4 device or from the substation control center.

Further tests remain enabled until the dialog box is closed.

Test in Indication Direction

For all information that is transmitted to the central station, test in **Setpoint** the desired options in the list which appears:

- Make sure that each checking process is carried out carefully without causing any danger (see above and refer to DANGER!)
- Click on Send and check whether the transmitted information reaches the control centre and shows the desired reaction. Data which are normally linked via binary inputs (first character „>“) are likewise indicated to the control centre with this procedure. The function of the actual binary inputs is tested separately.

Exiting the Test Mode

To end the System Interface Test, click on **Close**. The dialog box closes. The processor system is restarted, then the device is ready for operation.

Test in Command Direction

Data which are normally linked via binary inputs (first character „>“) are likewise checked with this procedure. The information transmitted in command direction must be indicated by the central station. Check whether the reaction is correct.

3.3.4 Checking the switching states of the binary Inputs/Outputs

Prefacing Remarks

The binary inputs, outputs, and LEDs of a SIPROTEC 4 device can be individually and precisely controlled in DIGSI. This feature is used to verify control wiring from the device to plant equipment (operational checks) during commissioning. This test option should however definitely „not“ be used while the device is in service on a live system.

DANGER!

A changing of switching states by means of the test function causes a real change of the operating state at the SIPROTEC 4 device. Connected operating equipment such as circuit breakers or disconnectors will be switched in this way!

Non-observance of the following measure will result in death, severe personal injury or substantial property damage.

Equipment used to allow switching such as circuit breakers or disconnectors is to be checked only during commissioning. Do not under any circumstances check them by means of the testing mode during „real“ operation performing transmission and reception of messages via the system interface.

Note

After termination of the hardware test the device will reboot. Thereby, all annunciation buffers are erased. If required, these buffers should be extracted with DIGSI prior to the test.

The hardware test can be carried out using DIGSI in the Online operating mode:

- Open the **Online** directory by double-clicking; the operating functions for the device appear.
- Click on **Test**; the function selection appears in the right half of the window.
- Double-click in the list view on **Device inputs and outputs**. The dialog box with this name is opened (see Figure 3-23).

Structure of the Dialog Box

The dialog box is divided into three groups: **BI** for binary inputs, **BO** for binary outputs and **LED** for LEDs. An accordingly labelled button is on the left of each group. By double-clicking a button, information regarding the associated group can be shown or hidden.

In the column **Status** the present (physical) state of the hardware component is displayed. Indication is displayed symbolically. The physical actual states of the binary inputs and outputs are indicated by an open or closed switch symbol, the LEDs by switched on or switched off symbol.

The opposite state of each element is displayed in the column **Scheduled**. The display is in plain text.

The right-most column indicates the commands or messages that are configured (masked) to the hardware components.

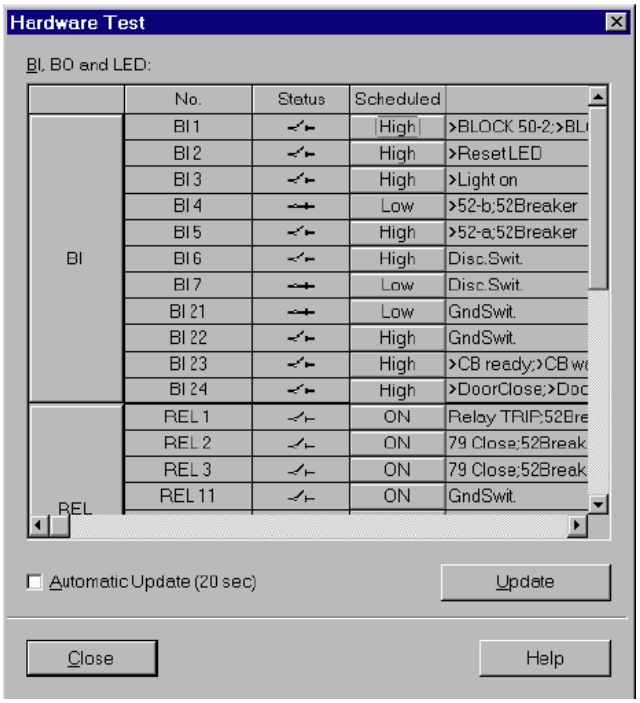

Figure 3-23 Test of the Binary Inputs and Outputs — Example

Changing the operating state

To change the operating state of a hardware component, click on the associated switching field in the **Scheduled** column.

Before executing the first change of the operating state the password No. 6 will be requested (if activated during configuration). After entry of the correct password a condition change will be executed. Further state changes remain enabled until the dialog box is closed.

Test of the Output Relays

Each individual output relay can be energized allowing a check of the wiring between the output relay of the 7SA522 and the plant, without having to generate the message that is assigned to the relay. As soon as the first change of state for any of the output relays is initiated, all output relays are separated from the internal device functions, and can only be operated by the hardware test function. This means, that e.g. a TRIP command coming from a protection function or a control command from the operator panel to an output relay cannot be executed.

Proceed as follows in order to check the output relay:

- Make sure that the switching operations caused by the output relays can be executed without any danger (see above under DANGER!).
- Each output relay must be tested via the corresponding **Scheduled** field of the dialog box.
- Finish the testing (see margin heading below „Exiting the Procedure“), so that during further testings no unwanted switchings are initiated.

Test of the Binary Inputs

To test the wiring between the plant and the binary inputs of the 7SA522 the condition in the system which initiates the binary input must be generated and the response of the device checked.

To do so, open the dialog box **Hardware Test** again to view the physical position of the binary input. The password is not yet required.

Proceed as follows in order to check the binary inputs:

- Each state in the system which causes a binary input to pick up must be generated.
- Check the reaction in the **Status** column of the dialog box. To do this, the dialog box must be updated. The options may be found below under the margin heading „Updating the Display“.
- Finish the test sequence (see margin heading below „Exiting the Procedure“).

If, however, the effect of a binary input must be checked without carrying out any switching in the system, it is possible to trigger individual binary inputs with the hardware test function. As soon as the first state change of any binary input is triggered and the password No. 6 has been entered, all binary inputs are separated from the system and can only be activated via the hardware test function.

Test of the LEDs

The light-emitting diodes (LEDs) may be tested in a similar manner to the other input/output components. As soon as the first state change of any LED has been triggered, all LEDs are separated from the internal device functionality and can only be controlled via the hardware test function. This means e.g. that no LED is illuminated anymore by a protection function or by pressing the LED reset button.

Updating the Display

When the dialog box **Hardware Test** is opened, the present conditions of the hardware components at that moment are read in and displayed.

An update is made:

- For the particular hardware component, if a command for change to another state was successful,
- For all hardware components if the **Update** button is clicked,
- For all hardware components with cyclical updating (cycle time is 20 sec) if the **Automatic Update (20 sec)** field is marked.

Exiting the Procedure

To end the hardware test, click on **Close**. The dialog box closes. Thus, all the hardware components are set back to the operating state specified by the plant states. The processor system is restarted, then the device is ready for operation.

3.3.5 Checking the Communication Topology

General

The communication topology can be checked from the PC using DIGSI.

You can either connect the PC to the device locally using the operator interface at the front, or the service interface at the back of the PC (Figure 3-24). Or you can log into the device using a modem via the service interface (example in Figure 3-25).

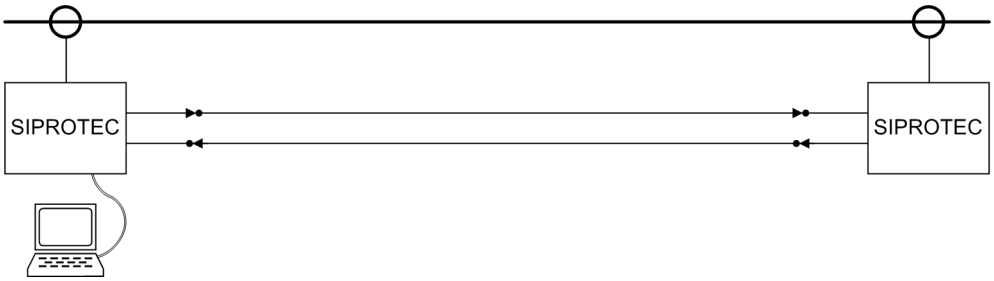

Figure 3-24 PC interfacing directly to the device - example

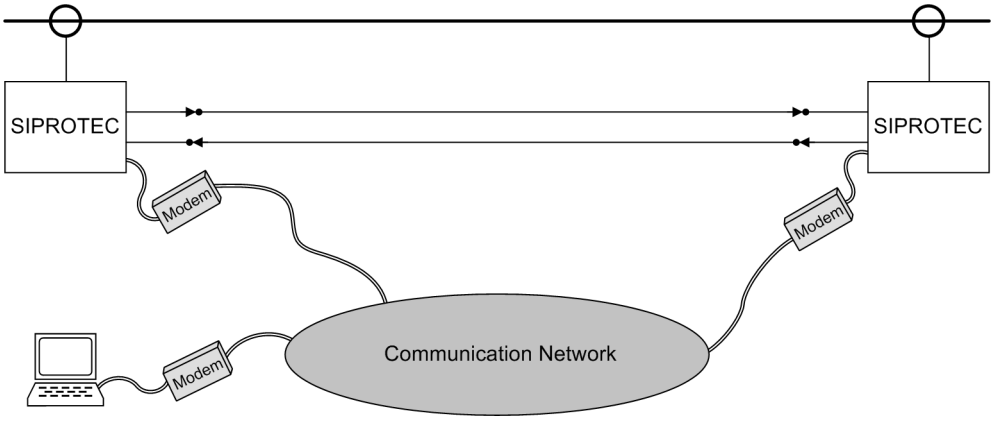

Figure 3-25 PC interfacing via modem — schematic example

Checking a Connection using Direct Link

For two devices linked with fibre optical cables (as in Figure 3-24 or 3-25), this connection is checked as follows. If two or more devices are linked or, if two devices have been (double-) linked with a ring topology, first check only one link.

- Both devices at the link ends have to be switched on.
- Check in the operating indications or in the spontaneous indications:
  - If the indication „`PI1 with`“ (protection data interface 1 connected with no. 3243) is provided with the device index of the other device, a link has been established and one device has detected the other.
  - If the protection data interface 2 has also been connected, a corresponding message will appear „`PI2 with`“ (No. 3244).
- In case of an incorrect communication link, the message „`PI1 Data fault`“ (No. 3229) or „`PI2 Data fault`“ (No. 3231) will appear. In this case, recheck the fibre optical cable link.
  - Have the devices been linked correctly and no cables been mixed up?
  - Are the cables free from mechanical damage, intact and the connectors locked?
  - Otherwise repeat check.

Continue with the margin heading „Consistency of Topology and Parameterization“.

Checking a Link with a Communication Converter

If a communication converter is used, please note the instructions enclosed with the device. The communication converter has a test setting where its outputs are looped back to the inputs.

Links via the communication converter are tested by means of local loop-back (Figure 3-26, left).

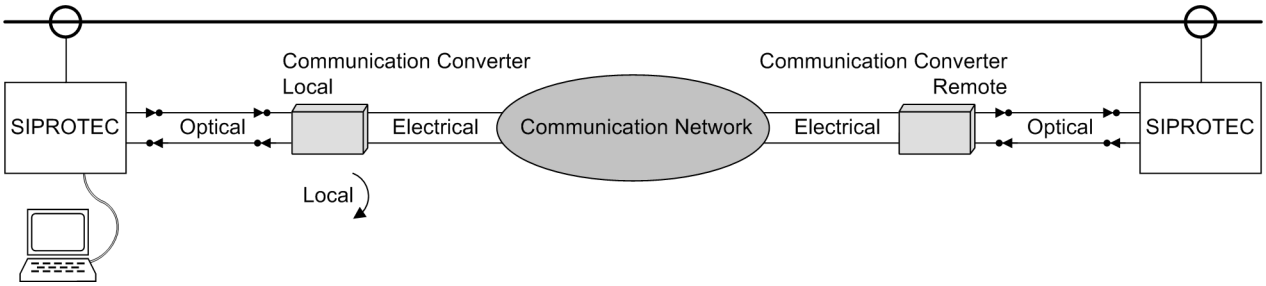

Figure 3-26 Protection data communication via communication converter and communication network — schematic example

DANGER!

Opening the Communication Converter

There is danger to life by energized parts!

Before opening the communication converter, it is absolutely necessary to isolate it from the auxiliary supply voltage at all poles!

- Both devices at the link ends have to be switched on.
- First configure the communication converter CC-1:
  - Open the communication converter.
  - Set the jumpers to the matching position for the correct interface type and transmission rate; they must be identical with the parameterization of the 7SA522 (address 4502 **CONNEC. 1 OVER** for protection data interface 1 and 4602 **CONNEC. 2 OVER** for protection data interface 2, see also Subsection 2.4.2).
  - Move the communication converter into test position (jumper X32 in position 2-3).
  - Close the communication converter housing.
- Reconnect the auxiliary supply voltage for the communication converter.
- The system interface (X.21 or G703.1) must be active and connected to the communication converter. Check this by means of the "device ready"-contact of the communication converter (continuity at the NO contact).
  - If the "device ready"-contact of the communication converter doesn't close, check the connection between the communication converter and the net (communication device). The communication device must emit the correct transmitter clock to the communication converter.
- Change the interface parameters at the 7SA522 (at the device front or via DIGSI):
  - Address 4502 **CONNEC. 1 OVER** = when you are testing protection data interface 1,
  - Address 4602 **CONNEC. 2 OVER** = ***F.optic direct*** when you are testing protection data interface 2.
- Check the operating indications or in the spontaneous annunciations:
  - Message 3217 „PI1 Data reflec“ (Protection interface 1 data reflection ON) when you test protection data interface 1,
  - Message 3218 „PI2 Data reflec“ (Protection interface 2 data reflection ON) when you test protection data interface 2.
  - When working with both interfaces, note that the current interface of the 7SA522 relay is connected to its associated communication converter.
  - If the indication is not transmitted check for the following:
  - Has the 7SA522 fibre optical transmitting terminal output been correctly linked with the fibre optical receiving terminal input of the communication converter and vice versa (No erroneous interchanging)?
  - Does the 7SA522 device have the correct interface module and is it working correctly?
  - Are the fibre optic cables intact?
  - Are the parameter settings for interface type and transmission rate at the communication converter correct (see above; note the DANGER instruction!)?
  - Repeat the check after correction, if necessary.
- Reset the interface parameters at the 7SA522 correctly:
  - Address 4502 **CONNEC. 1 OVER** = required setting, when you have tested protection data interface 1,
  - Address 4602 **CONNEC. 2 OVER** = required setting, when you have tested protection data interface 2.
- Disconnect the auxiliary supply voltage of the communication converter at both poles. Note the above DANGER instruction!
- Reset the communication converter to normal position (X32 in position 1-2) and close the housing again.
- Reconnect the supply voltage of the communication converter.

Perform the above check at the other end with the device being connected there and its corresponding communication converter.

Continue with the margin heading „Consistency of Topology and Parameterization“.

Consistency of Topology and Parameterisation

Having performed the above checks, the linking of a device pair, including their communication converters, has been completely tested and connected to the auxiliary supply voltage. Now the devices communicate by themselves.

- Check now the Event Log or the spontaneous annunciations of the device you are working on:
  - Message No. 3243 „PI1 with“ (protection data interface 1 linked with) followed by the device index of the other device, if interface 1 is applying. For protection data interface 2 the message is No. 3244 „PI2 with“.
  - If the devices are at least connected once, the message No. 3458 „Chaintopology“ will appear.
  - If no other devices are involved in the topology as an entity, the message No. 3464 „Topol complete“ will then be displayed, too.
  - And if the device parameterization is also consistent, i.e. the prerequisites for setting the function scope (Section 2.1.1), Power System Data 1 (2.1.2.1), Power System Data 2 (2.1.4.1) topology and protection data interface parameters (Section 2.4.2) have been considered, the error message, i.e. No. 3229 „PI1 Data fault“ or No. 3231 „PI2 Data fault“ for the interface just checked will disappear. The communication and consistency test has now been completed.
  - If the fault message of the interface being checked does not disappear, however, the fault must be found and eliminated. Table 3-25 lists messages that indicate such faults.

Table 3-25 Messages on Inconsistencies

No.	LCD Text	Meaning / Measures
3233	„DT inconsistent“	„Device table inconsistent“: The indexing of the devices is inconsistent (missing numbers or one number used twice, see Section 2.4.2)
3234	„DT unequal“	„Device table unequal“: the ID-numbers of the devices are unequal (see Section 2.4.2)
3235	„Par. different“	„Parameterization different“: Different functional parameters were set for the devices. They have to be equal at both ends.

The following function parameters must agree to all ends:

- Phase sequence (address 235);
- If you work with teleprotection via the protection data interface (address 121 = ***SIGNALv.ProtInt***), the parameter **FCT Telep. Dis.** (address 2101) must be controlled;
- Where direction comparison with protection data interface is used in earth fault protection, parameter **Teleprot. E/F** (address 132) must be taken into account.

Checking Further Links

If more than two devices have been linked, that is if the object to be protected has more than two ends, or, if two devices have been linked via both protection data inter-faces to create redundancy, repeat all checks for every possible link as described above including the consistency check.

If all devices involved in the topology communicate properly and all parameters are consistent, the message No. 3464 „Topol complete“ appears.

If there is a ring topology (only in connection with a 7SA522), the message No. 3457 „Ringtopology“ must also appear after closing the ring.

However, if you are employing a ring topology, which only issues the indication „Chaintopology“ instead of „Ringtopology“, the protection data communication is functionable, but the ring has not yet been closed. Check the missing links as described above including the consistency test until all links to the ring have been made.

Finally, there should be no more fault messages of the protection data interfaces.

3.3.6 Test Mode for Teleprotection Scheme with Protection Data Interface

Local Test Mode

The „local test mode“ can be used for commissioning or revision tests of the teleprotection scheme via protection data interface.

Select from the menus „Control“ -> „Tagging“ -> „Set“ to set the „Test mode“ tagging. The tagging is protected against loss of the auxiliary voltage. The indication 3196 „`local Teststate`“ is output to indicate that the test mode is activated.

When the local device is in test mode, all information transferred via the protection data interface is marked with the attribute „Test mode“.

The teleprotection scheme via protection data interface can be tested as follows:

1. A fault generated at the local device by some test equipment generates the required send signals.
2. The send signals are transmitted to the remote end with the attribute „Test mode“.
3. The remote end receives the send signal with the attribute „Test mode“ and mirrors the received send signals as its own send signals, likewise with the attribute „Test mode“, selectively for each phase back to the local device (the received send signals are not evaluated in terms of protection).
4. The local device receives the mirrored signals and feeds them into its own teleprotection schemes, where they may cause the output of a trip signal.

Note

As long as a device is in „protection data interface test mode“, selective line protection is not ensured!

3.3.7 Checking for Breaker Failure Protection

General

If the device is equipped with the breaker failure protection and this function is used, the integration of this protection function into the system must be tested under practical conditions.

Because of the manifold applications and various configuration possibilities of the plant it is not possible to give a detailed description of the necessary test steps. It is important to consider the local conditions and the protection and plant drawings.

Before starting the circuit tests it is recommended to isolate the circuit breaker of the feeder to be tested at both ends, i.e. line disconnectors and busbar disconnectors should be open so that the breaker can be operated without risk.

Caution!

Also for tests on the local circuit breaker of the feeder a trip command to the surrounding circuit breakers can be issued for the busbar.

Non-observance of the following measure can result in minor personal injury or property damage.

First disable the trip commands to the adjacent (busbar) breakers, e.g. by interrupting the associated control voltages.

Before the breaker is closed again for normal operation the trip command of the feeder protection routed to the circuit breaker must be disconnected so that the trip command can only be initiated by the breaker failure protection.

Although the following list does not claim to be complete, it may also contain points which are to be ignored in the current application.

Auxiliary Contacts of the CB

The circuit breaker auxiliary contact(s) form an essential part of the breaker failure protection system in case they have been connected to the device. Make sure the correct assignment has been checked.

External Initiation Conditions

If the breaker failure protection can also be started by external protection devices, the external start conditions are checked. Depending on the device version and the setting of the breaker failure protection, 1-pole or 3-pole trip are possible. The pole discrepancy check of the device or the actual breaker may lead to 3-pole tripping after 1-pole tripping. Therefore check first how the parameters of the breaker failure protection are set. See also Section 2.18.2, addresses 3901 onwards.

In order for the breaker failure protection to be started, a current must flow at least through the monitored phase and the earth. This may be a secondary injected current.

After every start the indication „BF Start“ (no. 1461) must appear in the spontaneous or fault indications.

If only 1-pole initiation is possible:

- Start by 1-pole trip command of the external protection L1:

  Binary input functions „>BF Start L1“ and, if necessary, „>BF release“ (in spontaneous or fault indications). Trip command (depending on settings).
- Start by 1-pole trip command of the external protection L2:

  Binary input functions „>BF Start L2“ and, if necessary, „>BF release“ (in spontaneous or fault indications). Trip command (depending on settings).
- Start by 1-pole trip command of the external protection L3:

  Binary input functions „>BF Start L3“ and, if necessary, „>BF release“ (in spontaneous or fault indications). Trip command (dependent on settings).
- Start by 3-pole trip command of the external protection via all three binary inputs L1, L2 and L3:

  Binary input functions „>BF Start L1“, „>BF Start L2“ and „>BF Start L3“ and, if necessary, „>BF release“ (in spontaneous or fault indications). 3-pole trip command.

For 3-pole initiation:

- Start by 3-pole trip command of the external protection :

  Binary input functions „>BF Start 3pole“ and, if necessary, „>BF release“ (in spontaneous or fault indications). Trip command (dependent on settings).

Switch off test current.

If start is possible without current flow:

- Starting by trip command of the external protection without current flow:

  Binary input functions „>BF Start w/o I“ and, if necessary, „>BF release“ (in spontaneous or fault indications). Trip command (dependent on settings).

Busbar Tripping

The most important thing is the check of the correct distribution of the trip commands to the adjacent circuit breakers in case of breaker failure.

The adjacent circuit breakers are those of all feeders which must be tripped in order to ensure interruption of the fault current should the local breaker fail. These are therefore the circuit breakers of all feeders which feed the busbar or busbar section to which the feeder with the fault is connected.

A general detailed test guide cannot be specified because the layout of the adjacent circuit breakers largely depends on the system topology.

In particular with multiple busbars the trip distribution logic for the surrounding circuit breakers must be checked. Here check for every busbar section that all circuit breakers which are connected to the same busbar section as the feeder circuit breaker under observation are tripped, and no other breakers.

Tripping of the Remote End

If the trip command of the circuit breaker failure protection must also trip the circuit breaker at the remote end of the feeder under observation, the transmission channel for this remote trip must also be checked. This is done together with transmission of other signals according to Sections „Testing of the Teleprotection Scheme with ...“ further below.

Termination of the Checks

All temporary measures taken for testing must be undone, e.g. especially switching states, interrupted trip commands, changes to setting values or individually switched off protection functions.

3.3.8 Current, Voltage, and Phase Rotation Testing

≥ 10 % of Load Current

The connections of the current and voltage transformers are tested using primary quantities. Secondary load current of at least 10 % of the nominal current of the device is necessary. The line is energized and will remain in this state during the measurements.

With proper connections of the measuring circuits, none of the measured-values supervision elements in the device should pick up. If an element detects a problem, the causes which provoked it may be viewed in the Event Log.

If current or voltage summation errors occur, then check the matching factors (see Section 2.1.2.1).

Messages from the symmetry monitoring could occur because there actually are asymmetrical conditions in the network. If these asymmetrical conditions are normal service conditions, the corresponding monitoring functions should be made less sensitive (see Section 2.19.1.6) .

Quantities

Currents and voltages can be viewed in the display field on the front of the device or the operator interface via a PC. They can be compared to the actual measured values, as primary and secondary quantities.

If the measured values are not plausible, the connection must be checked and corrected after the line has been isolated and the current transformer circuits have been short-circuited. The measurements must then be repeated.

Phase Rotation

The phase rotation must correspond to the configured phase rotation, in general a clockwise phase rotation. If the system has an anti-clockwise phase rotation, this must have been considered when the power system data was set (address 235 **PHASE SEQ.**). If the phase rotation is incorrect, the alarm „Fail Ph. Seq.“ (No. 171) is generated. The measured value phase allocation must be checked and corrected, if required, after the line has been isolated and current transformers have been short-circuited. The phase rotation check must then be repeated.

Voltage Transformer MCB

Open the miniature circuit breaker of the feeder voltage transformers. The measured voltages in the operational measured values appear with a value close to zero (small measured voltages are of no consequence).

Check in the spontaneous annunciations that the VT mcb trip was entered (message „>FAIL:Feeder VT“ „ON“ in the spontaneous annunciations). Beforehand it has to be assured that the position of the VT mcb is connected to the device via a binary input.

Close the VT mcb again: The above messages appear in the spontaneous messages as „OFF“, i.e. „>FAIL:Feeder VT“ „OFF“.

If one of the annunciations does not appear, check the connection and allocation of these signals.

If the „ON“ state and the „OFF“ state are swapped, the contact type (H–active or L–active) must be checked and remedied.

If synchronism check is used and if the assigned VT mcb auxiliary contact is connected to the device, its function must also be checked. When opening the mcb, the indication „>FAIL:U4 VT“ „ON“ appears. If the mcb is closed, the indication „>FAIL:U4 VT“ „OFF “is displayed.

Switch off the protected power line.

3.3.9 Directional Check with Load Current

≥ 10 % of Load Current

The correct connection of the current and voltage transformers is tested via the protected line using the load current. For this purpose, connect the line. The load current the line carries must be at least $0.1 \cdot I_N$. The load current should be in-phase or lagging the voltage (resistive or resistive-inductive load). The direction of the load current must be known. If there is a doubt, network or ring loops should be opened. The line remains energized during the test.

The direction can be derived directly from the operational measured values. Initially the correlation of the measured load direction with the actual direction of load flow is checked. In this case the normal situation is assumed whereby the forward direction (measuring direction) extends from the busbar towards the line (see the following Figure).

P positive, if active power flows into the line,

P negative, if active power flows towards the busbar,

Q positive, if reactive power flows into the line,

Q negative, if reactive power flows toward the busbar.

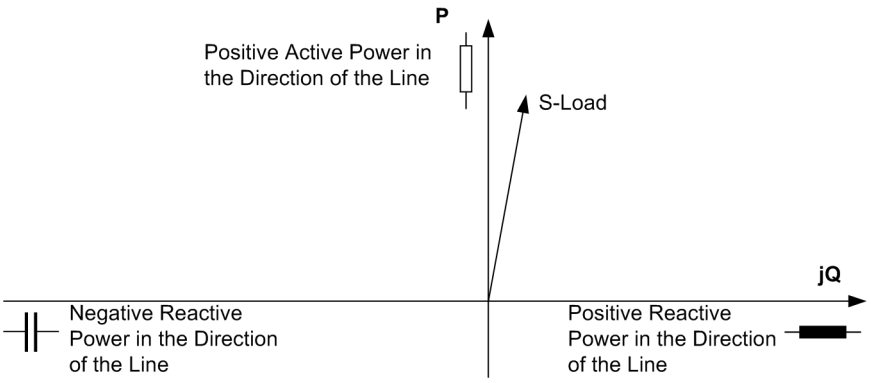

Figure 3-27 Apparent Load Power

The power measurement provides an initial indication as to whether the measured values have the correct polarity. If both the active power as well as the reactive power have the wrong sign, the polarity in address 201 **CT Starpoint** must be checked and rectified.

However, power measurement itself is not able to detect all connection errors. Accordingly, the impedances of all six measuring loops are evaluated. These can also be found as primary and secondary quantities in the operational measured values.

All six measured loops must have the same impedance components (R and X). Small variations may result due to the non-symmetry of the measured values. In addition, the following applies for all impedances when the load is in the first quadrant:

R, **X** both positive, when power flows into the line,

R, **X** both negative, when power flows towards the busbar.

In this case the normal situation is assumed whereby the forward direction (measuring direction) extends from the busbar towards the line. In the case of capacitive load, caused by e.g. underexcited generators or charging currents, the X-components may all have the opposite sign.

If significant differences in the values of the various loops are present, or if the individual signs are different, then individual phases in the current or voltage transformer circuits are swapped, not connected correctly, or the phase allocation is incorrect. After isolation of the line and short-circuiting of the current transformers the connections must be checked and corrected. The measurements must then be repeated.

Finally, switch off the protected power line.

3.3.10 Polarity Check for the Voltage Input U_4

Depending on the application of the voltage measuring input U_4, a polarity check may be necessary. If no measuring voltage is connected to this input, this section is irrelevant.

If the input U_4 is used for measuring a voltage for overvoltage protection (**P.System Data 1** address 210 **U4 transformer** = ***Ux transformer***), no polarity check is necessary because the polarity is irrelevant here. The voltage magnitude was checked before.

If the input U_4 is used for the measurement of the displacement voltage U_{en} (**P.System Data 1** address 210 **U4 transformer** = ***Udelta transf.***), the polarity together with the current measurement is checked (see below).

If input U_4 is used for measuring a voltage of the synchronism check (**P.System Data 1** address 210 **U4 transformer** = ***Usy2 transf.***), the polarity must be checked as follows using the synchronism check function:

Only for Synchronism Check

The device must be equipped with the synchronism and voltage check function which must be configured under address 135 ***Enabled*** (see section 2.1.1.2).

The synchronisation voltage U_{sy2} must be entered correctly at address 212 **Usy2 connection** (see Section 2.1.2.1).

If there is no transformer between the two measuring points, address 214 φ **Usy2-Usy1** must be set to ***0***° (see Section 2.1.2.1).

If the measurement is made across a transformer, this angle setting must correspond to the phase rotation resulting from the vector group of the transformer (see also the example in section 2.1.2.1).

If necessary, different transformation ratios of the transformers may have to be considered from both measuring points U_{sy1} and U_{sy2} at address 215 **Usy1/Usy2 ratio**.

The synchronism and voltage check must be switched ***ON*** under address 3501 **FCT Synchronism**.

An additional help for the connection check are the messages 2947 „Sync. Udiff>“ and 2949 „Sync. φ-diff>“ in the spontaneous annunciations.

- Circuit breaker is open. The feeder is isolated (zero voltage). The VTmcb's of both voltage transformer circuits must be closed.
- For the synchronism check the program **AR OVERRIDE** = ***YES*** (address 3519) is set; the other programs (addresses 3515 through 3518) are set to ***NO***.
- Via binary input (No. 2906 „>Sync. Start AR“) initiate the measuring request. The synchronism check must release closing (message „Sync. release“, No. 2951). If not, check all relevant parameters again (synchrocheck configured and enabled correctly, see Sections 2.1.1.2, 2.1.2.1 and 2.14.2).
- Address 3519 **AR OVERRIDE** must be set to ***NO***.
- Then the circuit breaker is closed while the line isolator is open (see Figure 3-28). Both voltage transformers therefore measure the same voltage.
- The program **AR SYNC-CHECK** = (address 3515) is set for synchronism check.
- Via binary input (No. 2906 „>Sync. Start AR“) initiate the measuring request. The synchronism check must release closing (message „Sync. release“, No. 2951).

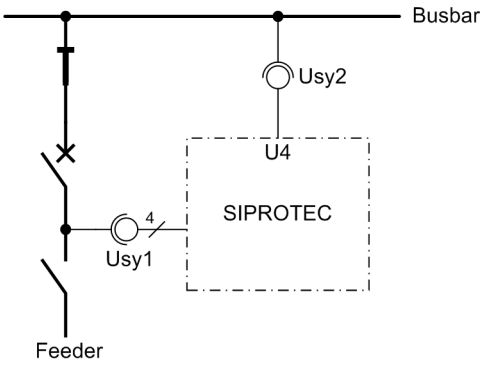

Figure 3-28 Measuring voltages for the synchrocheck — example

- If not, first check whether one of the before named messages 2947 „Sync. Udiff>“ or 2949 „Sync. φ-diff>“ is available in the spontaneous messages.

  The indication „Sync. Udiff>“ indicates that the magnitude (ratio) adaptation is incorrect. Check address 215 **Usy1/Usy2 ratio** and recalculate the adaptation factor, if necessary.

  The indication „Sync. φ-diff>“ indicates that the phase relation, in this example of the busbar voltage, does not match the setting at address 212 **Usy2 connection** (see Section 2.1.2.1). When measuring across a transformer, address 214 φ **Usy2-Usy1** must also be checked; this must adapt the vector group (see Section 2.1.2.1). If these are correct, there is probably a reverse polarity of the voltage transformer terminals for U_{sy2}.
- The program **AR Usy1>Usy2<** = ***YES*** (address 3517) and **AR SYNC-CHECK** = (address 3515) is set for synchronism check.
- Open the VT mcb of the measuring point U_{sy2} (No. 362 „>FAIL:U4 VT“).
- Via binary input (no. 2906 „>Sync. Start AR“) a measuring request is entered. There is no close release. If there is, the VT mcb for the measuring point U_{sy2} is not allocated. Check whether this is the required state, alternatively check the binary input „>FAIL:U4 VT“ (no. 362).
- Reclose the VT mcb of the measuring point U_{sy2}.
- Open the circuit breaker.
- The program **AR Usy1<Usy2>** = ***YES*** (address 3516) and **AR Usy1>Usy2<** = ***NO*** (address 3517) is set for synchronism check.
- Via binary input (No. 2906„>Sync. Start AR“) initiate the measuring request. The synchronism check must release closing (message „Sync. release“, No. 2951). If not, check all voltage connections and the corresponding parameters again carefully as described in Section 2.1.2.1.
- Open the VT mcb of the measuring point U_{sy1} (No. 361 „>FAIL:Feeder VT“).
- Via binary input (No. 2906 „>Sync. Start AR“) initiate the measuring request. No close release is given.
- Reclose the VT mcb of the measuring point U_{sy1}.

Addresses 3515 to 3519 must be restored as they were changed for the test. If the allocation of the LEDs or signal relays was changed for the test, this must also be restored.

3.3.11 Polarity Check for the Current Input I_4

If the standard connection of the device is used whereby current input I_4 is connected in the starpoint of the set of current transformers (refer also to the connection circuit diagram in the Appendix A.3), then the correct polarity of the earth current path in general automatically results.

If, however, the current I_4 is derived from a separate summation CT or from a different point of measurement, e.g. transformer star-point current or earth current of a parallel line, an additional polarity check with this current is necessary.

If the device features the sensitive current input for I_4 and if it is used in an isolated or resonant-earthed system, the polarity check for I_4 was already carried out with the earth fault check according to the previous section. Then this section can be ignored.

Apart from that the test is carried out with a disconnected trip circuit and primary load current. It must be noted that during all simulations not exactly corresponding with cases that occur in practice, the asymmetry of measured values may cause the measured value monitoring to pick up. They must therefore be ignored during such tests.

DANGER!

Hazardous voltages during interruptions in secondary circuits of current transformers

Non-observance of the following measure will result in death, severe personal injury or substantial property damage.

Short-circuit the current transformer secondary circuits before current connections to the device are opened.

I_4 from Own Line

To generate a displacement voltage, the e-n winding of one phase in the voltage transformer set (e.g. L1) is bypassed (refer to Figure 3-29). If no connection to the e-n windings of the voltage transformer is available, the corresponding phase is open circuited on the secondary side. Via the current path only the current from the current transformer in the phase from which the voltage in the voltage path is missing, is connected; the other CTs are short-circuited. If the line carries resistive-inductive load, the protection is in principle subject to the same conditions that exist during an earth fault in the direction of the line.

At least one stage of the earth fault protection must be set to be directional (address 31x0 of the earth fault protection). The pickup threshold of this stage must be below the load current flowing on the line; if necessary the pickup threshold must be reduced. Note down the parameters that you have changed.

After switching the line on and off again, the direction indication must be checked: in the fault log the messages „EF Pickup“ and „EF forward“ must at least be present. If the directional pickup is not present, either the earth current connection or the displacement voltage connection is incorrect. If the wrong direction is indicated, either the direction of load flow is from the line toward the busbar or the earth current path has a swapped polarity. In the latter case, the connection must be rectified after the line has been isolated and the current transformers short-circuited.

The voltages can be read on the display at the front, or called up in the PC via the operator or service interface, and compared with the actual measured quantities as primary or secondary values. The voltages can also be read out with the Web-Monitor. For devices with protection data interface, besides the magnitudes of the phase-to-phase and the phase-to-earth voltages, the phase angles can be read out, thus enabling to verify the correct phase sequence and polarity of individual voltage transformer.

In the event that the pickup alarms were not even generated, the measured earth (residual) current may be too small.

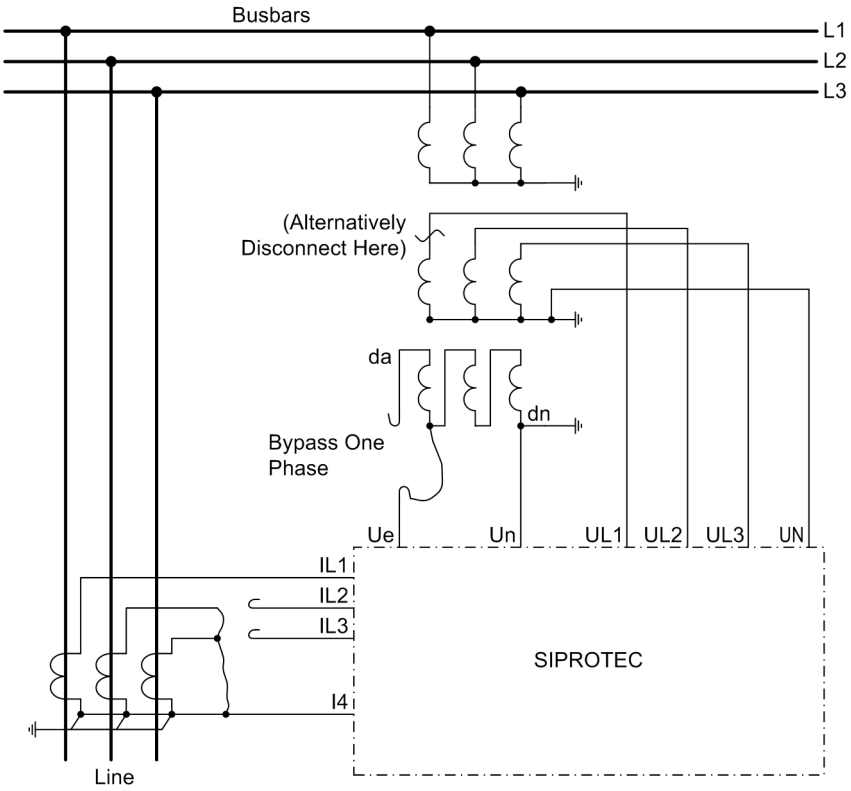

Figure 3-29 Polarity check for I_4, example with current transformer configured in a Holmgreen connection

Note

If parameters were changed for this test, they must be returned to their original state after completion of the test!

I_4 from Parallel Line

If I_4 is the current measured on a parallel line, the above procedure is done with the set of current transformers of the parallel line (Figure 3-30). The same method as above is used here, except that a single phase current from the parallel feeder is measured. The parallel line must carry load while the protected line should carry load. The line remains switched on for the duration of the measurement.

If the polarity of the parallel line earth current measurement is correct, the impedance measured in the tested loop (in the example of Figure 3-30 this is L1-E) should be reduced by the influence of the parallel line (power flow in both lines in the same direction). The impedance can be read out as primary or secondary quantity in the list of operational measured values.

If, on the other hand, the measured impedance increases when compared to the value without parallel line compensation, the current measuring input I_4 has a swapped polarity. After isolation of both lines and short-circuiting of the current transformer secondary circuits, the connections must be checked and rectified. Subsequently the measurement must be repeated.

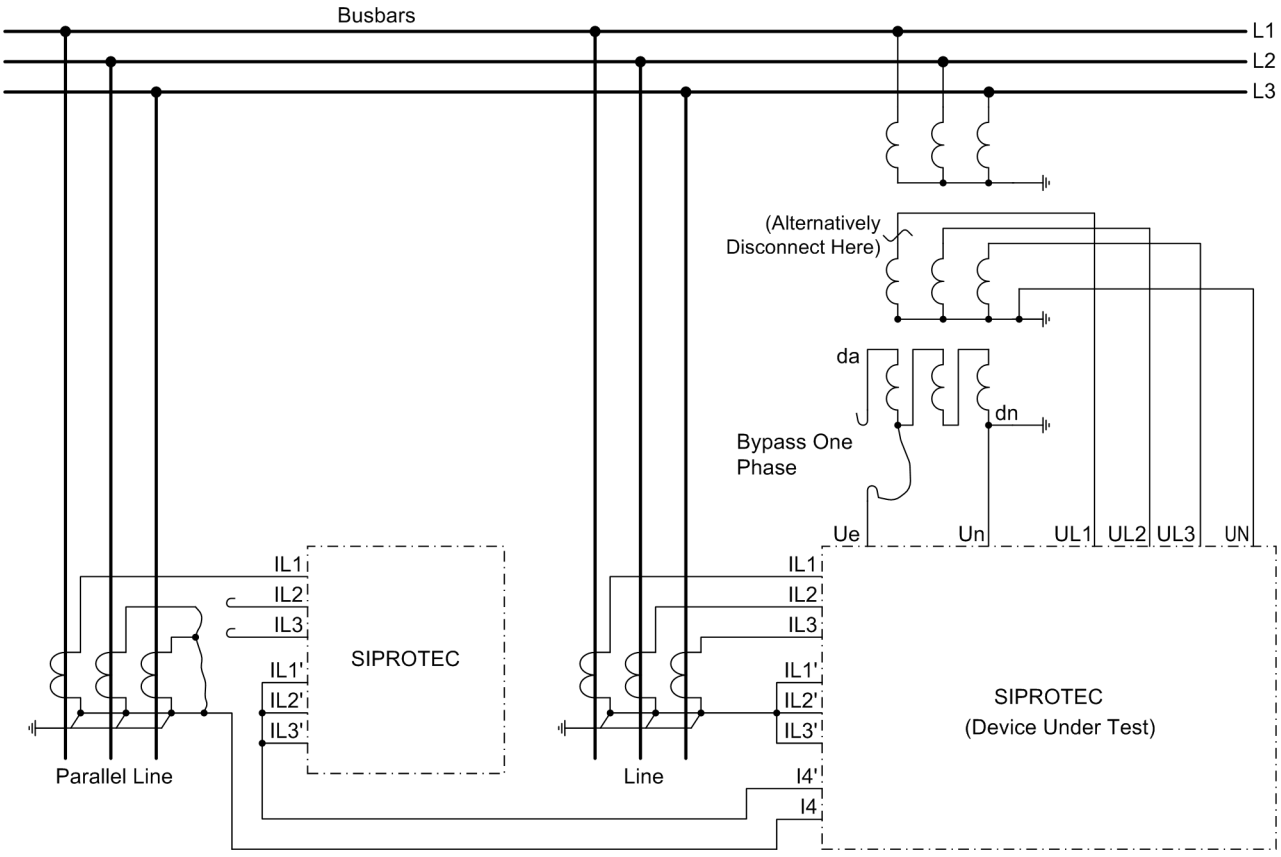

Figure 3-30 Polarity check of I_4, example with earth current of a parallel line

I_4 from a Power Transformer Starpoint

If I_4 is the earth current measured in the star-point of a power transformer and intended for the earth fault protection direction determination (for earthed networks), then the polarity check can only be carried out with zero sequence current flowing through the transformer. A test voltage source is required for this purpose (single-phase low voltage source).

Caution!

Feeding of zero sequence currents via a transformer without broken delta winding.

Inadmissible heating of the transformer is possible!

Zero sequence current should only be routed via a transformer if it has a delta winding, therefore e.g. Yd, Dy or Yy with a compensating winding.

DANGER!

Energized equipment of the power system! Capacitive coupled voltages at disconnected equipment of the power system !

Non-observance of the following measure will result in death, severe personal injury or substantial property damage.

Primary measurements must only be carried out on disconnected and earthed equipment of the power system!

The configuration shown in Figure 3-31 corresponds to an earth current flowing through the line, in other words an earth fault in the forward direction.

At least one stage of the earth fault protection must be set to be directional (address 31xx of the earth fault protection). The pickup threshold of this stage must be below the load current flowing on the line; if necessary the pickup threshold must be reduced. The parameters that have been changed, must be noted.

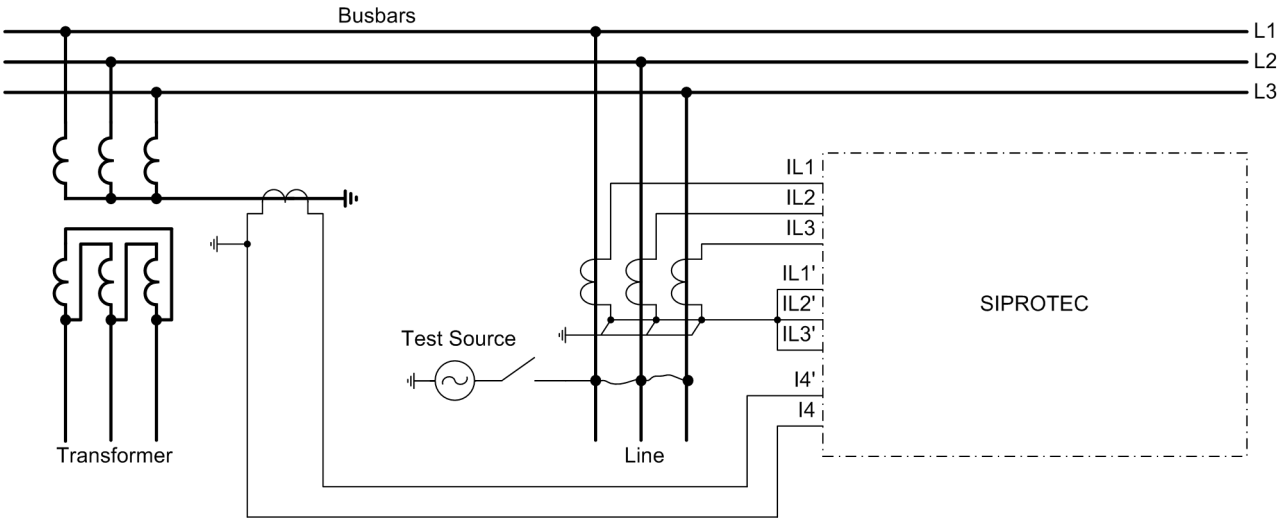

Figure 3-31 Polarity check of I_4, example with earth current from a power transformer star point

After switching the test source on and off again, the direction indication must be checked: The fault log must at least contain the messages „EF Pickup“ and „EF forward“. If the directional pickup is missing, a connection error of the earth current connection I_4 is present. If the wrong direction is indicated, the earth current connection I_4 has a swapped polarity. In the latter case, the connection must be corrected after the test source has been switched off. The measurements must then be repeated.

If the pickup alarm is missing altogether, this may be due to the fact that the test current is too small.

Note

If parameters were changed for this test, they must be returned to their original state after completion of the test !

3.3.12 Measuring the Operating Time of the Circuit Breaker

Only for Synchronism Check

If the device is equipped with the function for synchronism and voltage check and it is applied, it is necessary - under asynchronous system conditions - that the operating time of the circuit breaker is measured and set correctly when closing. If the synchronism check function is not used or only for closing under synchronous system conditions, this section is irrelevant.

For measuring the operating time a setup as shown in Figure 3-32 is recommended. The timer is set to a range of 1 s and a graduation of 1 ms.

The circuit breaker is closed manually. At the same time the timer is started. After closing the circuit breaker poles the voltage U_{sy1} or U_{sy2} appears and the timer is stopped. The time displayed by the timer is the real circuit breaker closing time.

If the timer is not stopped due to an unfavourable closing moment, the attempt will be repeated.

It is particularly favourable to calculate the mean value from several (3 to 5) successful switching attempts.

Set the calculated time under address 239 as **`T-CB close`** (under **`P.System Data 1`**). Select the next lower settable value.

Note

The operating time of the accelerated output relays for command tripping is taken into consideration by the device itself. The trip command is to be allocated to such a relay. If this is not the case, then add 3 ms to the measured circuit breaker operating time for achieving a greater response time of the „normal“ output relay. If high-speed relays are used, on the other hand, you must deduct 4 ms from the measured circuit breaker operating time.

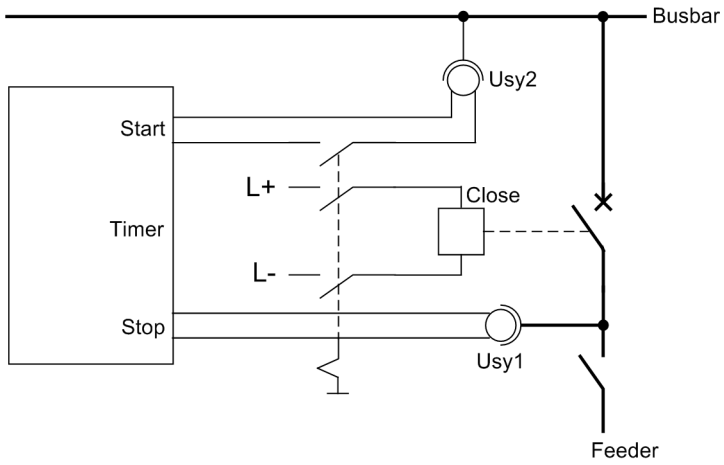

Figure 3-32 Measuring the circuit breaker closing time

3.3.13 Testing of the Teleprotection System with Distance Protection

Note

If the device is intended to operate with teleprotection, all devices used for the transmission of the signals must initially be commissioned according to the corresponding instructions.

The following section applies only for the conventional transmission procedures. It is not relevant for usage with protection data interfaces.

For the functional check of the signal transmission, the earth fault protection should be disabled, to avoid signals from this protection influencing the tests: address 3101 **FCT EarthFlt0/C** = ***OFF***.

Checking with Permissive Schemes

Prerequisites: **Teleprot. Dist.** is configured in address 121 to one of the comparison schemes using permissive signal, i.e. ***POTT*** or ***UNBLOCKING***; in addition, at address 2101 **FCT Telep. Dis.** ***ON*** is switched. The corresponding send and receive signals must be assigned to the corresponding binary output and input. For the echo function, the echo signal must be separately assigned to the transmit output.

Detailed information on the permissive scheme function is available in Section 2.6.

A simple check of the signal transmission path from one line end is possible via the echo function if these permissive schemes are used. The echo function must be activated at both line ends, i.e. address 2501 **FCT Weak Infeed** = ***ECHO only***; with the setting ***ECHO and TRIP*** a trip command may result at the remote end of the check!

A short-circuit is simulated outside Z1, with ***POTT*** or ***UNBLOCKING*** inside Z1B. This may be done with secondary injection test equipment. As the device at the opposite line end does not pick up, the echo function comes into effect there, and consequently a trip command is issued at the line end being tested.

If no trip command appears, the signal transmission path must be checked again, especially also the assignment of the echo signals to the transmit outputs.

In case of a phase-segregated transmission the above-mentioned checks are carried out for each phase. The correct phase allocation is also to be checked.

This test must be performed at both line ends, in the case of three terminal lines at each end for each signal transmission path.

The functioning of the echo delay time and the derivation of the circuit breaker switching status should also be tested at this time (the functioning of the protection at the opposite line end is tested):

The circuit breaker of the protected feeder must be opened. The circuit breaker at the opposite line end also must be opened. As described above, a fault is again simulated. A receive signal impulse delayed by somewhat more than twice the signal transmission time appears via the echo function at the opposite line end, and the device generates a trip command.

The circuit breaker at the opposite line end is now closed (while the isolators remain open). After simulation of the same fault, the receive and trip command appear again. In this case however, they are additionally delayed by the echo delay time of the device at the opposite line end (0.04 s presetting, address 2502 **Trip/Echo DELAY**).

If the response of the echo delay is opposite to the sequence described here, the operating mode of the corresponding binary input (H-active/L-active) at the opposite line end must be rectified.

The circuit breaker must be opened again.

These tests must be performed at both line ends, on a three terminal line at each line end for each transmission path. However, please finally observe the last margin heading„ Important for all procedures“!

Checking in Blocking Scheme

Requirements: **Teleprot. Dist.** is configured in address 121 to the comparison schemes using blocking signal, i.e ***BLOCKING***; in addition, at address 2101 **FCT Telep. Dis.** ***ON*** is switched. Naturally the corresponding send and receive signals must also be assigned to the corresponding binary output and input.

For more details about the function of the blocking scheme refer to Subsection 2.6. In the case of the blocking scheme, communication between the line ends is necessary.

On the transmitting end, a fault in the reverse direction is simulated, while at the receiving end a fault in Z1B but beyond Z1 is simulated. This can be achieved with a set of secondary injection test equipment at each end of the line. As long as the transmitting end is transmitting, the receiving end may not generate a trip signal, unless this results from a higher distance stage. After the simulated fault at the transmitting line end has been cleared, the receiving line end remains blocked for the duration of the transmit prolongation time of the transmitting line end (**Send Prolong.**, address 2103). If applicable, the transient blocking time of the receiving line end (**TrBlk BlockTime**, address 2110) appears additionally if a finite delay time **TrBlk Wait Time** (address 2109) has been set and exceeded.

In case of a phase-segregated transmission the above-mentioned checks are carried out for each phase. The correct phase allocation is also to be checked.

This test must be performed at both line ends, on a three terminal line at each line end for each transmission path. However, please finally observe the last margin heading „Important for all schemes“!

Checking at Permissive Underreach Transfer

Prerequisites: **Teleprot. Dist.** is configured in address 121 to the permissive underreach scheme , i.e. ***PUTT (Z1B)***. Furthermore, **FCT Telep. Dis.** is switched ***ON*** at address 2101. The corresponding send and receive signals must be assigned to the corresponding binary output and input.

Detailed information on the function of permissive underreach transfer is available in Subsection 2.6. Communication between the line ends is necessary.

On the transmitting end, a fault in zone Z1 must be simulated. This may be done with secondary injection test equipment.

Subsequently, on the receiving end when using ***PUTT (Z1B)***, a fault inside Z1B, but outside Z1 is simulated. Tripping takes place immediately (or in T1B), without signal transmission only in a higher distance stage. In case of direct transfer trip an immediate trip is always executed at the receiving end.

In case of a phase-segregated transmission the above-mentioned checks are performed for each phase. The correct phase allocation is also to be checked.

This test must be performed at both line ends, on a three terminal line at each line end for each transmission path. Finally, please observe the last margin heading „Important for All Schemes“!

Important for all Schemes

If the earth fault protection was disabled for the signal transmission tests, it may be re-enabled now. If setting parameters were changed for the test (e.g. mode of the echo function or timers for unambiguous observation of sequences), these must now be re-set to the prescribed values.

3.3.14 Testing of the Teleprotection System with Earth-fault Protection

This section is only relevant if the device is connected to an earthed system and earth fault protection is applied. The device must therefore be provided with the earth fault detection function according to its ordering code (16th MLFB position = 4 or 5 or 6 or 7). Which group of characteristics is to be available is determined during device configuration to `Earth Fault O/C` (address 131). Furthermore, the teleprotection must be used for the earth fault protection (address 132 `Teleprot. E/F` configured to one of the possible methods). If none of this is the case, this section is not relevant.

If the signal transmission path for the earth fault protection is the same path that was already tested in conjunction with the distance protection according to the previous Section, then this Section is of no consequence and may be skipped.

For the functional check of the earth fault protection signal transmission, the distance protection should be disabled, to avoid interference of the tests by signals from the distance protection: address 1201 **FCT Distance** = ***OFF***.

Checking with Permissive Schemes

Requirements: **Teleprot. E/F** is configured in address 132 to one of the comparison schemes using permissive signal, i.e. ***Dir.Comp.Pickup*** or ***UNBLOCKING***; in addition, at address 3201 **FCT Telep. E/F** ***ON*** is switched. The corresponding send and receive signals must be assigned to the corresponding binary output and input. For the echo function, the echo signal must be separately assigned to the transmit output.

Detailed information on the function of the permissive scheme is given in Section 2.8.

A simple check of the signal transmission path from one line end is possible via the echo circuit if these release techniques are used. The echo function must be activated at both line ends, i.e. address 2501 **FCT Weak Infeed** = ***ECHO only***; with the setting ***ECHO and TRIP*** at the remote end of the check a trip command may result!

An earth fault is simulated in the direction of the line. This may be done with secondary test equipment. As the device at the opposite line end does not pick up, the echo function comes into effect there, and consequently a trip command is generated at the line end being tested.

If no trip command appears, the signal transmission path must be checked again, especially also the assignment of the echo signals to the transmit outputs.

This test must be carried out at both line ends, in the case of three terminal lines at each end for each signal transmission path.

The functioning of the echo delay time and monitoring of the circuit breaker switching status must also be tested at this time if this has not already been done in the previous section (the operation of the protection at the opposite line end is checked):

The circuit breaker on the protected feeder must be opened, as must be the circuit breaker at the opposite line end. A fault is again simulated as before. A receive signal impulse delayed by somewhat more than twice the signal transmission time appears via the echo function at the opposite line end, and the device generates a trip command.

The circuit breaker at the opposite line end is now closed (while the isolators remain open). After simulation of the same fault, the receive and trip command appear again. In this case however, they are additionally delayed by the echo delay time of the device at the opposite line end (0.04 s presetting, address 2502 **Trip/Echo DELAY**).

If the response of the echo delay is contrary to the sequence described here, the operating mode of the corresponding binary input (H–active/L–active) at the opposite line end must be rectified.

The circuit breaker must be opened again.

This test must also be carried out at both line ends, in the case of three terminal lines at each line end and for each signal transmission path. Finally, please observe the last margin heading „Important for All Schemes“!

Checking in Blocking Scheme

Prerequisites: **Teleprot. E/F** is configured in address 132 to one of the comparison schemes using blocking signal, i.e ***BLOCKING***. Furthermore, **FCT Telep. E/F** is switched ***ON*** at address 3201. The corresponding send and receive signals must be assigned to the corresponding binary output and input.

For more details about the function of the blocking scheme refer to Section 2.8. In the case of the blocking scheme, communication between the line ends is necessary.

An earth fault in reverse direction is simulated at the transmitting line end. Subsequently, a fault at the receiving end in the direction of the line is simulated. This can be achieved with a set of secondary injection test equipment at each end of the line. As long as the transmitting end is transmitting, the receiving end may not generate a trip signal, unless this results from a higher distance stage. After the simulated fault at the transmitting line end is switched off, the receiving line end remains blocked for the duration of the transmit prolongation time of the transmitting line end (**Send Prolong.**, address 3203). If applicable, the transient blocking time of the receiving line end (**TrBlk BlockTime**, address 3210) is added if a finite delay time **TrBlk Wait Time** (address 3209) has been set and exceeded.

This test must be performed at both line ends, on a three terminal line at each line end for each transmission path. However, please finally observe the last margin heading „Important for All Schemes“!

Important for all Schemes

If the distance protection was switched off for the signal transmission tests, it may be switched on now. If setting parameters were changed for the test (e.g. mode of the echo function or timers for unambiguous observation of sequences), these must now be re-set to the prescribed values.

3.3.15 Check of the Signal Transmission for Breaker Failure Protection and/or End Fault Protection

If the transfer trip command for breaker failure protection or stub fault protection is to be transmitted to the remote end, this transmission must also be checked.

To check the transmission the breaker failure protection function is initiated by a test current (secondary) with the circuit breaker in the open position. Make sure that the correct circuit breaker reaction takes place at the remote end.

Each transmission path must be checked on lines with more than two ends.

3.3.16 Check of the Signal Transmission for Internal and External Remote Tripping

The 7SA522 provides the possibility to transmit a remote trip signal to the opposite line end if a signal transmission path is available for this purpose. This remote trip signal may be derived from both an internally generated trip signal as well as from any signal coming from an external protection or control device.

If an internal signal is used, the initiation of the transmitter must be checked. If the signal transmission path is the same and has already been checked as part of the previous sections, it need not be checked again here. Otherwise the initiating event is simulated and the response of the circuit breaker at the opposite line end is verified.

In the case of the distance protection, the permissive underreach scheme may be used to trip the remote line end. The procedure is then the same as was the case for permissive underreach (under „Checking with Permissive Underreach Transfer Trip“); however the received signal causes a direct trip.

For the remote transmission, the external command input is employed on the receiving line end; it is therefore a prerequisite that: **DTT Direct Trip** is set to ***Enabled*** in address 122 and **FCT Direct Trip** is set to ***ON*** in address 2201. If the signal transmission path is the same and has already been checked as part of the previous sections, it need not be checked again here. A function check is sufficient, whereby the externally derived command is executed. For this purpose, the external tripping event is simulated and the response of the circuit breaker at the opposite line end is verified.

3.3.17 Testing User-defined Functions

The device has a vast capability for allowing functions to be defined by the user, especially with the CFC logic. Any special function or logic added to the device must be checked.

A general procedure cannot in the nature of things be specified. Configuration of these functions and the set value conditions must be actually known beforehand and tested. Especially, possible interlocking conditions of the switching devices (circuit breakers, isolators, grounding electrodes) must be observed and checked.

3.3.18 Trip and Close Test with the Circuit Breaker

The circuit breaker and tripping circuits can be conveniently tested by the device 7SA522.

The procedure is described in detail in the SIPROTEC 4 System Description.

If the check does not produce the expected results, the cause may be established from the text in the display of the device or the PC. If necessary, the connections of the circuit breaker auxiliary contacts must be checked:

It must be noted that the binary inputs used for the circuit breaker auxiliary contacts must be assigned separately for the CB test. This means it is not sufficient that the auxiliary contacts are allocated to the binary inputs No. 351 to 353, 379 and 380 (according to the possibilities of the auxiliary contacts); additionally, the corresponding No. 366 to 368 or 410 and/or 411 must be allocated (according to the possibilities of the auxiliary contacts). In the CB test only the latter ones are analyzed. See also Section 2.20.2. Furthermore, the ready state of the circuit breaker for the CB test must be indicated to the binary input with No. 371.

3.3.19 Switching Test of the Configured Operating Equipment

Switching by Local Command

If the configured operating devices were not switched sufficiently in the hardware test already described, all configured switching devices must be switched on and off from the device via the integrated control element. The feedback information of the CB position injected via binary inputs should be read out and compared with the actual breaker position. For devices with graphic display this is easy to do with the control display.

The switching procedure is described in the SIPROTEC 4 System Description. The switching authority must be set in correspondence with the source of commands used. With the switching mode, you can choose between locked and unlocked switching. In this case, you must be aware that unlocked switching is a safety risk.

Switching from a Remote Control Centre

If the device is connected to a remote substation via a system (SCADA) interface, the corresponding switching tests may also be checked from the substation. Please also take into consideration that the switching authority is set in correspondence with the source of commands used.

3.3.20 Triggering Oscillographic Recording for Test

In order to verify the reliability of the protection relay even during inrush processes, closing tests can be carried out to conclude the commissioning process. Oscillograhpic records provide the maximum information about the behaviour of the protection relay.

Prerequisite

Along with the capability of storing fault recordings via pickup of the protection function, the 7SA522 also has the capability of capturing the same data when commands are given to the device via the DIGSI software, the serial interface, or a binary input. For the latter, the information „>Trig.Wave.Cap.“ must be allocated to a binary input. In this case, a fault record is triggered e.g. via binary input when the protected object is energized.

Such a test fault record triggered externally (i.e. not caused by pickup of a protection function) is processed like a normal oscillographic record, i.e. a fault log with number is generated which univocally identifies an oscillographic record. However, these recordings are not displayed in the trip log as they are not fault events.

Start Test Measurement Recording

To trigger test measurement recording with DIGSI, click on **Test** in the left part of the window. Double click in the list view the **Test Wave Form** entry (see Figure 3-33).

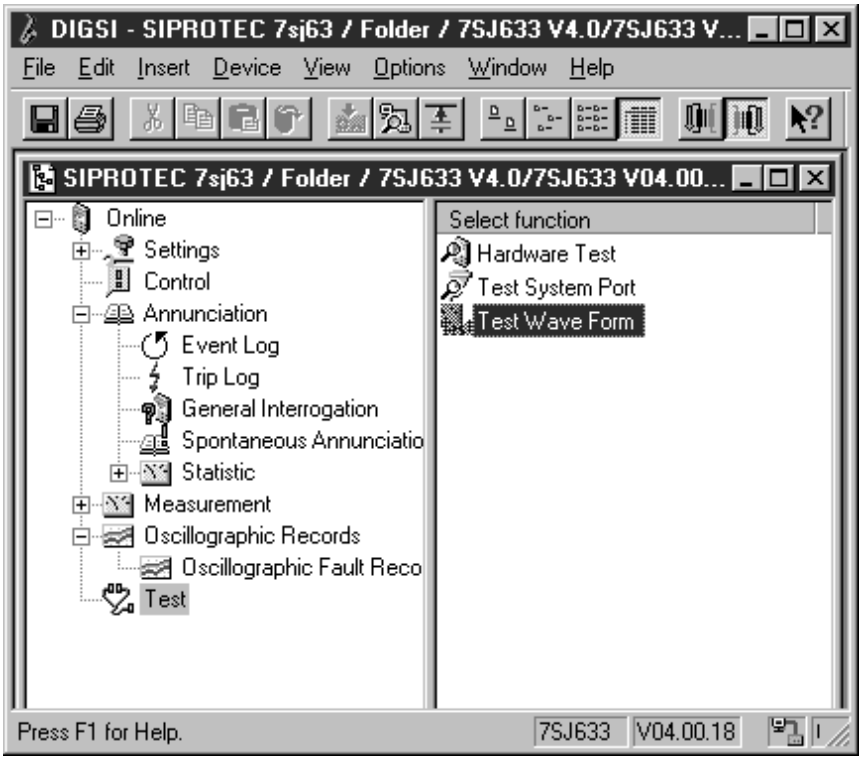

Figure 3-33 Triggering oscillographic recording with DIGSI — example

Oscillographic recording is immediately started. During the recording, an annunciation is output in the left area of the status line. Bar segments additionally indicate the progress of the procedure.

The SIGRA or the Comtrade Viewer program is required to view and analyse the oscillographic data.

3.4 Final Preparation of the Device

The used terminal screws must be tightened, including those that are not used. All the plug connectors must be correctly inserted.

Caution!

Do not apply force!

The tightening torques must not be exceeded as the threads and terminal chambers may otherwise be damaged!

The setting values should be checked again if they were changed during the tests. Check if protection, control and auxiliary functions to be found with the configuration parameters are set correctly (Section 2.1.1, Functional Scope). All desired functions must be switched ***ON***. Ensure that a copy of the setting values is stored on the PC.

Check the internal clock of the device. If necessary, set the clock or synchronize the clock if the element is not automatically synchronized. Further details on this subject are described in /1/.

The indication buffers are deleted under **Main Menu** → **Annunciation** → ***Set*** / ***Reset***, so that in the future they only contain information on actual events and states. The numbers in the switching statistics should be reset to the values that were existing prior to the testing.

The counters of the operational measured values (e.g. operation counter, if available) are reset under **Main Menu** → **Measurement** → ***Reset***.

Press the ESC key, several times if necessary, to return to the default display.

Clear the LEDs on the front panel by pressing the LED key, so that they only show real events and states. In this context, saved output relays are reset, too. Pressing the LED key also serves as a test for the LEDs on the front panel because they should all light when the button is pressed. If the LEDs display states relevant by that moment, these LEDs, of course, stay lit.

The green „RUN“ LED must light up, whereas the red „ERROR“ must not light up.

Close the protective switches. If test switches are available, then these must be in the operating position.

The device is now ready for operation.

■

Technical Data

4

This chapter presents the technical data of SIPROTEC 4 7SA522 device and its individual functions, including the limit values that must not be exceeded under any circumstances. The electrical and functional data of fully equipped devices are followed by the mechanical data, with dimensional drawings.

4.1	General	472
4.2	Distance Protection	484
4.3	Power Swing Detection (optional)	487
4.4	Distance Protection Teleprotection Schemes	488
4.5	Earth Fault Protection (optional)	489
4.6	Earth Fault Protection Teleprotection Schemes (optional)	499
4.7	Weak-infeed Tripping (classical)	500
4.8	Weak-infeed Tripping (French Specification)	501
4.9	Protection Data Interface and Communication Topology (optional)	502
4.10	External Direct and Remote Tripping	505
4.11	Time Overcurrent Protection	506
4.12	Instantaneous High-current Switch-onto-fault Protection	509
4.13	Automatic Reclosure (optional)	510
4.14	Synchronism and Voltage Check (optional)	511
4.15	Voltage Protection (optional)	513
4.16	Frequency Protection (optional)	516
4.17	Fault Locator	517
4.18	Circuit Breaker Failure Protection (optional)	518
4.19	Monitoring Functions	519
4.20	Transmission of Binary Information (optional)	521
4.21	User-defined Functions (CFC)	522
4.22	Additional Functions	526
4.23	Dimensions	529

4.1 General

4.1.1 Analogue Inputs and Outputs

Nominal Frequency	f_N	50 Hz or 60 Hz	(adjustable)

Current Inputs

Nominal current	I_{Nom}	1 A or 5 A
Power Consumption per Phase and Earth Path		
- at I_N = 1 A		Approx. 0.05 VA
- at I_N = 5 A		Approx. 0.3 VA
- for sensitive earth fault detection at 1A		Approx. 0.05 VA
Current Overload Capability per Current Input		
- thermal (rms)		500 A for 1 s 150 A for 10 s 4 · I_N continuous
- dynamic (pulse current)		1,250 A (half-cycle)
Current Overload Capability for Sensitive Earth Current Input		
- thermal (rms)		300 A for 1 s
		100 A for 10 s
		15 A continuous
- dynamic (pulse current)		750 A (half-cycle)

Voltage Inputs

Rated Voltage	U_T	80 V to 125 V	(adjustable)
Power consumption per phase	at 100 V	≤ 0.1 VA	
Voltage Overload Capability in Voltage Path per Input			
- thermal (rms)		230 V continuous	

4.1.2 Auxiliary voltage

DC Voltage

Voltage supply via integrated converter				
Rated auxiliary voltage U_{aux}-	DC 24 V/ 48 V	DC 60 V/110 V 125 V	DC 110 V/ 125 V/ 220 V/250 V	DC 220 V/ 250 V
Permissible voltage ranges	DC 19 V to 58 V	DC 48 V to 150 V	DC 88 V to 300 V	DC 176 V to 300 V
Superimposed AC ripple voltage, Peak to peak	≤ 15 % of the auxiliary nominal voltage			
Power input				
- quiescent			Approx. 5 W	
- energized	7SA522*-*A/E/J		Approx. 12 W	
	7SA522*-*C/G/L/N/Q/S		Approx. 15 W	
	7SA522*-*D/H/M/P/R/T/W		Approx. 18 W	
	7SA522*-*U		Approx. 20 W	
Plus approx. 1.5 W per interface module				
Bridging time for failure / short circuit of DC auxiliary voltage	≥ 50 ms at U_{aux} = 48 V and U_{aux} ≥ 110 V			
	≥ 20 ms at U_{aux} = 24 V and U_{aux} = 60 V			

AC Voltage

Voltage Supply via Integrated Converter		
Nominal Auxiliary Voltage AC U_{Aux}	AC 115 V	
Permissible voltage ranges	AC 92 V to 230 V	
Power Input		
- not energized		Approx. 7 VA
- energized	7SA522*-*A/E/J	Approx. 17 VA
	7SA522*-*C/G/L/N/Q/S	Approx. 20 VA
	7SA522*-*D/H/M/P/R/T/W	Approx. 23 VA
	7SA522*-*U	Approx. 25 VA
Plus approx. 1.5 W per Interface Module		
Bridging time for failure/short circuit of alternating auxiliary voltage	≥ 50 ms	

4.1.3 Binary Inputs and Outputs

Binary Inputs

Variant	Quantity	
7SA522*-*A/E/J	8 (configurable)	
7SA522*-*C/G/L/N/Q/S	16 (configurable)	
7SA522*-*U	22 (configurable)	
7SA522*-*D/H/M/P/R/T/W	24 (configurable)	
Rated voltage range	DC 24 V to 250 V in 3 ranges, bipolar	
Switching Thresholds	Switching Thresholds, adjustable voltage range with jumpers	
- for rated voltages	DC 24 V/48 V 60 V/110 V/125 V	U_{high} ≥ DC 19 V U_{low} ≤ DC 10 V
- for rated voltages	DC 110 V/125 V/220 V/250 V	U_{high} ≥ DC 88 V U_{low} ≤ DC 44 V
- for rated voltages	DC 220 V/250 V	U_{high} ≥ DC 176 V U_{low} ≤ DC 88 V
Current consumption, energized	Approx. 1.8 mA independent of the control voltage	
Maximum admissible voltage	DC 300 V	
Impulse filter on input	220 nF coupling capacitance at 220 V with recovery time > 60 ms	

Binary Outputs

Signalling / Command Relays (see also terminal assignments in Appendix A)					
Quantity and Data		**According to the Order Variant (allocatable)**			
Order Variant	**UL listed**	**NO Contact (normal)[1])**	**NO Contact (fast)[1])**	**NO/NC (select-able)[1])**	**NO contact (high-speed)[1])**
7SA522*-*A/E/J	x	7	7	1	-
7SA522*-*C/G/L	x	14	7	2	-
7SA522*-*N/Q/S	x	7	10	1	5
7SA522*-*D/H/M	x	21	7	3	-
7SA522*-*P/R/T	x	14	10	2	5
7SA522*-*U	x	30	7	6	-
7SA522*-*W	x	-	18	3	10
Switching capability	ON	1000 W/VA			1000 W/VA
	OFF	30 VA 40 W resistive 25 W/VA at L/R ≤ 50 ms			1000 W/VA
Switching voltage					
DC		250 V			
AC		250 V			200 V (max.)
Permissible current per contact (continuous)		5 A			
Permissible current per contact (close and hold) / pulse current		30 A for 0.5 s (NO contact)			
Total current on common path		5 A continuous 30 A for 0.5 s			
Operating time, approx.		8 ms	5 ms	8 ms	1 ms
Alarm relay [1])		With 1 NC contact or 1 NO contact (switchable)			
Switching capability	ON	1000 W/VA			
	OFF	30 VA 40 W resistive 25 W at L/R ≤ 50 ms			
Switching voltage		250 V			
Permissible current per contact		5 A continuous 30 A for 0.5 s			
[1]) UL-listed with the following rated data:					
		AC 1120 V		Pilot duty, B	
		AC 1240 V		Pilot duty, B	
		AC 1240 V		5 A General Purpose	
		DC 124 V		5 A General Purpose	
		DC 148 V		0.8 A General Purpose	
		DC 1240 V		0.1 A General Purpose	
		AC 1120 V		1/6 hp (4.4 FLA)	
		AC 1240 V		1/2 hp (4.9 FLA)	

4.1.4 Communication Interfaces

Protection Data Interface

See Section 4.9 „Protection Data Interfaces and Communication Topology“

Operator Interface

Connection	Front side, non-isolated, RS232, 9-pin D-subminiature female connector for connection of a PC
Operation	With DIGSI
Transmission rate	Min. 4800 Baud; max. 115200 Baud; Factory Setting: 38400 Baud; Parity: 8E1
Transmission distance	15 m / 50 feet

Service / Modem Interface (optional)

RS232/RS485/LWL Acc. to ordered variant		isolated interface for data transfer
	Operation	With DIGSI
RS232/RS485		
	Connection for Flush-Mounted Housing	Rear panel, mounting location „C“, 9-pole D-subminiature Female Connector Shielded data cable
	Connector for surface mounted case	Shielded data cable
	Up to release /DD	At two-tier terminal on the housing bottom
	Release /EE and higher	at the inclined housing on the case bottom; 9-pole D-subminiature Female Connector
	Test voltage	500 V; 50 Hz
	Transmission speed	Min. 4800 Baud; max. 115200 Baud Factory setting 38400 Baud
RS232		
	Bridgeable distance	15 m
RS485		
	Bridgeable distance	1,000 m
Fibre optic cable (FO)		
	FO connector type	ST connector
	Connection for Flush-Mounted Housing	Rear panel, slot „C“
	Connector for surface mounted case	In console housing at device bottom
	optical wavelength	λ = 820 nm
	Laser Class 1 according to EN 60825-1/-2	when using glass fiber 50 µm/125 µm or when using glass fibre 62.5 µm/125 µm
	Permissible Optical Link Signal Attenuation	max. 8 dB, with glass fibre 62.5 µm/125 µm
	Bridgeable distance	Max. 1.5 km
	Character idle state	Selectable, factory setting „Light off“

System Interface (optional)

RS232/RS485/LWL Profibus RS485 / Profibus optical fibre DNP3.0/RS485 DNP3.0/Optical Fibre Ethernet EN100 Acc. to ordered version	Isolated interface for data transfer to a control terminal	
RS232		
	Connection for panel flush mounting housing	Rear panel, mounting location „B“, 9-pin D-subminiature female connector
	Connection for panel surface mounting housing	
	Up to /DD	At the terminal on the case bottom
	/EE and higher	In console housing at case bottom 9-pin D-subminiature female connector
	Test voltage	500 V; 50 Hz
	Transmission speed	Min. 4800 Baud; max. 38400 Baud Factory setting 19200 Baud
	Transmission distance	Max. 15 m
RS485		
	Connection for panel flush mounting housing	Rear panel, mounting location „B“, 9-pin D-subminiature female connector
	Connection for panel surface mounting housing	
	Up to /DD	At the terminal on the case bottom
	/EE and higher	In console housing at case bottom 9-pin D-subminiature female connector
	Test voltage	500 V; 50 Hz
	Transmission Speed	Min. 4800 Bd, max. 38400 Bd Factory setting 19200 Bd
	Transmission distance	Max. 1 km
Fibre optics (FO)		
	FO connector type	ST connector
	Connection for panel flush mounting housing	Rear panel, mounting location „B“
	For Panel Surface-Mounted Housing	In console housing at case bottom
	Optical wavelength	λ = 820 nm
	Laser Class I according to EN 60825-1/-2	when using glass fiber 50 µm/125 µm or when using glass fibre 62.5 µm/125 µm
	Permissible optical signal attenuation	max. 8 dB, with glass fibre 62.5 µm/125 µm
	Transmission distance	Max. 1.5 km
	Character idle state	Selectable: factory setting „Light off“

Profibus RS 485 (FMS and DP)		
	Connection for panel flush mounting housing	Rear panel, mounting location „B“, 9-pin D-subminiature female connector
	Connection for panel surface mounting housing	
	Up to /DD	At the terminal on the case bottom
	/EE and higher	In console housing at case bottom 9-pin D-subminiature female connector
	Test voltage	500 V; 50 Hz
	Transmission speed	Up to 12 MBaud
	Transmission distance	1000 m at ≤ 93.75 kBaud 500 m at ≤ 187.5 kBaud 200 m at ≤ 1.5 MBaud 100 m at ≤ 12 MBaud
Profibus Optical (FMS and DP)		
	FO connector type	ST connector single ring / double ring FMS: depending on ordered version; DP: only double ring available
	Connection for panel flush mounting housing	Rear panel, mounting location „B“
	Connection for panel surface mounting housing	Please use version with Profibus RS485 in the console housing at the housing bottom as well as separate electrical/optical converter.
	Transmission speed	Conversion by means of external OLM up to 1.5 MBaud ≥ 500 MBaud for normal version ≤ 57600 Baud with detached operator panel
	Recommended speed:	> 500 kBd
	Optical wavelength	λ = 820 nm
	Laser Class 1 according to EN 60825-1/-2	when using glass fiber 50 µm/125 µm or when using glass fibre 62.5 µm/125 µm
	Permissible optical signal attenuation	max. 8 dB, with glass fibre 62.5 µm/125 µm
	Transmission distance between two modules at redundant optical ring topology and optical fiber 62.5/125 µm	2 m with plastic fibre 500 kB/s max. 1.6 km 1500 kB/s 530 m (1738 ft.)
	Neutral light position (status for "No character")	Light OFF
	Max. number of modules in optical rings at 500 kB/s or 1500 kB/s	41
DNP3.0/RS485		
	Connection for panel flush mounting housing	Rear panel; mounting location „B“; 9-pole D-subminiature female connector
	Connection for panel surface mounting housing	In console housing
	Test voltage	500 V; 50 Hz
	Transmission speed	Up to 19200 bauds
	Transmission distance	Max. 1 km

DNP3.0/Optical Fibre		
	FO connector type	ST-Connector Receiver/Transmitter
	Connection for panel flush mounting housing	Rear panel, slot „B“
	Connection for panel surface mounting housing	In console housing
	Transmission speed	Up to 19200 bauds
	Optical wavelength	λ = 820 nm
	Laser Class 1 according to EN 60825-1/-2	when using glass fibre 50 µm/125 µm or when using glass fibre 62.5 µm/125 µm
	Permissible optical signal attenuation	max. 8 dB, with glass fibre 62.5 µm/125 µm
	Transmission distance	Max. 1.5 km
Ethernet electrical (EN100) for IEC 61850 and DIGSI		
	Connection for panel flush mounting housing	Rear panel, mounting location „B“ 2 x RJ45 female connector 100BaseT acc. to IEEE802.3
	Connection for panel surface mounting housing	in console housing
	Test voltage (female connector)	500 V; 50 Hz
	Transmission speed	100 Mbits/s
	Transmission distance	20 m (65 ft)

Time Synchronisation Interface

Time synchronization	DCF77/IRIG B signal (telegram format IRIG-B000)
Connection for panel flush mounting housing	Rear panel, slot „A“ 9-pin D-subminiature female connector
Connection for surface mounted case	At the double-deck terminal on the case bottom
Signal nominal voltages	Selectable 5 V, 12 V or 24 V
Test voltage	500 V; 50 Hz

Signal levels and burdens DCF77/IRIG-B:			
	Nominal Signal Voltage		
	5 V	**12 V**	**24 V**
U_{IHigh}	6.0 V	15.8 V	31 V
U_{ILow}	1.0 V at I_{ILow} = 0.25 mA	1.4 V at I_{ILow} = 0.25 mA	1.9 V at I_{ILow} = 0.25 mA
I_{IHigh}	4.5 mA to 9.4 mA	4.5 mA to 9.3 mA	4.5 mA to 8.7 mA
R_I	890 Ω at U_I = 4 V	1930 Ω at U_I = 8.7 V	3780 Ω at U_I = 17 V
	640 Ω at U_I = 6 V	1700 Ω at U_I = 15.8 V	3560 Ω at U_I = 31 V

4.1.5 Electrical Tests

Specifications

Standards:	IEC 60255 (product standards) IEEE Std C37.90.0/.1/.2 UL 508 VDE 0435 For more standards see also individual functions

Insulation Test

Standards:	IEC 60255-5 and IEC 60870-2-1
High voltage test (routine test) All circuits except power supply, Binary Inputs, High Speed Outputs, Communication Interface and Time Synchronization Interfaces	2.5 kV (rms), 50 Hz
High voltage test (routine test) Auxiliary voltage, binary inputs and high speed outputs	DC 3.5 kV
High voltage test (routine test) only isolated communication and time synchronization interfaces	500 V (rms), 50 Hz
Impulse voltage test (type test) All Circuits Except Communication and Time Synchronization Interfaces, Class III	5 kV (peak), 1.2/50 µs, 0.5 Ws, 3 positive and 3 negative impulses at intervals of 5 s

EMC Tests for Interference Immunity (Type Tests)

Standards:	IEC 60255-6 and -22 (product standards) EN 61000-6-2 (generic standard) VDE 0435 part 301DIN VDE 0435-110
High frequency test IEC 60255-22-1, Class III and VDE 0435 Section 303, Class III	2.5 kV (Peak); 1 MHz; τ = 15 µs; 400 surges per s; test duration 2 s; R_i = 200 Ω
Electrostatic discharge IEC 60255-22-2, Class IV and IEC 61000-4-2, Class IV	8 kV contact discharge; 15 kV air discharge, both polarities; 150 pF; R_i = 330 Ω
Irradiation with HF field, frequency sweep IEC 60255-22-3, Class III IEC 61000-4-3, Class III	10 V/m; 80 MHz to 1000 MHz: 80 % AM; 1 kHz 10 V/m; 800 MHz to 960 MHz: 80 % AM; 1 kHz 20 V/m; 1.4 GHz to 2.0 GHz 80 % AM; 1 kHz
Irradiation with HF field, single frequencies IEC 60255-22-3 IEC 61000-4-3, Class III –amplitude-modulated –pulse-modulated	 10 V/m 80 MHz; 160 MHz; 450 MHz; 900 MHz; 80 % AM; 1 kHz; duty cycle > 10 s 900 MHz; 50 % PM, repetition frequency 200 Hz
Fast transient disturbances Burst IEC 60255-22-4 and IEC 61000-4-4, Class IV	4 kV; 5 ns/50 ns; 5 kHz; burst length = 15 ms; repetition 300 ms; both polarities; R_i = 50 Ω; test duration 1 min
High energy surge voltages (SURGE), IEC 61000-4-5 installation Class 3 - Auxiliary voltage – Analog measuring inputs, binary inputs, relay outputs	Pulse: 1.2 µs/50 µs Common mode: 2 kV; 12 Ω; 9 µF Diff. mode: 1 kV; 2 Ω; 18 µF Common mode: 2 kV; 42 Ω; 0.5 µF diff. mode: 1 kV; 42 Ω; 0.5 µF

Line conducted HF, amplitude modulated IEC 61000-4-6, Class III	10 V; 150 kHz to 80 MHz; 80 % AM; 1 kHz
Power system frequency magnetic field IEC 60255-6 IEC 61000-4-8, Class IV	 0.5 mT; 50 Hz, 30 A/m continuous; 300 A/m for 3 s; 50 Hz
Oscillatory surge withstand capability IEEE Std C37.90.1	2.5 kV (Peak); 1 MHz; τ = 15 µs; 400 Surges per s; test duration 2 s; R_i = 200 Ω
Fast transient surge withstand cap. IEEE Std C37.90.1	4 kV; 5 ns/50 ns; 5 kHz; burst length = 15 ms; repetition rate 300 ms; both polarities: R_i = 50 Ω; test duration 1 min
Radiated electromagnetic interference IEEE Std C37.90.2	35 V/m; 25 MHz to 1000 MHz
Damped oscillations IEC 60694, IEC 61000-4-12	2.5 kV (peak value), polarity alternating 100 kHz, 1 MHz, 10 MHz and 50 MHz, R_i = 200 Ω

EMC Tests for Interference Emission (Type Test)

Standard:	EN 61000-6-3 (generic standard)
Radio noise voltage to lines, only auxiliary voltage IEC-CISPR 22	150 kHz to 30 MHz Limit class B
Interference field strength IEC-CISPR 22	30 MHz to 1000 MHz Limit class B
Harmonic currents on the network lead at AC 230 V IEC 61000-3-2	Class A limits are observed.
Voltage fluctuations and flicker on the network lead at AC 230 V IEC 61000-3-3	Limits are observed

4.1.6 Mechanical Tests

Vibration and Shock Resistance during Stationary Operation

Standards:	IEC 60255-21 and IEC 60068
Oscillation IEC 60255-21-1, Class 2 IEC 60068-2-6	Sinusoidal 10 Hz to 60 Hz: ± 0.075 mm amplitude; 60 Hz to 150 Hz: 1 g Acceleration Frequency sweep 1 octave/min 20 cycles in 3 orthogonal axes
Shock IEC 60255-21-2, Class 1 IEC 60068-2-27	Semi-sinusoidal 5 g acceleration, duration 11 ms, each 3 shocks (in both directions of the 3 axes)
Seismic vibration IEC 60255-21-3, Class 1 IEC 60068-3-3	Sinusoidal 1 Hz to 8 Hz: ± 3.5 mm amplitude (horizontal axis) 1 Hz to 8 Hz: ± 1.5 mm amplitude (vertical axis) 8 Hz to 35 Hz: 1 g acceleration (horizontal axis) 8 Hz to 35 Hz: 0.5 g acceleration (vertical axis) Frequency sweep 1 octave/min 1 cycle in 3 orthogonal axes

Vibration and Shock Resistance during Transport

Standards:	IEC 60255-21 and IEC 60068
Oscillation IEC 60255-21-1, Class 2 IEC 60068-2-6	Sinusoidal 5 Hz to 8 Hz: ± 7.5 mm Amplitude; 8 Hz to 150 Hz: 2 g acceleration frequency sweep 1 octave/min 20 cycles in 3 orthogonal axes
Shock IEC 60255-21-2, Class 1 IEC 60068-2-27	Semi-sinusoidal 15 g acceleration, duration 11 ms, each 3 shocks (in both directions of the 3 axes)
Continuous shock IEC 60255-21-2, Class 1 IEC 60068-2-29	Semi-sinusoidal 10 g acceleration, duration 16 ms, 1000 shocks each in both directions of the 3 axes

4.1.7 Climatic Stress Tests

Temperatures

Standards:	IEC 60255-6
Type tested (acc. IEC 60086-2-1 and -2, Test Bd,	-25 °C to +85 °C or -13 °F to +185 °F
Admissible temporary operating temperature (tested for 96 h)	-20 °C to +70 °C or -4 °F to +158 °F (legibility of display may be restricted from +55 °C or 131 °F)
Recommended for permanent operation (according to IEC 60255-6)	-5 °C to +55 °C or 23 °F to +131 °F If max. half of the inputs and outputs are subjected to the max. permissible values
Limit temperatures for storage	-25 °C to +55 °C or -13 °F to +131 °F
Limit temperatures during transport	-25 °C to +70 °C or -13 °F to +158 °F
Storage and transport of the device with factory packaging!	
[1] Limit temperatures for normal operation (i.e. output relays not energized)	-20 °C to +70 °C or -4 °F to +158 °F
[1] Limit temperatures under maximum load (max. cont. admissible input and output values)	–5 °C to +40 °C for $^1/_2$ and $^1/_1$ housing

[1] UL-certified according to Standard 508 (Industrial Control Equipment)

Humidity

Admissible humidity	Annual average ≤ 75 % relative humidity; On 56 days of the year up to 93% relative humidity. Condensation must be avoided in operation!
It is recommended that all devices be installed so that they are not exposed to direct sunlight nor subject to large fluctuations in temperature that may cause condensation to occur.	

4.1.8 Deployment Conditions

The protection device is designed for installation in normal relay rooms and plants, so that electromagnetic immunity is ensured if installation is done properly.

In addition the following is recommended:

- Contacts and relays operating within the same cabinet or on the same relay board with digital protection equipment, should be in principle provided with suitable surge suppression components.
- For substations with operating voltages of 100 kV and above, all external cables shall be shielded with a conductive shield earthed at both ends. For substations with lower operating voltages, no special measures are normally required.
- For substations with lower operating voltages, no special measures are normally required. When removed, many components are electrostatically endangered; when handling the EEC standards (standards for **E**lectrostatically **E**ndangered **C**omponents) must be observed. The modules, boards, and device are not endangered when the device is completely assembled.

4.1.9 Certifications

UL listing		**UL recognition**	
7SA522*-*A***-****	Models with threaded terminals	7SA522*-*J***-****	Models with plug–in terminals
7SA522*-*C***-****		7SA522*-*L***-****	
7SA522*-*D***-****		7SA522*-*M***-****	
7SA522*-*U***-****			
7SA522*-*W***-****			

4.1.10 Construction

Housing	7XP20
Dimensions	See dimensional drawings, Section 4.23

Device (for maximum number of components)	Size	Weight
For panel flush mounting	$^1/_2$	6 kg / 13.2 lb
	$^1/_1$	10 kg / 22.04 lb
For panel surface mounting	$^1/_2$	11 kg / 24.3 lb
	$^1/_1$	19 kg / 41.9 lb

Degree of protection according to IEC 60529		
For equipment of the panel surface mounting housing		IP 51
For equipment of the panel flush-mounting housing		
	Front	IP 51
	Rear	IP 50
For human safety		IP 2x with cover
UL-certification conditions		Type 1 for front panel mounting

4.2 Distance Protection

Earth Impedance Ratio

R_E/R_L	-0.33 to 7.00	Increments 0.01
X_E/X_L	-0.33 to 7.00	Increments 0.01
	Separate for first and higher zones	
K_0	0.000 to 4.000	Increments 0.001
PHI (K_0)	-135.00° to +135.00°	
	Separate for first and higher zones	
The matching factors for earth impedance are valid also for fault locating.		

Mutual Impedance Ratio

R_M/R_L	0.00 to 8.00	Increments 0.01
X_M/X_L	0.00 to 8.00	Increments 0.01
The matching factors for the mutual impedance ratio are valid also for fault locating.		

Phase preference

For double earth fault in earthed net	Block leading phase-earth Block lagging phase-earth Release all associated loops Release only phase-to-earth loops Release of phase-to-phase loops
For double earth fault in isolated or resonant-earthed systems	L3(L1) acyclic L1(L3) acyclic L2(L1) acyclic L1(L2) acyclic L3(L2) acyclic L2(L3) acyclic L3(L1) acyclic L1(L3) acyclic All associated loops

Earth fault detection

Earth current $3I_0>$	for I_N = 1 A	0.05 A to 4.00 A	Increments 0.01 A
	for I_N = 5 A	0.25 A to 20.00 A	
Earth voltage $3U_0>$		1 V to 100 V; ∞	Increments 1 V
Dropout to pickup ratio		Approx. 0.95	
Measuring tolerances for sinusoidal measured values		± 5 %	

Distance Measurement

Characteristic		Polygonal or MHO characteristic; 6 independent zones and 1 controlled zone	
Setting ranges polygon:			
I_{Ph}> = min. current, phases	for I_N = 1 A	0.05 A to 4.00 A	Increments 0.01 A
	for I_N = 5 A	0.25 A to 20.00 A	
X = reactance reach	for I_N = 1 A	0.050 Ω up to 600000 Ω	Increments 0.001 Ω
	for I_N = 5 A	0.010 Ω up to 120000 Ω	
R = resistance tolerance phase-phase	for I_N = 1 A	0.050 Ω to 600,000 Ω	Increments 0.001 Ω
	for I_N = 5 A	0.010 Ω to 120,000 Ω	
RE = resistance tolerance phase-earth	for I_N = 1 A	0.050 Ω up to 600000 Ω	Increments 0.001 Ω
	for I_N = 5 A	0.010 Ω to 120,000 Ω	
φ_{Line} = line angle		10° to 89°	In increments of 1°
φ_{Dist} = angle of distance protection characteristic		30° to 90°	In increments of 1°
α_{Pol} = tilt angle for 1st zone		0° to 30°	In increments of 1°
Direction determination for polygonal characteristic:			
For all types of faults		With phase-true, memorized or cross-polarized voltages	
Directional sensitivity		Dynamically unlimited stationary approx. 1 V	
Each zone can be set to operate in forward or reverse direction, non-directional or ineffective.			
Setting ranges of the MHO characteristic:			
I_{Ph}> = min. current, phases	for I_N = 1 A	0.05 A to 4.00 A	Increments 0.01 A
	for I_N = 5 A	0.25 A to 20.00 A	
Z_r = impedance range	for I_N = 1 A	0.050 Ω to 200,000 Ω	Increments 0.001 Ω
	for I_N = 5 A	0.010 Ω to 40,000 Ω	
φ_{Line} = line angle		10° to 89°	In increments of 1°
φ_{Dist} = angle of distance protection characteristic		30° to 90°	Increments 1°
Polarization		With memorized or cross-polarized voltages	
Each zone can be set to operate in forward or reverse direction or ineffective.			
Load trapezoid:			
R_{load} = minimum load resistance	for I_N = 1 A	0,050 Ω to 600,000 Ω; ∞	Increments 0.001 Ω
	for I_N = 5 A	0.010 Ω to 120,000 Ω; ∞	
φ_{load} = maximum load angle		20° to 60°	In increments of 1°
Drop-off to pick-up ratio			
– currents		Approx. 0.95	
– impedances		Approx. 1.06	
Measured value correction		Mutual impedance matching for parallel lines	
Measuring tolerances for sinusoidal measured values		$\left\|\frac{\Delta X}{X}\right\| \le 5\ \%$ for $30° \le \varphi_k \le 90°$ $\left\|\frac{\Delta R}{R}\right\| \le 5\ \%$ for $0° \le \varphi_k \le 60°$ $\left\|\frac{\Delta Z}{Z}\right\| \le 5\ \%$ for $-30° \le \varphi_k - \varphi_{Line} \le 30°$	

Times

Shortest trip time	Approx. 17 ms (50 Hz) /15 ms (60 Hz) with fast relay and Approx. 12 ms (50 Hz) /10 ms (60 Hz) with high-speed relay	
Dropout time	Approx. 30 ms	
Stage timers	0.00 s to 30.00 s; ∞ for all zones; separate time setting possibilities for single-phase and multi-phase faults for the zones Z1, Z2, and Z1B	Increments 0.01 s
Time expiry tolerances	1 % of setting value or 10 ms	
The set times are pure delay times with definite time protection.		

Emergency Operation

In case of measured voltage failure, e.g. voltage transformer mcb trip see Section 4.11 „Time Overcurrent Protection “

4.3 Power Swing Detection (optional)

Power swing detection	Rate of change of the impedance phasor and observation of the impedance trajectory
Maximum power swing frequency	Approx. 10 Hz
Power swing blocking programs	Blocking of Z1 and Z1B
	Blocking of Z2 and higher zones
	Blocking of Z1 and Z2
	Block all zones
Power swing trip	Trip following instable power swings (out-of-step)

4.4 Distance Protection Teleprotection Schemes

Operating Mode

For two line ends	With one channel for each direction or with three channels for each direction for phase segregated transmission
For three line ends	With one channel for each direction or connection

Underreach Transfer Trip Schemes

Method	Transfer trip with overreaching zone Z1B Direct transfer trip	
Send signal prolongation	0.00 s to 30.00 s	Increments 0.01 s

Underreach Schemes via a Protection Data Interface (optional)

Phase-segregated for two or three line ends		
Method	Transfer trip with overreaching zone Z1B	
Send signal prolongation	0.00 s to 30.00 s	Increments 0.01 s

Overreach Schemes

Method	Permissive Overreach Transfer Trip (POTT) (with overreaching zone Z1B) Unblocking (with overreaching zone Z1B) Blocking (with overreaching zone Z1B)	
Send signal prolongation	0.00 s to 30.00 s	Increments 0.01 s
Enable delay	0.000 s to 30.000 s	Increments 0.001 s
Transient blocking time	0.00 s to 30.00 s	Increments 0.01 s
Wait time for transient blocking	0.00 s to 30.00 s; ∞	Increments 0.01 s
Echo delay time	0.00 s to 30.00 s	Increments 0.01 s
Echo impulse duration	0.00 s to 30.00 s	Increments 0.01 s
Time expiry tolerances	1 % of setting value or 10 ms	
The set times are pure delay times		

Overreach Schemes via Protection Data Interface (optional)

Phase-segregated for two or three line ends		
Method	Permissive Overreach Transfer Trip (POTT) (with overreaching zone Z1B)	
Send signal prolongation	0.00 s to 30.00 s	Increments 0.00 s
Enable delay	0.000 s to 30.000 s	Increments 0.001 s
Transient blocking time	0.00 s to 30.00 s	Increments 0.01 s
Wait time for transient blocking	0.00 s to 30.00 s; ∞	Increments 0.01 s
Echo delay time	0.00 s to 30.00 s	Increments 0.01 s
Echo impulse duration	0.00 s to 30.00 s	Increments 0.01 s
Time expiry tolerances	1 % of setting value or 10 ms	
The set times are pure delay times with definite time protection.		

4.5 Earth Fault Protection (optional)

Characteristics

Definite time stages	$3I_0$>>>, $3I_0$>>, $3I_0$>
Inverse time stage (IDMT)	$3I_{0P}$ one of the characteristics according to Figure 4-1 to Figure 4-4 can be selected
Voltage-dependent stage (U_0 inverse)	Characteristics according to Figure 4-5
Zero-sequence power protection	Characteristics according to Figure 4-6

Very high set current stage

High current pickup $3I_0$>>>	for I_N = 1 A	0.05 A to 25.00 A	Increments 0.01 A
	for I_N = 5 A	0.25 A to 125.00 A	
Delay $T_{3I0>>>}$		0.00 s to 30.00 s or ∞ (ineffective)	Increments 0.01 s
Dropout ratio		Approx. 0.95 for $I/I_N \geq 0.5$	
Pickup time (fast relays/high-speed relays)		Approx. 30 ms/25 ms	
Dropout time		Approx. 30 ms	
Tolerances	Current	3 % of setting value or 1 % nominal current	
	Time	1 % of setting value or 10 ms	
The set times are pure delay times with definite time protection.			

High-current Stage

Pickup value $3I_0$>>	for I_N = 1 A	0.05 A to 25.00 A	Increments 0.01 A
	for I_N = 5 A	0.25 A to 125.00 A	
Delay $T_{3I0>>}$		0.00 s to 30.00 s or ∞ (ineffective)	Increments 0.01 s
Dropout ratio		Approx. 0.95 for $I/I_N \geq 0.5$	
Pickup time (fast relays/high-speed relays)		Approx. 30 ms/25 ms	
Dropout time		Approx. 30 ms	
Tolerances	Current	3 % of setting value or 1 % nominal current	
	Time	1 % of setting value or 10 ms	
The set times are pure delay times with definite time protection.			

Overcurrent stage

Pickup value $3I_0>$	for I_N = 1 A	0.05 A to 25.00 A or 0.003 A to 25.000 A	Increments 0.01 A Increments 0.001 A
	for I_N = 5 A	0.25 A to 125.00 A or 0.015 A to 125.000 A	Increments 0.01 A Increments 0.001 A
Delay $T_{3I0>}$		0.00 s to 30.00 s or ∞ (ineffective)	Increments 0.01 s
Dropout ratio		Approx. 0.95 for $I/I_N \geq 0.5$	
Pickup time (fast relays/high-speed relays) (1.5 set value) (2.5 set value)		 Approx. 40 ms/35 ms Approx. 30ms/25 ms	
Dropout time		Approx. 30 ms	
Tolerances	Current	3 % of setting value or 1 % nominal current	
	Time	1 % of setting value or 10 ms	
The set times are pure delay times with definite time protection.			

Inverse Current Stage (IEC)

Pickup value $3I_{0P}$	for I_N = 1 A	0.05 A to 25.00 A or 0.003 A to 25.000 A	Increments 0.01 A Increments 0.001 A
	for I_N = 5 A	0.25 A to 125.00 A or 0.015 A to 125.000 A	Increments 0.01 A Increments 0.001 A
Time factor T_{3I0P}		0.05 s to 3.00 s or ∞ (ineffective)	Increments 0.01 s
Additional time delay $T_{3I0P\ add}$		0.00 s to 30.00 s or ∞ (ineffective)	Increments 0.01 s
Characteristics		See Figure 4-1	
Tolerances			
Pickup and dropout thresholds $3I_{0p}$		3 % of setting value, or 1 % nominal current	
Pickup time for $2 \leq I/3I_{0P} \leq 20$ and $T_{3I0P} \geq 1$ s		5 % of set value ± 15 ms	
Defined times		1 % of set value or 10 ms	

Inverse Current Stage (ANSI)

Pickup value $3I_{0P}$	for I_N = 1 A	0.05 A to 25.00 A or 0.003 A to 25.000 A	Increments 0.01 A Increments 0.001 A
	for I_N = 5 A	0.25 A to 125.00 A or 0.015 A to 125.000 A	Increments 0.01 A Increments 0.001 A
Time factor D_{3I0P}		0.50 s to 15.00 s or ∞ (ineffective)	Increments 0.01 s
Additional time delay $T_{3I0P\ add}$		0.00 s to 30.00 s or ∞ (ineffective)	Increments 0.01 s
Characteristics		See Figure 4-2 and 4-3	
Tolerances			
Pickup and dropout thresholds $3I_{0p}$		3 % of set value, or 1 % nominal current	
Pickup time for 2 ≤ $I/3I_{0P}$ ≤ 20 and D_{3I0P} ≥ 1 s		5 % of set value ± 15 ms	
Defined times		1 % of set value or 10 ms	

Inverse Current Stage (logarithmic inverse)

Pickup value $3I_{0P}$	for I_N = 1 A	0.05 A to 25.00 A or 0.003 A to 25.000 A	Increments 0.01 A Increments 0.001 A
	for I_N = 5 A	0.25 A to 125.00 A or 0.015 A to 125.000 A	Increments 0.01 A Increments 0.001 A
Start current factor $3I_{0P\ FACTOR}$		1.0 to 4.0	Increments 0.1
Time factor T_{3I0P}		0.05 s to 15.00 s; ∞	Increments 0.01 s
Maximum time $T_{3I0P\ max}$		0.00 s to 30.00 s	Increments 0.01 s
Minimum time $T_{3I0P\ min}$		0.00 s to 30.00 s	Increments 0.01 s
Additional time delay $T_{3I0P\ add}$		0.00 s to 30.00 s or ∞ (ineffective)	Increments 0.01 s
Characteristics		See Figure 4-4	
Tolerances			
Pickup and dropout thresholds $3I_{0p}$		3 % of set value, or 1 % nominal current	
Pickup time for 2 ≤ $I/3I_{0P}$ ≤ 20 and T_{3I0P} ≥ 1 s		5 % of set value ± 15 ms	
Defined times		1 % of setting value or 10 ms	

Zero Sequence Voltage Stage (U0 inverse)

Pickup value $3I_{0P}$	for I_N = 1 A	0.05 A to 25.00 A or 0.003 A to 25.000 A	Increments 0.01 A Increments 0.001 A
	for I_N = 5 A	0.25 A to 125.00 A or 0.015 A to 125.000 A	Increments 0.01 A Increments 0.001 A
Pickup value $3U_0$>		1.0 V to 10.0 V	Increments 0.1 V
Voltage factor $U_{0\ inv.\ minimal}$		0.1 V to 5.0 V	Increments 0.1 V
Additional time delay	$T_{directional}$	0.00 s to 32.00 s	Increments 0.01 s
	$T_{non\text{-}directional}$	0.00 s to 32.00 s	Increments 0.01 s
Characteristics		See Figure 4-5	
Tolerances times		1 % of setting value or 10 ms	
Dropout ratio	Current	Approx. 0.95 for $I/I_N \geq 0.5$	
	Voltage	Approx 0.95 for $3U_0 \geq 1$ V	

Zero Sequence Output Stage (power stage)

Pickup value $3I_{0P}$	for I_N = 1 A	0.05 A to 25.00 A or 0.003 A to 25,000 A	Increments 0.01 A Increments 0.001 A
	for I_N = 5 A	0.25 A to 125.00 A or 0.015 A to 125,000 A	Increments 0.01 A Increments 0.001 A
Pickup value S FORWARD	for I_N = 1 A	0.1 VA to 10.0 VA	Increments 0.1 VA
	for I_N = 5 A	0.5 VA to 50.0 VA	
Additional time delay $T_{3I0P\ add}$		0.00 s to 30.00 s; ∞	Steps 0.01 s
Characteristics		(see Figure 4-6)	
Tolerances pickup values		1 % of set value at sensitive earth current transformer	
Tolerances times		5 % of set value or 15 ms at sensitive earth current transformer 6 % of set value or 15 ms at normal earth current transformer / without earth current transformer	

Inrush Restraint

Second harmonic content for inrush		10 % to 45 %	Increments 1 %
		Referred to fundamental wave	
Inrush blocking is cancelled above	for I_N = 1 A	0.50 A to 25.00 A	Increments 0.01 A
	for I_N = 5 A	2.50 A to 125.00 A	
Inrush restraint may be switched effective or ineffective for each individual stage.			

Determination of Direction

Each zone can be set to operate in forward or reverse direction, non-directional or ineffective.			
Direction measurement		With I_E (= 3 I_0) and 3 U_0 and I_Y or I_2 and U_2	
		with I_E (= 3 I_0) and 3 U_0 and I_Y	
		With I_E (= 3 I_0) and I_Y (starpoint current of a power transformer)	
		With I_2 and U_2 (negative sequence quantities)	
		With zero-sequence power	
Limit values			
Displacement voltage $3U_0$>		0.5 V to 10.0 V	Increments 0.1 V
Starpoint current of a power transformer I_Y>	for I_N = 1 A	0.05 A to 1.00 A	Increments 0.01 A
	for I_N = 5 A	0.25 A to 5.00 A	
Negative sequence current $3I_2$>	for I_N = 1 A	0.05 A to 1.00 A	Increments 0.01 A
	for I_N = 5 A	0.25 A to 5.00 A	
Negative sequence voltage $3U_2$>		0.5 V to 10.0 V	Increments 0.1 V
"Forward" angle			
Capacitive alpha		0° to 360°	Increments 1°
Inductive beta		0° to 360°	Increments 1°
Tolerances pickup values		10 % of set value or 5 % of nominal current or 0.5 V	
Tolerance forward angle		5°	
Re-orientation time after direction change		Approx. 30 ms	

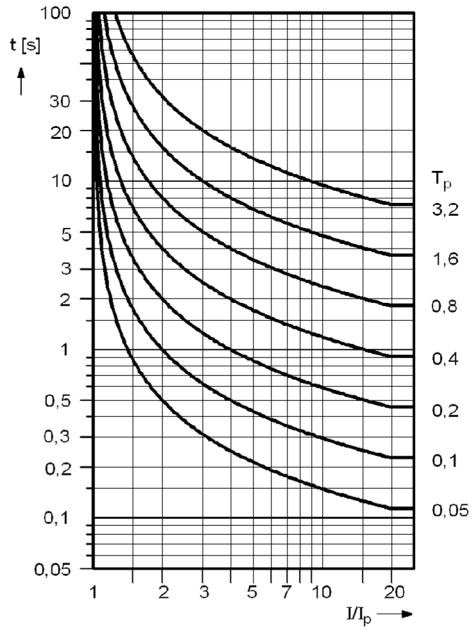

Normal Inverse:
(Type A)

$$t = \frac{0,14}{(I/I_p)^{0,02} - 1} \cdot T_p \quad [s]$$

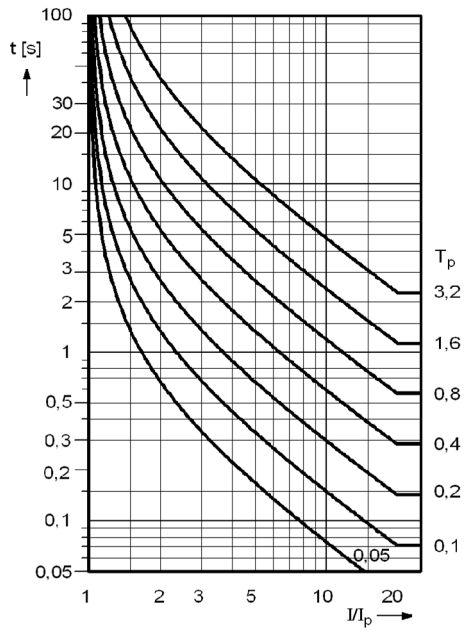

Very inverse:
(Type B)

$$t = \frac{13,5}{(I/I_p)^{1} - 1} \cdot T_p \quad [s]$$

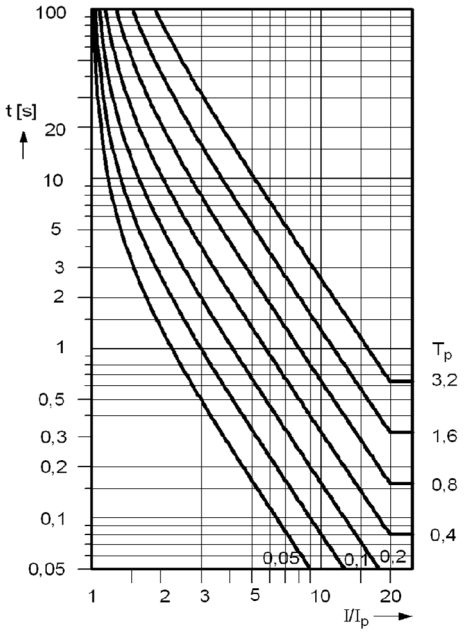

Extremely Inverse:
(Type C)

$$t = \frac{80}{(I/I_p)^{2} - 1} \cdot T_p \quad [s]$$

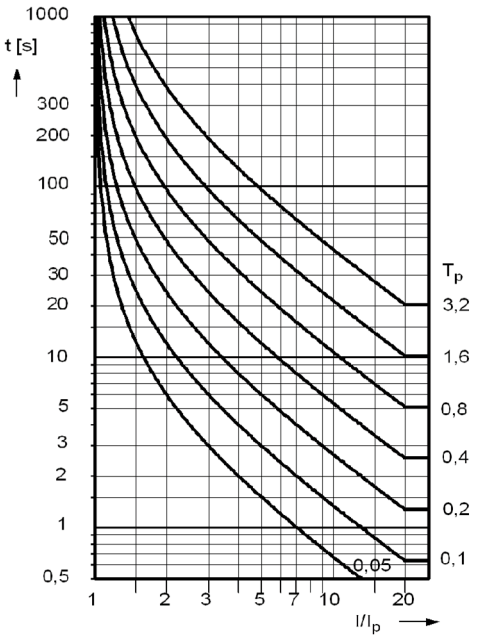

Long-time Inverse:

$$t = \frac{120}{(I/I_p)^{1} - 1} \cdot T_p \quad [s]$$

t Trip Time
T_p Setting Value of the time multiplier
I Fault current
I_p Setting value current

Note:
For earth fault read 3I0p instead of Ip
and T3I0p instead of Tp.

Figure 4-1 Trip time characteristics of inverse time overcurrent stage, acc. IEC (phases and earth)

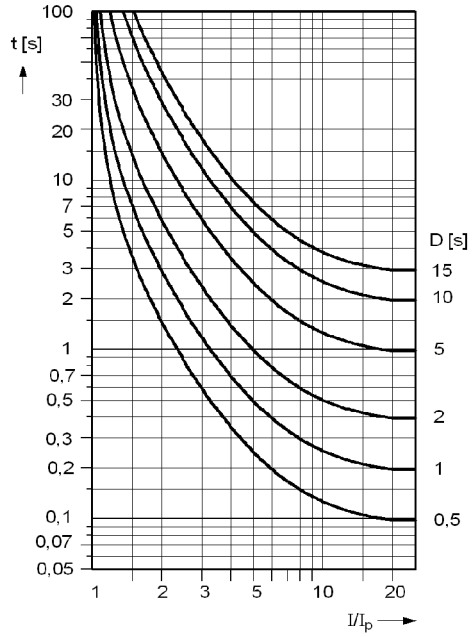

INVERSE $t = \left(\frac{8,9341}{(I/I_p)^{2,0938} - 1} + 0,17966 \right) \cdot D \ [s]$

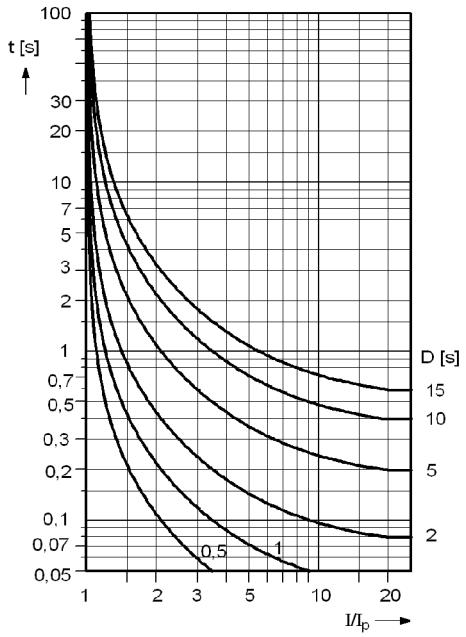

SHORT INVERSE $t = \left(\frac{0,2663}{(I/I_p)^{1,2969} - 1} - 0,03393 \right) \cdot D \ [s]$

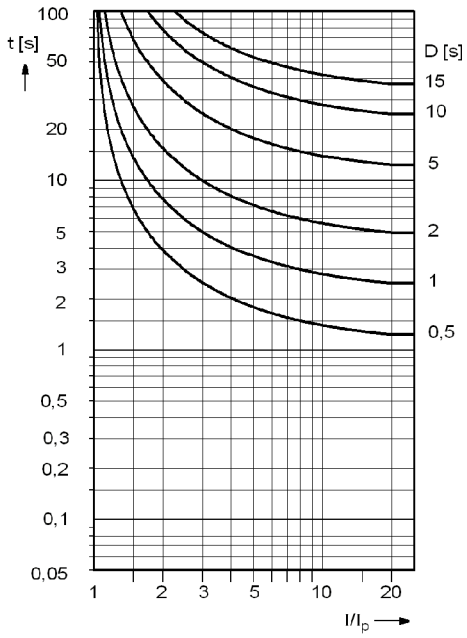

LONG INVERSE $t = \left(\frac{5,6143}{(I/I_p) - 1} + 2,18592 \right) \cdot D \ [s]$

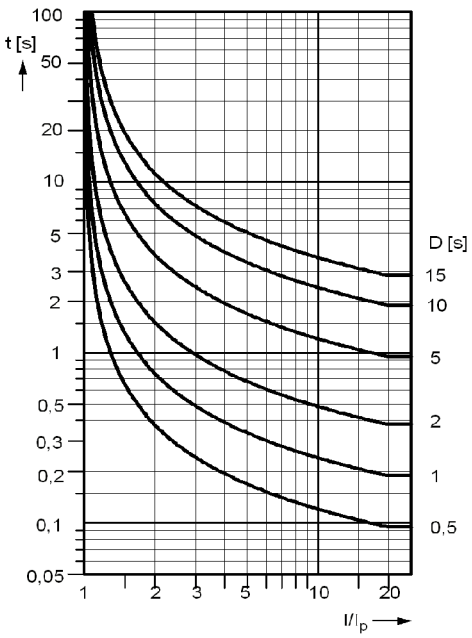

MODERATELY INVERSE $t = \left(\frac{0,0103}{(I/I_p)^{0,02} - 1} + 0,0228 \right) \cdot D \ [s]$

Figure 4-2 Trip time characteristics of inverse time overcurrent stage, acc. ANSI/IEEE (phases and earth)

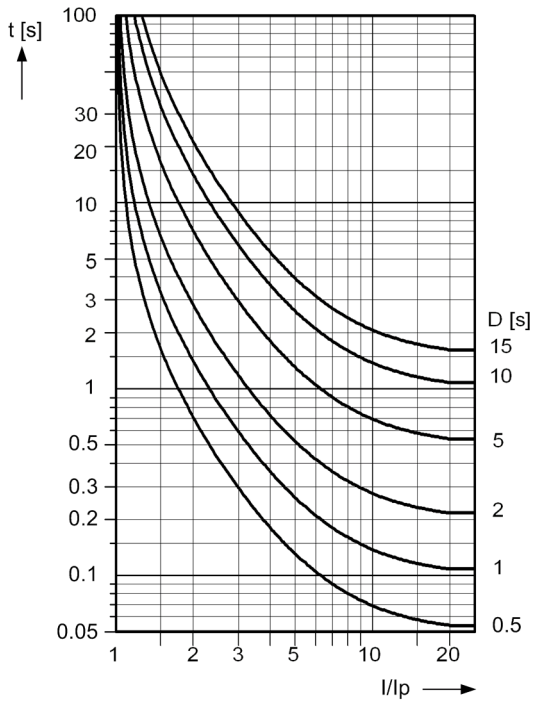

VERY INVERSE: $t = \left(\frac{3{,}922}{(I/I_p)^2 - 1} + 0{,}0982 \right) \cdot D[s]$

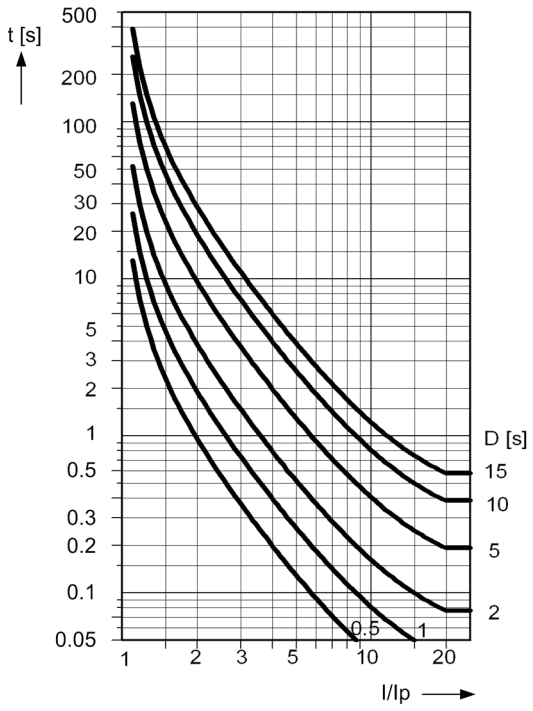

EXTREMELY INVERSE: $t = \left(\frac{5{,}64}{(I/I_p)^2 - 1} + 0{,}02434 \right) \cdot D[s]$

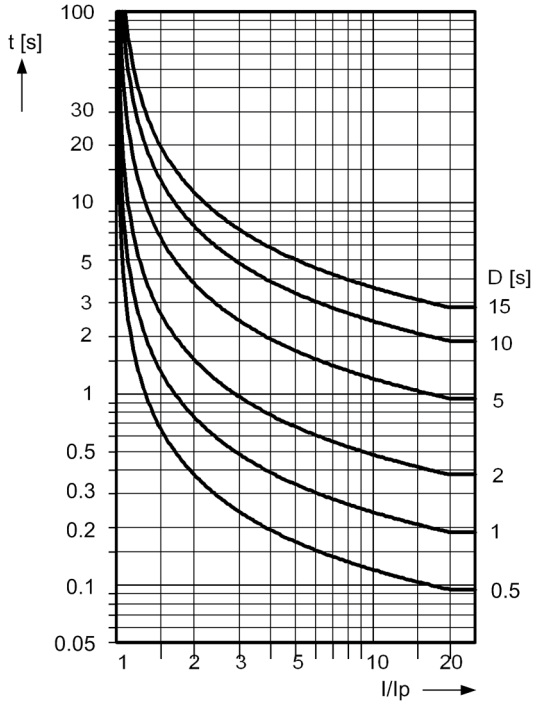

DEFINITE INVERSE: $t = \left(\frac{0{,}4797}{(I/I_p)^{1{,}5625} - 1} + 0{,}21359 \right) \cdot D[s]$

t Trip Time
D Setting value time multiplier
I Fault current
Ip Setting value current

Note:
For earth fault read 3I0p instead of Ip and D3I0p instead of D.

Figure 4-3 Trip time characteristics of inverse time overcurrent stage, acc. ANSI/IEEE (phases and earth)

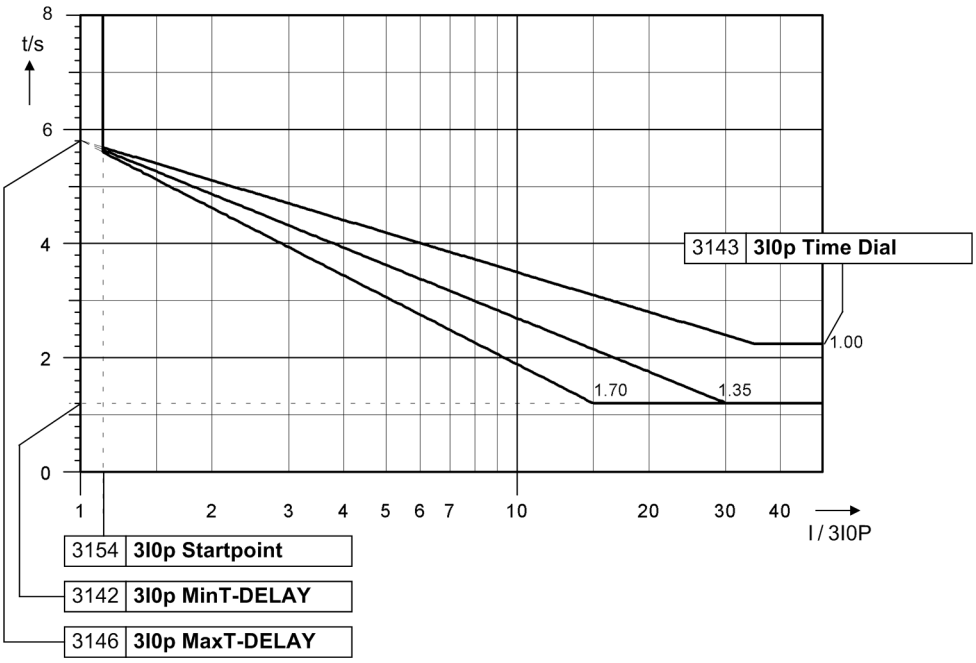

Figure 4-4 Trip time characteristic of the inverse time overcurrent stage with logarithmic-inverse characteristic

Logarithmic inverse $t = T_{3I0Pmax} - T_{3I0P} \cdot \ln(I/\mathbf{3I0P})$

Note: For $I/\mathbf{3I0P} > 35$, the time for $I/\mathbf{3I0P} = 35$ applies

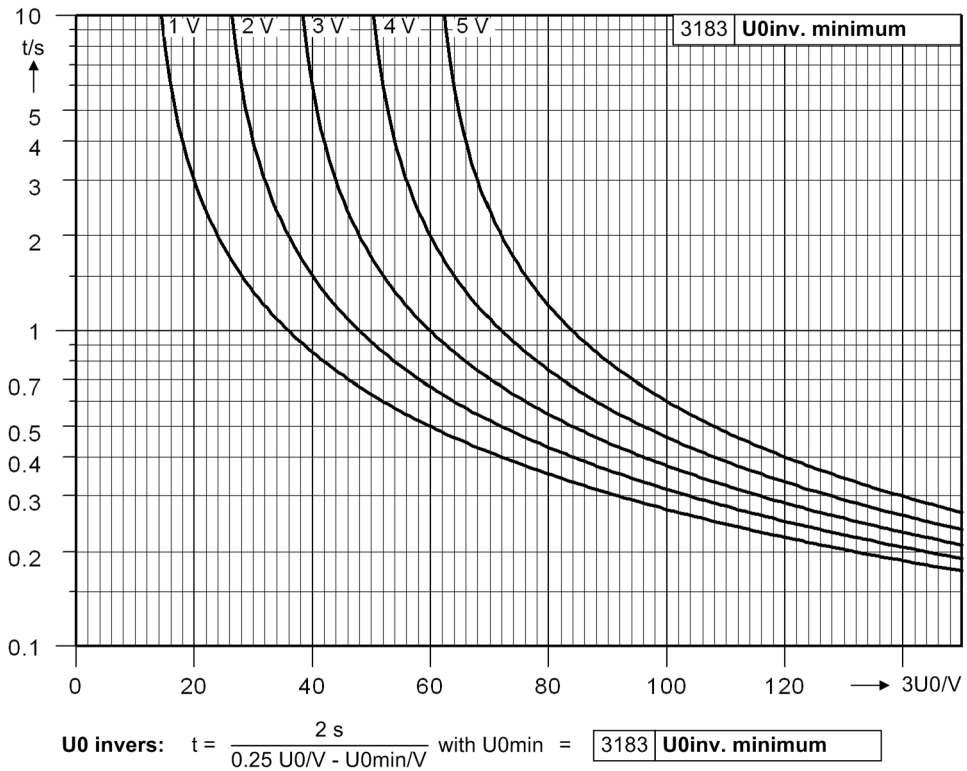

Figure 4-5 Trip time characteristics of the zero sequence voltage protection $U_{0\ inverse}$

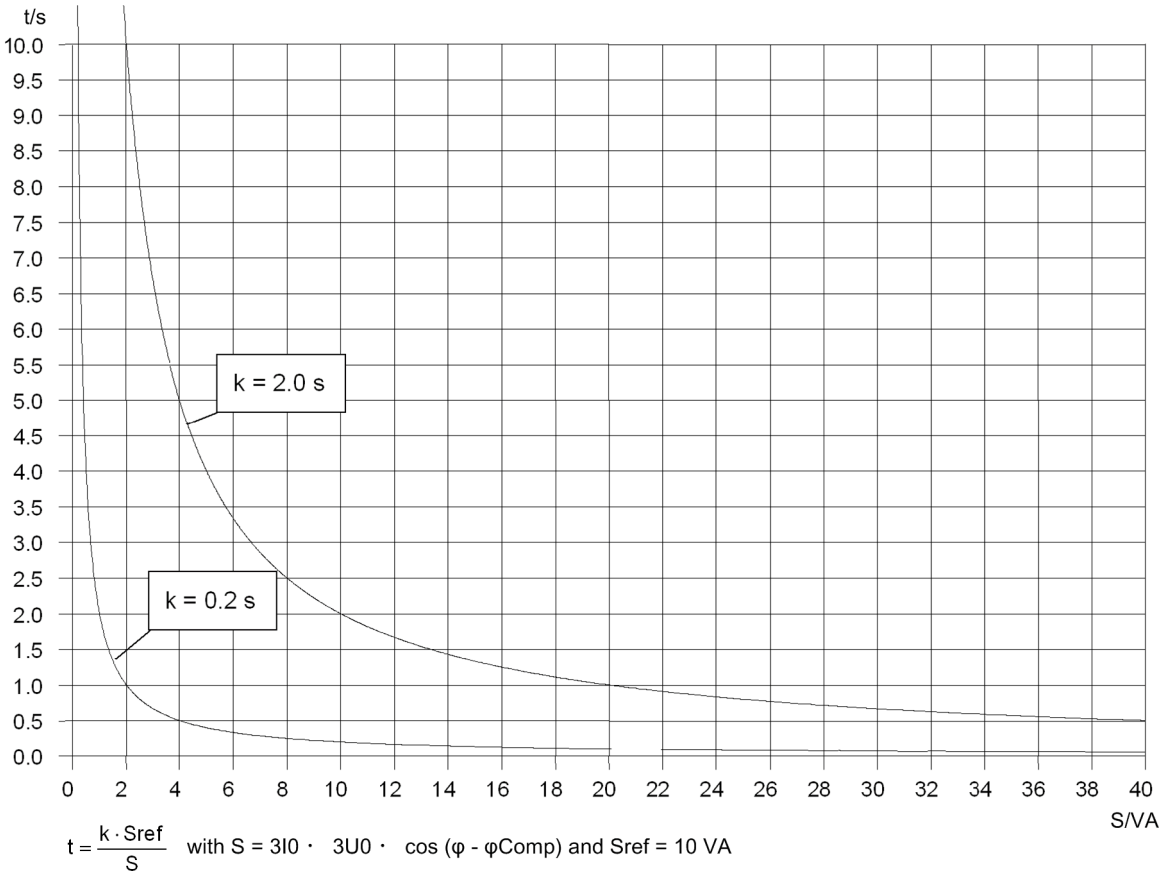

Figure 4-6 Tripping characteristics of the zero-sequence power protection

This characteristic applies for: S_{ref} = 10 VA and $T_{3IOPAdd.T\_DELAY}$ = 0 s.

4.6 Earth Fault Protection Teleprotection Schemes (optional)

Operating Mode

For two line ends	One channel for each direction or three channels each direction for phase-segregated transmission
For three line ends	With one channel for each direction or connection

Overreach schemes

Method	Dir. comp. pickup	
	Directional unblocking scheme	
	Directional blocking scheme	
Send signal prolongation	0.00 s to 30.00 s	Increments 0.01 s
Enable delay	0.000 s to 30.000 s	Increments 0.001 s
Transient blocking time	0.00 s to 30.00 s	Increments 0.01 s
Wait time for transient blocking	0.00 s to 30.00 s; ∞	Increments 0.01 s
Time expiry tolerances	1 % of setting value or 10 ms	
The set times are pure delay times		

Overreach Schemes via Protection Data Interface (optional)

Phase-segregated for two or three line ends		
Method	Dir. comp. pickup	
Send signal prolongation	0.00 s to 30.00 s	Increments 0.01 s
Enable delay	0.000 s to 30.000 s	Increments 0.001 s
Transient blocking time	0.00 s to 30.00 s	Increments 0.01 s
Wait time for transient blocking	0.00 s to 30.00 s; ∞	Increments 0.01 s
Echo delay time	0.00 s to 30.00 s	Increments 0.01 s
Echo impulse duration	0.00 s to 30.00 s	Increments 0.01 s
Time expiry tolerances	1 % of setting value or 10 ms	
The set times are pure delay times		

4.7 Weak-infeed Tripping (classical)

Operating Mode

Phase segregated undervoltage detection after reception of a carrier signal from the remote end

Undervoltage

Setting value $U_{PhE}<$	2 V to 70 V	Increments 1 V
Dropout to pickup ratio	Approx. 1.1	
Pickup tolerance	≤ 5 % of setting value, or 0.5 V	

Times

Echo delay/release delay	0.00 s to 30.00 s	Increments 0.01 s
Echo impulse duration/release prolongation	0.00 s to 30.00 s	Increments 0.01 s
Echo blocking duration after echo	0.00 s to 30.00 s	Increments 0.01 s
Pickup tolerance	1 % of setting value or 10 ms	

4.8 Weak-infeed Tripping (French Specification)

Operating Mode

Phase segregated undervoltage detection after reception of a carrier signal from the remote end

Undervoltage

Setting value $U_{PhE}<$	0.10 to 1.00	Increments 0.01
Dropout/pickup ratio	Approx. 1.1	
Pickup tolerance	≤ 5 %	

Times

Receive prolongation	0.00 s to 30.00 s	Increments 0.01 s
Extension time 3I0>	0.00 s to 30.00 s	Increments 0.01 s
Alarm time 3I0>	0.00 s to 30.00 s	Increments 0.01 s
Delay (single-pole)	0.00 s to 30.00 s	Increments 0.01 s
Delay (multi-pole)	0.00 s to 30.00 s	Increments 0.01 s
Time constant τ	1 s to 60 s	Increments 1 s
Pickup tolerance	1 % of setting value or 10 ms	

4.9 Protection Data Interface and Communication Topology (optional)

Protection Data Interfaces

Quantity	1 or 2
- Connection optical fibre	Mounting location „D“ for one connection or „D“ and „E“ for two connections
For flush-mounted case	On the rear side
For surface-mounted housing	At the inclined housing at the case bottom
Connection modules for protection data interface, depending on the ordering version:	

FO5 **FO30 (IEEE C37.94)**			
Distance, maximum	1.5 km or 0.9 miles		
Connector Type	ST connector		
Optical wavelength	λ = 820 nm		
Fibre Type	Multimode 62.5 μm/125 μm		
Transmit output (peak)	Min.	Type	max.
50 μm /125 μm, NA = 0.2[1)] 62.5 μm /125 μm, NA = 0.275[1)]	-19.8 dBm -16.0 dBm	-15.8 dBm -12.0 dBm	-12.8 dBm -9.0 dBm
Receiver sensitivity (peak) – Optical power for high level – Optical power for low level	 Max. -40 dBm Min. -24 dBm		
Optical budget	min. 4.2 dB for 50 μm /125 μm, NA = 0.2[1)] min. 8 dB for 62.5 μm /125 μm, NA = 0.275[1)]		
Laser class 1 according to EN 60825-1/-2	Using glass fibre 62.5 μm /125 μm and 50 μm /125 μm		
Reach	for multimode optical fibre, an optical signal attenuation of 3 dB/km is used for calculating light with a wavelength of λ = 820 nm		
Attenuators required	no		

[1)] Numeric opening (NA = sin ϕ (coupling angle)

FO6		
Distance, maximum	3.5 km or 2.2 miles	
Connector Type	ST connector	
Optical wavelength	λ = 820 nm	
Fibre Type	Multimode 62.5 μm/125 μm	
Transmit output (avg)	Min.	Type
50 μm /125 μm, NA = 0.2[1)] 62.5 μm /125 μm, NA = 0.275[1)]	-18.0 dBm -17.0 dBm	-15.0 dBm -12.0 dBm
Receiver sensitivity (avg)	min. -33 dBm_{avg}	
Optical budget	min. 15.0 dB for 50 μm /125 μm, NA = 0.2[1)] min. 16.0 B for 62,5 μm /125 μm, NA = 0.275[1)]	
Laser class 1 according to EN 60825-1/-2	Using glass fibre 62.5 μm /125 μm and 50 μm /125 μm	

Reach	for multimode optical fibre, an optical signal attenuation of 3 dB/km is used for calculating light with a wavelength of λ = 820 nm
Attenuators required	no

1) Numeric opening (NA = sin ϕ (coupling angle)
2) This FO type can be used alternatively to the types described in the manual.

FO17	
Distance, maximum	24 km or 14,9 miles
Connector Type	LC duplex connector, SFF (IEC 61754–20 Standard)
Protocol	full-duplex
Baudrate	155 MBits/s
Receiver interfacing	AC
Optical wavelength	λ = 1300 nm
Fibre Type	Monomode 9 µm/125 µm
Transmit output coupled in Monomodefaster	min. -15.0 dBm_{avg} max. -8.0 dBm_{avg}
Receiver sensitivity	min. -28.0 dBm_{avg} max. -31.0 dBm_{avg}
Optical budget	13.0 dB
Laser Class 1 according to EN 60825–1/-2	Using glass fibre 9 µm/125 µm
Reach	for multimode optical fibre, an optical signal attenuation of 0.3 dB/km is used for calculating light with a wavelength of λ = 1300 nm
Attenuators required	no

FO18	
Distance, maximum	60 km or 37,3 miles
Connector Type	LC duplex connector, SFF (IEC 61754–20 Standard)
Protocol	full-duplex
Baudrate	155 MBits/s
Receiver interfacing	AC
Optical wavelength	λ = 1300 nm
Fibre Type	Monomode 9 µm/125 µm
Transmit output coupled in Monomodefaster	min. -5.0 dBm_{avg} max. -0 dBm_{avg}
Receiver sensitivity	min. -34.0 dBm_{avg} max. -34.5 dBm_{avg}
Optical budget	29.0 dB
Laser Class 1 according to EN 60825–1/-2	Using glass fibre 9 µm/125 µm
Reach	for multimode optical fibre, an optical signal attenuation of 0.3 dB/km is used for calculating light with a wavelength of λ = 1300 nm
Attenuators required	for distances of less than 25 km (15.5 miles)[1)]

1) If protection data interface communication is used for distances of less than 25 km or 15.5 miles , the transmit output has to be reduced by a set of optical attenuators. Both attenuators can be installed on one side.

FO19	
Distance, maximum	100 km
Connector Type	LC duplex connector, SFF (IEC 61754–20 Standard)
Protocol	full-duplex
Baudrate	155 MBits/s
Receiver interfacing	AC
Optical wavelength	λ = 1550 nm
Fibre Type	Monomode 9 µm/125 µm
Transmit output coupled in Monomodefaster	min. -5.0 dBm_{avg} max. -0 dBm_{avg}
Receiver sensitivity	min. -34.0 dBm_{avg} max. -34.5 dBm_{avg}
Optical budget	29.0 dB
Laser Class 1 according to EN 60825–1/-2	Using glass fibre 9 µm/125 µm
Reach	for multimode optical fibre, an optical signal attenuation of 0.2 dB/km is used for calculating light with a wavelength of λ = 1550 nm
Attenuators required	for distances of less than 50 km (31.1 miles)[1)]

[1)] If protection data interface communication is used for distances of less than 50 km or 31.1 miles, the transmit output has to be reduced by a set of optical attenuators. Both attenuators can be installed on one side.

- Character idle state	„Light off“

Protection Data Communication

Direct connection:		
Transmission rate	512 kbit/s	
Fibre type	refer to table above	
Optical wavelength		
Permissible link signal attenuation		
Transmission distance		
Connection via communication networks:		
Communication converter	See Appendix A.1, Subsection Accessories	
Supported network interfaces	G703.1 with 64 kbit/s	
	X.21 with 64 kBit/s or 128 kBit/s or 512 kBit/s	
	S0 (ISDN) with 64 kbit/s	
	Pilot wires with 128 Kbits/s;	
Connection to communication converter	See table above under module FO5	
Transmission rate	64 kbit/s with G703.1	
	512 kbit/s or 128 kBit/s or 64 kbit/s with X.21	
	64 kBit/s with S0 (ISDN)	
	128 kBit/s with pilot wires	
Max. runtime time	0.1 ms to 30 ms	Increments 0.1 ms
Max. runtime difference	0.000 ms to 3.000 ms	Increments 0.001 ms
Transmission accuracy	CRC 32 according to CCITT or ITU	

4.10 External Direct and Remote Tripping

External Trip of the Local Breaker

Operating time, total	Approx. 11 ms	
Trip time delay	0.00 s to 30.00 s or ∞ (ineffective)	Increments 0.01 s
Time expiry tolerances	1 % of setting value or 10 ms	
The set times are pure delay times		

4.11 Time Overcurrent Protection

Operating modes

As emergency overcurrent protection or back-up overcurrent protection	
Emergency overcurrent protection	Operates on failure of the measured voltage, • On trip of a voltage transformer mcb (via binary input) • For pickup of the „Fuse Failure Monitor“
Back-up overcurrent protection	Operates independent of any events

Characteristics

Definite dime stages (definite)	I_{Ph}>>>, $3I_0$>>>, I_{Ph}>>, $3I_0$>>, I_{Ph}>, $3I_0$>
Inverse time stages (IDMT)	I_P, $3I_{0P}$; one of the characteristics according to Figure 4-1 to 4-3 (see Technical Data Section „Earth Fault Protection“) can be selected

High-set Current Stages

Pickup value I_{Ph}>> (phases)	for I_N = 1 A	0.10 A to 25.00 A or ∞ (ineffective)	Increments 0.01 A
	for I_N = 5 A	0.50 A to 125.00 A or ∞ (ineffective)	
Pickup value $3I_0$>> (earth)	for I_N = 1 A	0.05 A to 25.00 A or ∞ (ineffective)	Increments 0.01 A
	for I_N = 5 A	0.25 A to 125.00 A or ∞ (ineffective)	
Pickup value $_{IPh}$>> (phases)		0.00 s to 30.00 s or ∞ (ineffective)	Increments 0.01 s
Delay T_{3I0}>> (earth)		0.00 s to 30.00 s or ∞ (ineffective)	Increments 0.01 s
Dropout ratio		Approx. 0.95 for $I/I_N \geq 0.5$	
Pickup times (fast relays/high-speed relays)		Approx. 25 ms/20 ms	
Dropout times		Approx. 30 ms	
Tolerances	Currents	3 % of setting value or 1 % nominal current	
	Times	1 % of setting value or 10 ms	
The set times are pure delay times			

Overcurrent Stages

Pickup value $I_{Ph}>$ (phases)	for I_N = 1 A	0.10 A to 25.00 A or ∞ (ineffective)	Increments 0.01 A
	for I_N = 5 A	0.50 A to 125.00 A or ∞ (ineffective)	
Pickup value $3I_0>$ (earth)	for I_N = 1 A	0.05 A to 25.00 A or ∞ (ineffective)	Increments 0.01 A
	for I_N = 5 A	0.25 A to 125.00 A or ∞ (ineffective)	
Delay $T_{IPh}>$ (phases)		0.00 s to 30.00 s or ∞ (ineffective)	Increments 0.01 s
Delay $T_{3I0}>$ (earth)		0.00 s to 30.00 s or ∞ (ineffective)	Increments 0.01 s
Dropout ratio		Approx. 0.95 for $I/I_N \geq 0.5$	
Pickup times (fast relays/high-speed relays)		Approx. 25 ms/20 ms	
Dropout times		Approx. 30 ms	
Tolerances	Currents	3 % of setting value or 1 % nominal current	
	Times	1 % of setting value or 10 ms	
The set times are pure delay times			

Inverse Time Stages (IEC)

Pickup value I_P (phases)	for I_N = 1 A	0.10 A to 4.00 A or ∞ (ineffective)	Increments 0.01 A
	for I_N = 5 A	0.50 A to 20.00 A or ∞ (ineffective)	
Pickup value $3I_{0P}$ (earth)	for I_N = 1 A	0.05 A to 4.00 A or ∞ (ineffective)	Increments 0.01 A
	for I_N = 5 A	0.25 A to 20.00 A or ∞ (ineffective)	
Time multipliers	T_{IP} (phases)	0.05 s to 3.00 s or ∞ (ineffective)	Increments 0.01 s
	T_{3I0P} (earth)	0.05 s to 3.00 s or ∞ (ineffective)	Increments 0.01 s
Additional time delays	$T_{IP\ delayed}$ (phases)	0.00 s to 30.00 s	Increments 0.01 s
	$T_{3I0P\ delayed}$ (earth)	0.00 s to 30.00 s	Increments 0.01 s
Characteristics		See Figure 4-1	
Tolerances			
Pickup/dropout thresholds I_p, $3I_{0p}$		3 % of set value, or 1 % nominal current	
Pickup time for $2 \leq I/3I_{0P} \leq 20$ and $T_{IP} \geq 1$ s Pickup time for $2 \leq I/3I_{0P} \leq 20$ and $T_{3I0P} \geq 1$ s		5 % of set value ± 15 ms 5 % of set value ± 15 ms	
Defined times		1 % of setting value or 10 ms	

Inverse Time Stages (ANSI)

Pickup value I_P (phases)	for I_N = 1 A	0.10 A to 4.00 A or ∞ (ineffective)	Increments 0.01 A
	for I_N = 5 A	0.50 A to 20.00 A or ∞ (ineffective)	
Pickup value $3I_{0P}$ (earth)	for I_N = 1 A	0.05 A to 4.00 A or ∞ (ineffective)	Increments 0.01 A
	for I_N = 5 A	0.25 A to 20.00 A or ∞ (ineffective)	
Time multipliers	D_{IP} (phases)	0.50 s to 15.00 s or ∞ (ineffective)	Increments 0.01 s
	D_{3I0P} (earth)	0.50 s to 15.00 s or ∞ (ineffective)	Increments 0.01 s
Additional time delays	$T_{IP\ delayed}$ (phases)	0.00 s to 30.00 s	Increments 0.01 s
	$T_{3I0P\ delayed}$ (earth)	0.00 s to 30.00 s	Increments 0.01 s
Characteristics		See Figure 4-2 and 4-3	
Tolerances			
Pickup/dropout thresholds I_p, $3I_{0p}$		3 % of set value, or 1 % nominal current	
Pickup time for $2 \le I/I_P \le 20$ and $D_{IP} \ge 1$ s Pickup time for $2 \le I/3I_{0P} \le 20$ and $D_{3I0P} \ge 1$ s		5 % of set value ± 15 ms 5 % of set value ± 15 ms	
Defined times		1 % of setting value or 10 ms	

Stub Fault Protection

Pickup value I_{Ph}>>>(phases)	for I_N = 1 A	0.10 A to 25.00 A or ∞ (ineffective)	Increments 0.01 A
	for I_N = 5 A	0.50 A to 125.00 A or ∞ (ineffective)	
Pickup value $3I_0$>>> (earth)	for I_N = 1 A	0.05 A to 25.00 A or ∞ (ineffective)	Increments 0.01 A
	for I_N = 5 A	0.25 A to 125.00 A or ∞ (ineffective)	
Delays	T_{IPh}>>>	0.00 s to 30.00 s or ∞ (ineffective)	Increments 0.01 s
	T_{3I0}>>>	0.00 s to 30.00 s or ∞ (ineffective)	Increments 0.01 s
Dropout to pickup ratio		Approx. 0.95 for $I/I_N \ge 0.5$	
Pickup times (fast relays/high-speed relays)		Approx. 25 ms/20 ms	
Dropout times		Approx. 30 ms	
Tolerance currents	Currents	3 % of setting value or 1 % nominal current	
	Times	1 % of setting value or 10 ms	
The set times are pure delay times.			

4.12 Instantaneous High-current Switch-onto-fault Protection

Pickup

Pickup value I>>>	for I_N = 1 A	1.00 A to 25.00 A	Increments 0.01 A
	for I_N = 5 A	5.00 A to 125.00 A	
Drop-off to pick-up ratio		Approx. 90 %	
Pick-up tolerance		3 % of setting value or 1 % of I_N	

Times

Shortest trip time	Approx. 13 ms for fast relays Approx. 8 ms for high-speed relays

4.13 Automatic Reclosure (optional)

Automatic Reclosures

Number of reclosures	Max. 8, first 4 with individual settings	
Type (depending on ordered version)	1-pole, 3-pole or 1-/3-pole	
Control	With pickup or trip command	
Action times Initiation possible without pickup and action time	0.01 s to 300.00 s; ∞	Increments 0.01 s
Different dead times before reclosure can be set for all operating modes and cycles	0.01 s to 1800.00 s; ∞	Increments 0.01 s
Dead times after evolving fault recognition	0.01 s to 1800.00 s	Increments 0.01 s
Reclaim time after reclosure	0.50 s to 300.00 s	Increments 0.01 s
Blocking time after dynamic blocking	0.5 s	
Blocking time after manual closing	0.50 s to 300.00 s; 0	Increments 0.01 s
Start signal monitoring time	0.01 s to 300.00 s	Increments 0.01 s
Circuit breaker monitoring time	0.01 s to 300.00 s	Increments 0.01 s

Adaptive Dead Time/Reduced Dead Time/Dead Line Check

Adaptive dead time	With voltage measurement or with close command transmission	
Action times Initiation possible without pickup and action time	0.01 s to 300.00 s; ∞	Increments 0.01 s
Maximum dead time	0.50 s to 3000.00 s	Increments 0.01 s
Voltage measurement dead line or bus	2 V to 70 V (Ph-E)	Increments 1 V
Voltage measurement live or bus	30 V to 90 V (Ph-E)	Increments 1 V
Voltage measuring time	0.10 s to 30.00 s	Increments 0.01 s
Time delay for close command transmission	0.00 s to 300.00 s; ∞	Increments 0.01 s

4.14 Synchronism and Voltage Check (optional)

Operating modes

Operating modes with automatic reclosure	Synchronism check
	Live bus - dead line
	Dead bus - live line
	Dead bus and dead line
	Bypassing
	Or combination of the above
Synchronism	Closing the circuit breaker under asynchronous power conditions possible (with circuit breaker action time)
Operating modes for manual closure	As for automatic reclosure, independently selectable

Voltages

Maximum operating voltage	20 V to 140 V (phase-to-phase)	Increments 1 V
U< for dead status	1 V to 60 V (phase-to-phase)	Increments 1 V
U> for live status	20 V to 125 V (phase-to-phase)	Increments 1 V
Tolerances	2 % of pickup value or 1 V	
Dropout to pickup ratio	Approx. 0.9 (U>) or 1.1 (U<)	

ΔU Measurement

Voltage difference	1.0 V to 60.0 V (phase-to-phase)	Increments 0.1V
Tolerance	1 V	
Dropout to pickup ratio	Approx. 1.05	

Synchronous power conditions

$\Delta\varphi$-measurement	2° to 80°	Increments 1°
Tolerance	2°	
Δf-measurement	0.03 Hz to 2.00 Hz	Increments 0.01 Hz
Tolerance	15 mHz	
Enable delay	0.00 s to 30.00 s	Increments 0.01 s

Asynchronous power conditions

Δf-measurement	0.03 Hz to 2.00 Hz	Increments 0.01 Hz
Tolerance	15 mHz	
Max. angle error	5° for $\Delta f \leq 1$ Hz	
	10° for $\Delta f > 1$ Hz	
Synchronous/asynchronous limits	0.01 Hz	
Circuit breaker operating time	0.01 s to 0.60 s	Increments 0.01 s

Times

Minimum time for filtering the measured values	Approx. 80 ms	
Maximum measuring time	0.01 s to 600.00 s; ∞	Increments 0.01 s
Tolerance of all timers	1 % of setting value or 10 ms	

4.15 Voltage Protection (optional)

Phase-earth overvoltages

Overvoltage U_{Ph}>>		1.0 V to 170.0 V; ∞	Increments 0.1 V
Delay $T_{UPh>>}$		0.00 s to 100.00 s; ∞	Increments 0.01 s
Overvoltage U_{Ph}>		1.0 V to 170.0 V; ∞	Increments 0.1 V
Delay $T_{UPh>}$		0.00 s to 100.00 s; ∞	Increments 0.01 s
Dropout to pickup ratio		0.30 to 0.99	Increments 0.01
Pickup time		Approx. 35 ms (50 Hz) / approx. 30 ms (60 Hz)	
Dropout time		Approx. 30 ms	
Tolerances	Voltages	3 % of setting value or 1 V	
	Times	1 % of setting value or 10 ms	

Phase-phase overvoltages

Overvoltage U_{PhPh}>>		2.0 V to 220.0 V; ∞	Increments 0.1 V
Delay $T_{UPhPh>>}$		0.00 s to 100.00 s; ∞	Increments 0.01 s
Overvoltage U_{PhPh}>		2.0 V to 220.0 V; ∞	Increments 0.1 V
Delay $T_{UPhPh>}$		0.00 s to 100.00 s; ∞	Increments 0.01 s
Dropout to pickup ratio		0.30 to 0.99	Increments 0.01
Pickup time		Approx. 35 ms (50 Hz) / approx. 30 ms (60 Hz)	
Dropout time		30 ms	
Tolerances	Voltages	3 % of setting value or 1 V	
	Times	1 % of setting value or 10 ms	

Overvoltage Positive Sequence SystemU_1

Overvoltage U_1>>		2.0 V to 220.0 V; ∞	Increments 0.1 V
Delay $T_{U1>>}$		0.00 s to 100.00 s; ∞	Increments 0.01 s
Overvoltage U_1>		2.0 V to 220.0 V; ∞	Increments 0.1 V
Delay $T_{U1>}$		0.00 s to 100.00 s; ∞	Increments 0.01 s
Dropout to pickup ratio		0.30 to 0.99	Increments 0.01
Compounding		Can be switched on/off	
Pickup time		Approx. 35 ms (50 Hz) / approx. 30 ms (60 Hz)	
Dropout time		Approx. 30 ms	
Tolerances	Voltages	3 % of setting value or 1 V	
	Times	1 % of setting value or 10 ms	

Overvoltage negative sequence system U_2

Overvoltage U_2>>		2.0 V to 220.0 V; ∞	Increments 0.1 V
Delay $T_{U2>>}$		0.00 s to 100.00 s; ∞	Increments 0.01 s
Overvoltage U_2>		2.0 V to 220.0 V; ∞	Increments 0.1 V
Delay $T_{U2>}$		0.00 s to 100.00 s; ∞	Increments 0.01 s
Dropout to pickup ratio		0.30 to 0.99	Increments 0.01
Pickup time		Approx. 35 ms (50 Hz) / approx. 30 ms (60 Hz)	
Dropout time		Approx. 30 ms	
Tolerances	Voltages	3 % of setting value or 1 V	
	Times	1 % of setting value or 10 ms	

Overvoltage zero sequence system $3U_0$ or any single-phase voltage U_X

Overvoltage $3U_0$>>		1.0 V to 220.0 V; ∞	Increments 0.1 V
Delay $T_{3U0>>}$		0.00 s to 100.00 s; ∞	Increments 0.01 s
Overvoltage $3U_0$>		1.0 V to 220.0 V; ∞	Increments 0.1 V
Delay $T_{3U0>}$		0.00 s to 100.00 s; ∞	Increments 0.01 s
Dropout to pickup ratio		0.30 to 0.99	Increments 0.01
Pickup time			
With repeated measurement		Approx. 75 ms (50 Hz) / approx. 65 ms (60 Hz)	
Without repeated measurement		Approx. 35 ms (50 Hz) / approx. 30 ms (60 Hz)	
Dropout time			
With repeated measurement		Approx. 75 ms (50 Hz)	
Without repeated measurement		Approx. 30 ms (50 Hz)	
Tolerances	Voltages	3 % of setting value or 1 V	
	Times	1 % of setting value or 10 ms	

Phase-earth Undervoltage

Undervoltage U_{Ph}<<		1.0 V to 100.0 V	Increments 0.1 V
Delay $T_{UPh<<}$		0.00 s to 100.00 s; ∞	Increments 0.01 s
Undervoltage U_{Ph}<		1.0 V to 100.0 V	Increments 0.1 V
Delay $T_{UPh<}$		0.00 s to 100.00 s; ∞	Increments 0.01 s
Dropout to pickup ratio		1.01 to 1.20	Increments 0.01
Current criterion		Can be switched on/off	
Pickup time		Approx. 35 ms (50 Hz)/approx. 30 ms (60 Hz)	
Dropout time		Approx. 30 ms	
Tolerances	Voltages	3 % of set value or 1 V	
	Times	1 % of set value or 10 ms	

Phase-phase undervoltages

Undervoltage U_{PhPh}<<		1.0 V to 175.0 V	Increments 0.1V
Delay $T_{UPhPh<<}$		0.00 s to 100.00 s; ∞	Steps 0.01 s
Undervoltage U_{PhPh}<		1.0 V to 175.0 V	Increments 0.1V
Delay $T_{UPhPh<}$		0.00 s to 100.00 s; ∞	Steps 0.01 s
Dropout to pickup ratio		1.01 to 1.20	Steps 0.01
Current criterion		Can be switched on/off	
Pickup time		Approx. 35 ms (50 Hz) / approx. 30 ms (60 Hz)	
Dropout time		Approx. 30 ms	
Tolerances	Voltages	3 % of setting value or 1 V	
	Times	1 % of set value or 10 ms	

Undervoltage Positive Sequence System U_1

Undervoltage U_1<<		1.0 V to 100.0 V	Increments 0.1 V
Delay $T_{U1<<}$		0.00 s to 100.00 s; ∞	Increments 0.01 s
Undervoltage U_1<		1.0 V to 100.0 V	Increments 0.1 V
Delay $T_{U1<}$		0.00 s to 100.00 s; ∞	Increments 0.01 s
Dropout to pickup ratio		1.01 to 1.20	Increments 0.01
Current criterion		Can be switched on/off	
Pickup time		Approx. 35 ms (50 Hz)/approx. 30 ms (60 Hz)	
Dropout time		Approx. 30 ms	
Tolerances	Voltages	3 % of set value or 1 V	
	Times	1 % of set value or 10 ms	

4.16 Frequency Protection (optional)

Frequency Elements

Quantity	4, depending on setting effective on f< or f>

Pick-up Values

f> or f< adjustable for each element		
For f_N = 50 Hz	45.50 Hz to 54.50 Hz	Increments 0.01 Hz
For f_N = 60 Hz	55.50 Hz to 64.50 Hz	Increments 0.01 Hz

Times

Pickup times f>, f<	Approx. 85 ms	
Dropout times f>, f<	Approx. 30 ms	
Delay times T	0.00 s to 600.00 s	Increments 0.01 s
The set times are pure delay times. Note on dropout times: Dropout was enforced by current = 0 A and voltage = 0 V. Enforcing the dropout by means of a frequency change below the dropout threshold extends the dropout times.		

Dropout Frequency

Δf = | pickup value – dropout value |	Approx. 20 mHz

Operating Range

In voltage range	Approx. 0.65 · U_N up to 230 V (phase-phase)
In frequency range	25 Hz to 70 Hz

Tolerances

Frequencies f>, f< in specific range (f_N ± 10 %)	15 mHz in range U_{LL}: 50 V to 230 V
Time delays T(f<, f>)	1 % of setting value or 10 ms

4.17 Fault Locator

Start		With trip command or drop-off	
Setting range reactance (secondary), miles or km	for I_N = 1 A	0.005 Ω/km to 9.500 Ω/km	Increments 0.001 Ω/km
	for I_N = 5 A	0.001 Ω/km to 1.900 Ω/km	
	for I_N = 1 A	0.005 Ω/mile to 15.000 Ω/mile	Increments 0.001 Ω/mile
	for I_N = 5 A	0.001 Ω/mile to 3.000 Ω/mile	
Parallel line compensation (selectable)		Can be switched on/off The setting values are the same as for distance protection (see Section 4.2)	
Taking into consideration the load current in case of single-phase earth faults		Correction of the X-value, can be activated and deactivated	
Output of the fault distance		In Ω primary and Ω secondary, in km or miles line length [1)] in % of the line length [1)]	
Measuring tolerances with sinusoidal quantities		2.5 % from the fault location at 30° ≤ φ_k ≤ 90° and U_k/U_N ≥ 0.1	
Further output options (depending on ordered version)		as BCD-code 4 Bit units + 4 Bit tens + 1 Bit hundreds + validity bit	
- BCD output time		0.01 s to 180.00 s; ∞	Increments 0.01 s

[1)] Output of the fault distance in km, miles, and % requires homogeneous lines

4.18 Circuit Breaker Failure Protection (optional)

Circuit breaker monitoring

Current flow monitoring	for I_N = 1 A	0.05 A to 20.00 A	Increments 0.01 A
	for I_N = 5 A	0.25 A to 100.00 A	
Zero sequence current monitoring	for I_N = 1 A	0.05 A to 20.00 A	Increments 0.01 A
	for I_N = 5 A	0.25 A to 100.00 A	
Dropout to pickup ratio		Approx. 0.95	
Tolerance		5 % of set value or 1 % of nominal current	
Monitoring of circuit breaker auxiliary contact position			
for 3-pole tripping		binary input for CB auxiliary contact	
for 1-pole tripping		1 binary input for auxiliary contact per pole or 1 binary input for series connection NO contact and NC contact	
Note: The circuit breaker failure protection can also operate without the indicated circuit breaker auxiliary contacts, but the function range is then reduced. Auxiliary contacts are necessary for the circuit breaker failure protection for tripping without or with a very low current flow (e.g. Buchholz protection) and for stub fault protection and circuit breaker pole discrepancy supervision.			

Initiation conditions

For circuit breaker failure protection	Internal or external 1-pole trip [1)] Internal or external 3-pole trip [1)] Internal or external 3-pole trip without current [1)]

[1)] Via binary inputs

Times

Pickup time	Approx. 5 ms with measured quantities present Approx. 20 ms after switch-on of measured quantities	
Dropout time, internal (overshoot time)	≤ 15 ms at sinusoidal measured values, ≤ 25 ms maximal	
Delay times for all stages	0.00 s to 30.00 s; ∞	Increments 0.01 s
Tolerance	1 % of setting value or 10 ms	

Stub Fault Protection

With signal transmission to the opposite line end		
Time delay	0.00 s to 30.00 s; ∞	Increments 0.01 s
Tolerance	1 % of setting value or 10 ms	

Pole Discrepancy Supervision

Initiation criterion	Not all poles are closed or open	
Monitoring time	0.00 s to 30.00 s; ∞	Increments 0.01 s
Tolerance	1 % of setting value or 10 ms	

4.19 Monitoring Functions

Measured values

Current sum		$I_F = \lvert \underline{I}_{L1} + \underline{I}_{L2} + \underline{I}_{L3} + k_I \cdot \underline{I}_E \rvert >$ SUM.I Threshold $\cdot I_N$ + SUM.FactorI $\cdot \Sigma \lvert I \rvert$	
- SUM.ILimit	for I_N = 1 A	0.10 A to 2.00 A	Increments 0.01 A
	for I_N = 5 A	0.50 A to 10.00 A	Increments 0.01 A
- SUM.FACTOR I		0.00 to 0.95	Increments 0.01
Voltage sum		$U_F = \lvert \underline{U}_{L1} + \underline{U}_{L2} + \underline{U}_{L3} + k_U \cdot \underline{U}_{EN} \rvert >$ 25 V	
Current Symmetry		$\lvert I_{min} \rvert / \lvert I_{max} \rvert <$ BAL.FACTOR.I as long as $I_{max}/I_N >$ BAL.ILIMIT/I_N	
- BAL.FACTOR.I		0.10 to 0.95	Increments 0.01
- BAL.ILIMIT	for I_N = 1 A	0.10 A to 1.00 A	Increments 0.01 A
	for I_N = 5 A	0.50 A to 5.00 A	Increments 0.01 A
- T BAL.ILIMIT		5 s to 100 s	Increments 1 s
Broken conductor		One conductor without current, the others with current (monitoring of current transformer circuits on current step change in one phase without residual current)	
Voltage Symmetry		$\lvert U_{min} \rvert / \lvert U_{max} \rvert <$ BAL.FACTOR.U as long as $\lvert U_{max} \rvert >$ BAL.ULIMIT	
- BAL.FACTOR.U		0.58 to 0.95	Increments 0.01
- BAL.ULIMIT		10 V to 100 V	Increments 1 V
- T BAL.ULIMIT		5 s to 100 s	Increments 1 s
Voltage phase sequence		$\underline{U}_{L1}$ before $\underline{U}_{L2}$ before $\underline{U}_{L3}$ as long as $\lvert \underline{U}_{L1} \rvert$, $\lvert \underline{U}_{L2} \rvert$, $\lvert \underline{U}_{L3} \rvert > 40\ V/\sqrt{3}$	
Non-symmetrical voltages (Fuse failure monitoring)		$3 \cdot U_0 >$ FFM U> or $3 \cdot U_2 >$ FFM U> and at the same time $3 \cdot I_0 <$ FFM I< and $3 \cdot I_2 <$ FFM I<	
- FFM U>		10 V to 100 V	Increments 1 V
- FFM I<	for I_N = 1 A	0.10 A to 1.00 A	Increments 0.01 A
	for I_N = 5 A	0.50 A to 5.00 A	Increments 0.01 A
Three-phase measuring voltage failure (fuse failure monitoring)		All U_{Ph-E} < FFM UMEAS < and at the same time all ΔI_{Ph} < FFM I_{delta} and All $I_{Ph} > (I_{Ph} >$ (Dist.))	
- FFM UMEAS <		2 V to 100 V	Increments 1 V
- FFM I_{delta}	for I_N = 1 A	0.05 A to 1.00 A	Increments 0.01 A
	for I_N = 5 A	0.25 A to 5.00 A	Increments 0.01 A
- T V SUPERVISION (wait time for additional measured voltage failure monitoring)		0.00 s to 30.00 s	Increments 0.01 s
- T mcb		0 ms to 30 ms	Increments 1 ms
Phase angle positive sequence power		Message when the angle lies inside the area of the P-Q level parameterised by φA and φB.	
- φA, φB		0° to 259°	Increments 1°
- I1	for I_N = 1 A	0.05 A to 2.00 A	Increments 0.01 A
	for I_N = 5 A	0.25 A to 10.00 A	Increments 0.01 A
- U1		2 V to 70 V	Increments 1 V
Response Time		Approx. 30 ms	

Trip Circuit Monitoring

Number of monitored circuits	1 to 3	
Operation per circuit	With 1 binary input or with 2 binary inputs	
Pickup and Dropout Time	Approx. 1 s to 2 s	
Settable delay time for operation with 1 binary input	1 s to 30 s	Increments 1 s

4.20 Transmission of Binary Information (optional)

General

Note: The setting for remote signal reset delay for communication failure may be 0 s to 300 s or ∞. With setting ∞ annunciations are maintained indefinitely.

Remote Commands

Number of possible remote commands	4		
Operating times, total approx.			
Transmission rate	512 kbit/s	128 kbit/s	64 kbit/s
2 ends, minimum, typical	12 ms 14 ms	14 ms 16 ms	16 ms 18 ms
3 ends, minimum, typical	13 ms 15 ms	16 ms 19 ms	21 ms 24 ms

Drop-off times, total approx.			
Transmission rate	512 kbit/s	128 kbit/s	64 kbit/s
2 ends, minimum, typical	10 ms 12 ms	12 ms 14 ms	13 ms 16 ms
3 ends, minimum, typical	10 ms 12 ms	13 ms 16 ms	18 ms 21 ms

The operating times refer to the entire signal path from the initiation of the binary inputs until the output of commands via fast output relays. For high-speed relays (7SA522*-*N/P/Q/R/S/T/E/W) approx. 5 ms can be subtracted from the time values.

Remote Indications

Number of possible remote signals	24		
Operating times, total approx.			
Transmission rate	512 kbit/s	128 kbit/s	64 kbit/s
2 ends, minimum, typical	12 ms 14 ms	14 ms 16 ms	16 ms 18 ms
3 ends, minimum, typical	13 ms 15 ms	16 ms 19 ms	21 ms 24 ms

Drop-off times, total approx.			
Transmission rate	512 kbit/s	128 kbit/s	64 kbit/s
2 ends, minimum, typical	10 ms 12 ms	12 ms 14 ms	13 ms 16 ms
3 ends, minimum, typical	10 ms 12 ms	13 ms 16 ms	18 ms 21 ms

The operating times refer to the entire signal path from the initiation of the binary inputs until the output of commands via fast output relays. For high-speed relays (7SA522*-*N/P/Q/R/S/T/W) approx. 5 ms can be subtracted from the time values.

4.21 User-defined Functions (CFC)

Function Blocks and their Possible Allocation to the Priority Classes

Function Module	Explanation	Task Level			
		MW_BEARB	PLC1_BEARB	PLC_BEARB	SFS_BEARB
ABSVALUE	Magnitude Calculation	X	–	–	–
ADD	Addition	X	X	X	X
ALARM	Alarm clock	X	X	X	X
AND	AND - Gate	X	X	X	X
BLINK	Flash block	X	X	X	X
BOOL_TO_CO	Boolean to Control (conversion)	–	X	X	–
BOOL_TO_DI	Boolean to Double Point (conversion)	–	X	X	X
BOOL_TO_IC	Bool to Internal SI, Conversion	–	X	X	X
BUILD_DI	Create Double Point Annunciation	–	X	X	X
CMD_CANCEL	Cancel command	X	X	X	X
CMD_CHAIN	Switching Sequence	–	X	X	–
CMD_INF	Command Information	–	–	–	X
COMPARE	Measured value comparison	X	X	X	X
CONNECT	Connection	–	X	X	X
COUNTER	Counter	X	X	X	X
CV_GET_STATUS	Information status of the metered value, decoder	X	X	X	X
D_FF	D- Flipflop	–	X	X	X
D_FF_MEMO	Status Memory for Restart	X	X	X	X
DI_GET_STATUS	Information status double point indication, decoder	X	X	X	X
DI_SET_STATUS	Double point indication with status, encoder	X	X	X	X
DI_TO_BOOL	Double Point to Boolean (conversion)	–	X	X	X
DINT_TO_REAL	DoubleInt after real, adapter	X	X	X	X
DIST_DECODE	Double point indication with status, decoder	X	X	X	X
DIV	Division	X	X	X	X
DM_DECODE	Decode Double Point	X	X	X	X
DYN_OR	Dynamic OR	X	X	X	X
LIVE_ZERO	Live zero monitoring, nonlinear characteristic	X	–	–	–
LONG_TIMER	Timer (max.1193h)	X	X	X	X
LOOP	Feedback Loop	X	X	X	X
LOWER_SETPOINT	Lower Limit	X	–	–	–
MUL	Multiplication	X	X	X	X
MV_GET_STATUS	Information status measured value, decoder	X	X	X	X
MV_SET_STATUS	Measured value with status, encoder	X	X	X	X
NAND	NAND - Gate	X	X	X	X

NEG	Negator	X	X	X	X
NOR	NOR - Gate	X	X	X	X
OR	OR - Gate	X	X	X	X
REAL_TO_DINT	Real after DoubleInt, adapter	X	X	X	X
REAL_TO_UINT	Real after U-Int, adapter	X	X	X	X
RISE_DETECT	Rising edge detector	X	X	X	X
RS_FF	RS- Flipflop	–	X	X	X
RS_FF_MEMO	Status memory for restart	X	X	X	X
SI_GET_STATUS	Information status single point indication, decoder	X	X	X	X
SI_SET_STATUS	Single point indication with status, encoder	X	X	X	X
SQUARE_ROOT	Root Extractor	X	X	X	X
SR_FF	SR- Flipflop	–	X	X	X
SR_FF_MEMO	Status memory for restart	X	X	X	X
ST_AND	AND gate with status	X	X	X	X
ST_NOT	Negator with status	X	X	X	X
ST_OR	OR gate with status	X	X	X	X
SUB	Substraction	X	X	X	X
TIMER	Timer	–	X	X	–
TIMER_SHORT	Simple timer	–	X	X	–
UINT_TO_REAL	U-Int to real, adapter	X	X	X	X
UPPER_SETPOINT	Upper Limit	X	–	–	–
X_OR	XOR - Gate	X	X	X	X
ZERO_POINT	Zero Supression	X	–	–	–

General limits

Description	Limit	Comments
Maximum number of all CFC charts considering all task levels	32	When the limit is exceeded, an error message is output by the device. Consequently, the device is put into monitoring mode. The red ERROR-LED lights up.
Maximum number of all CFC charts considering one task level	16	Only error message (evolving error in processing procedure)
Maximum number of all CFC inputs considering all charts	400	When the limit is exceeded, an error message is output by the device. Consequently, the device starts monitoring. The red ERROR-LED lights up.
Maximum number of inputs of one chart for each task level (number of unequal information items of the left border per task level)	400	Only error message; here the number of elements of the left border per task level is counted. Since the same information is indicated at the border several times, only unequal information is to be counted.
Maximum number of reset-resistant flipflops D_FF_MEMO, RS_FF_MEMO, SR_FF_MEMO	350	When the limit is exceeded, an error indication is output by the device. Consequently, the device is put into monitoring mode. The red ERROR-LED lights up.

Device-specific Limits

Description	Limit	Comments
Maximum number of concurrent changes to planned inputs per task level Chart inputs per task level	50	When the limit is exceeded, an error message is output by the device. Consequently, the device is put into monitoring mode. The red ERROR-LED lights up.
Maximum number of chart outputs per task level	150	

Additional Limits

Additional limits [1] for the following 4 CFC blocks:				
Task Level				
	TIMER[2) 3)]	TIMER_SHORT[2) 3)]	CMD_CHAIN	D_FF_MEMO
MW_BEARB				350
PLC1_BEARB	15	30	20	
PLC_BEARB				
SFS_BEARB				

1) When the limit is exceeded, an error indication is output by the device. Consequently, the device starts monitoring. The red ERROR-LED lights up.

2) TIMER and TIMER_SHORT share the available timer resources. The relation is TIMER = 2 · system timer and TIMER_SHORT = 1 · system timer. For the maximum used timer number the following side conditions are valid: (2 · number of TIMERs + number of TIMER_SHORTs) < 20. The LONG_TIMER is not subject to this condition.

3) The time values for the blocks TIMER and TIMER_SHORT must not be smaller than the time resolution of the device, i.e. 5 ms, otherwise the blocks will not start with the starting impulse issued.

Maximum Number of TICKS in the Task Levels

Task Level	Limit in TICKS [1]
MW_BEARB (Measured Value Processing)	10 000
PLC1_BEARB (Slow PLC Processing)	1 900
PLC_BEARB (Fast PLC Processing)	200
SFS_BEARB (switchgear interlocking)	10 000

1) When the sum of TICKS of all blocks exceeds the limits before-mentioned, an error message is output by CFC.

Processing Times in TICKS required by the Individual Elements

Individual Element		Number of TICKS
Block, basic requirement		5
Each input more than 3 inputs for generic modules		1
Connection to an input signal		6
Connection to an output signal		7
Additional for each chart		1
Operating sequence module	CMD_CHAIN	34
Flipflop	D_FF_MEMO	6
Loop module	LOOP	8
Decoder	DM_DECODE	8
Dynamic OR	DYN_OR	6
Addition	ADD	26
Subtraction	SUB	26
Multiplication	MUL	26
Division	DIV	54
Square root	SQUARE_ROOT	83
Timer	TIMER_SHORT	8
Timer	LONG_TIMER	11
Blinker lamp	BLINK	11
Counter	COUNTER	6
Adaptor	REAL_TO_DINT	10
Adaptor	REAL_TO_UINT	10
Alarm clock	ALARM	21
Comparison	COMPARE	12
Decoder	DIST_DECODE	8

4.22 Additional Functions

Measured values

Operational measured values for currents	I_{L1}; I_{L2}; I_{L3}; $3I_0$; I_1; I_2; I_Y; $I_{P;}$ $I_{EE;}$ in A primary and secondary and in % of $I_{NOperation}$
Tolerance	0.5 % of measured value or 0.5 % of I_N
Operational measured values for voltages	U_{L1-E}, U_{L2-E}, U_{L3-E}; $3U_0$, U_0, U_1, U_2, U_{1Co}, U_{sy2} (phase-to-earth connection) in kV primary, in V secondary or in % of $U_{NOperation}/\sqrt{3}$
Tolerance	0.5 % of measured value, or 0.5 % of U_N
Operational measured values for voltages	U_x, U_{en} in V secondary
Tolerance	0.5 % of measured value, or 0.5 % of U_N
Operational measured values for voltages	U_{L1-L2}, U_{L2-L3}, U_{L3-L1}, U_{sy2} (phase-to-phase connection) in kV primary, in V secondary or in % of $U_{NOperation}$
Tolerance	0.5 % of measured value or 0.5 % of U_N
Operational measured values for impedances	R_{L1-L2}, R_{L2-L3}, R_{L3-L1}, R_{L1-E}, R_{L2-E}, R_{L3-E}, X_{L1-L2}, X_{L2-L3}, X_{L3-L1}, X_{L1-E}, X_{L2-E}, X_{L3-E} in Ω primary and secondary
Operational measured values for power	S; P; Q (apparent, active and reactive power) in MVA; MW; Mvar primary and % S_N (operational nominal power) = $\sqrt{3} \cdot U_{NOp} \cdot I_{NOperation}$
Tolerance	1 % of S_N at I/I_N and U/U_N in range 50 to 120 %
	1 % of P_N at I/I_N and U/U_N in range 50 to 120 % and ABS(cos φ) in range 0.7 to 1
	1 % of Q_N at I/I_N and U/U_N in range 50 to 120 % and ABS(cos φ) in range 0.7 to 1
Operating measured value for power factor	cos φ
Tolerance	0,02
Counter values for energy	Wp, Wq (real and reactive energy) In kWh (MWh or GWh) and In kVARh (MVARh or GVARh)
Tolerance [1)]	5 % for $I > 0.5\ I_N$, $U > 0.5\ U_N$ and $\lvert \cos\varphi \rvert \geq 0.707$
Operating measured values for frequency	f in Hz and % f_N
Range	94 % to 106 % of f_N
Tolerance	10 mHz and 0.02 %
Operational measured values for synchro check	U_{sy1}; U_{sy2}; U_{diff} in kV primary f_{sy1}; f_{sy2}; f_{diff} in Hz; φ_{diff} in °
Long-term mean value	I_{L1}dmd; I_{L2}dmd; I_{L3}dmd; I_{1d}md; Pdmd; Pdmd Forw, Pdmd Rev; Qdmd; Qdmd Forw; Qdmd Rev; Sdmd In primary values
Minimum and maximum values	I_{L1}; I_{L2}; I_{L3}; I_1; I_{L1}d; I_{L2}d; I_{L3}d; I_1d; U_{L1-E}; U_{L2-E}; U_{L3-E}; U_1; U_{L1-L2}; U_{L2-L3}; U_{L3-L1};$3U_0$; P Forw; P Rev; Q Forw; Q Rev; S; Pd; Qd; Sd; cos φ Pos; cos φ Neg; f In primary values

Remote measured values for currents	I_{L1}, I_{L2}, I_{L3} of remote end in A primary $\varphi(I_{L1})$; $\varphi(I_{L2})$; $\varphi(I_{L3})$, referred to the local voltage U_{L1-E} in °
Remote measured values for voltages	U_{L1}; U_{L2}; U_{L3} of remote end in kV primary $\varphi(U_{L1})$; $\varphi(U_{L2})$; $\varphi(U_{L3})$, referred to the local voltage U_{L1-E} in °

1) At nominal frequency

Operational Indication Buffer

Capacity	200 records

Fault Logging

Capacity	8 faults with a total of max. 600 messages and up to 100 binary signal traces (marks)

Fault Recording

Number of stored fault records	Max. 8
Storage time	Max. 5 s for each fault Approx. 15 s in total
Sampling rate at f_N = 50 Hz	1 ms
Sampling rate at f_N = 60 Hz	0.83 ms

Statistics (serial protection data interface)

Availability of transmission for applications with protection data interface	Availability in %/min and %/h
Delay time of transmission	Resolution 0.01 ms

Switching Statistics

Number of trip events caused by the device	Separately for each breaker pole (if single-pole tripping is possible)
Number of automatic reclosures initiated by the device	Separate for 1-pole and 3-pole AR; Separately for 1st AR cycle and for all further cyles
Total of interrupted currents	Pole segregated
Maximum interrupted current	Pole segregated

Real Time Clock and Buffer Battery

Resolution for operational messages	1 ms
Resolution for fault messages	1 ms
Back-up battery	Type: 3 V/1 Ah, Type CR 1/2 AA Self-discharging time approx. 10 years

IEC 61850 GOOSE (Inter-device communication)

Der Kommunikationsdienst GOOSE der IEC 61850 ist qualifiziert für die Schaltanlagenverriegelung. Die Laufzeit von GOOSE-Nachrichten im Anregezustand des Schutzes hängt von der Anzahl der angeschlossenen IEC 61850-Clients ab. Für die Geräte sind Anwendungen mit Schutzfunktionen hinsichtlich ihrer erforderlichen Laufzeit zu prüfen. Im Einzelfall müssen die Anforderungen mit dem Hersteller abgestimmt werden, um eine sichere Funktion der Applikation zu erreichen.

4.23 Dimensions

4.23.1 Housing for Panel Flush Mounting or Cubicle Mounting (Size $^1/_2$)

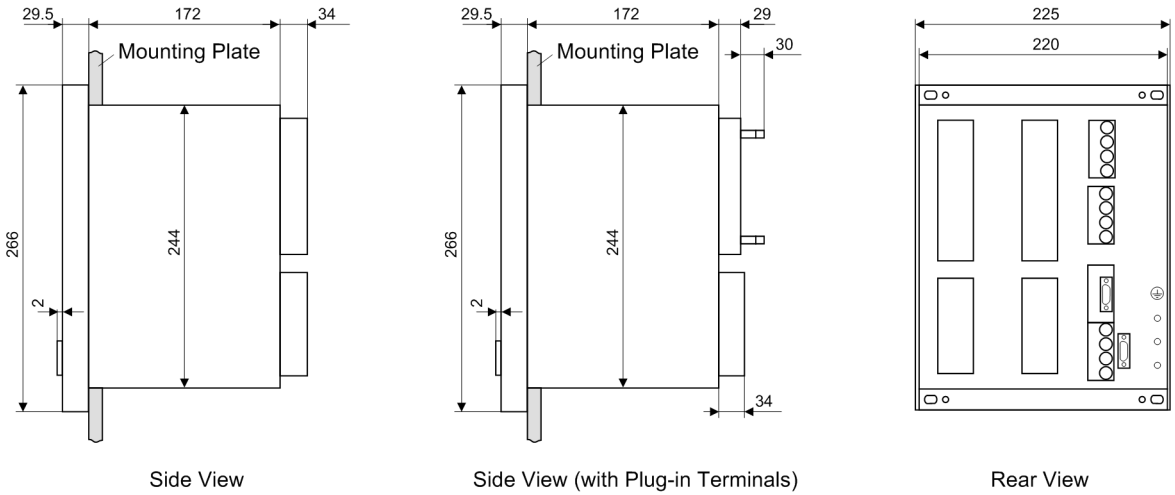

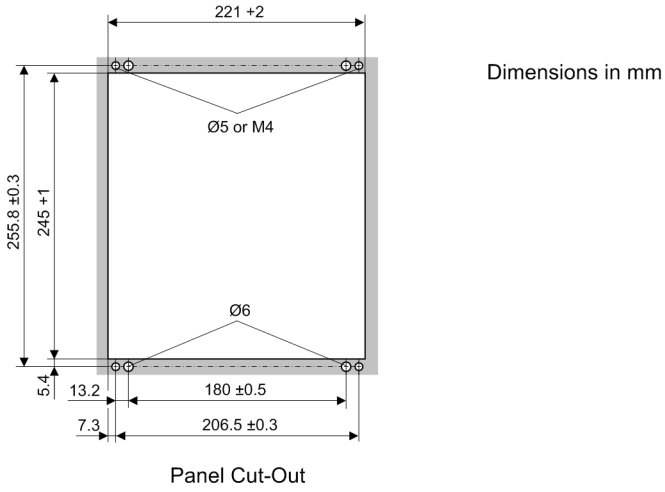

Dimensions in mm

Figure 4-7 Dimensions of a device for panel flush mounting or cubicle installation (size $^1/_2$)

4.23.2 Housing for Panel Flush Mounting or Cubicle Mounting (Size $^1/_1$)

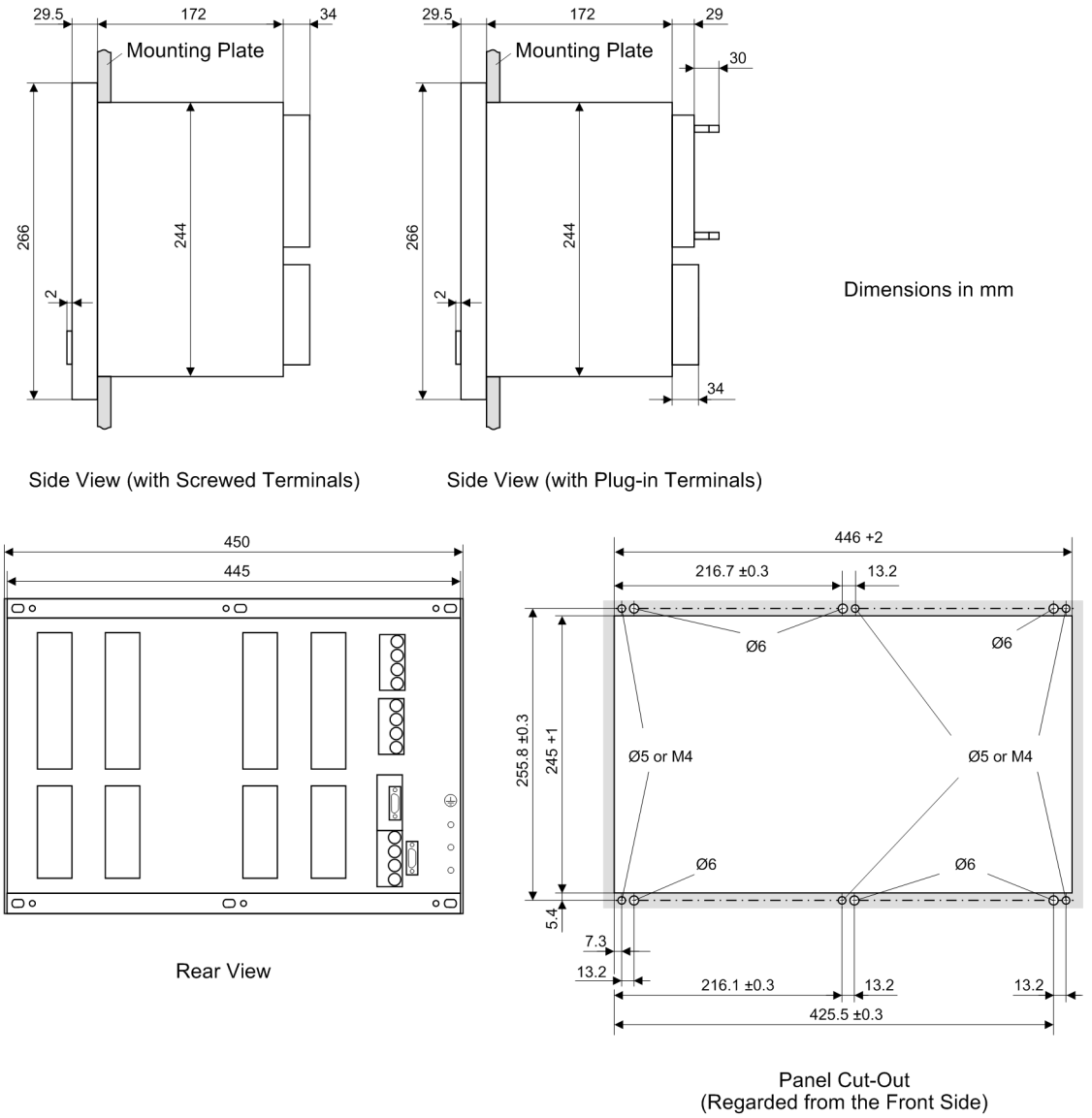

Figure 4-8 Dimensions of a device for panel flush mounting or cubicle installation (size $^1/_1$)

4.23.3 Panel Surface Mounting (Housing Size $^1/_2$)

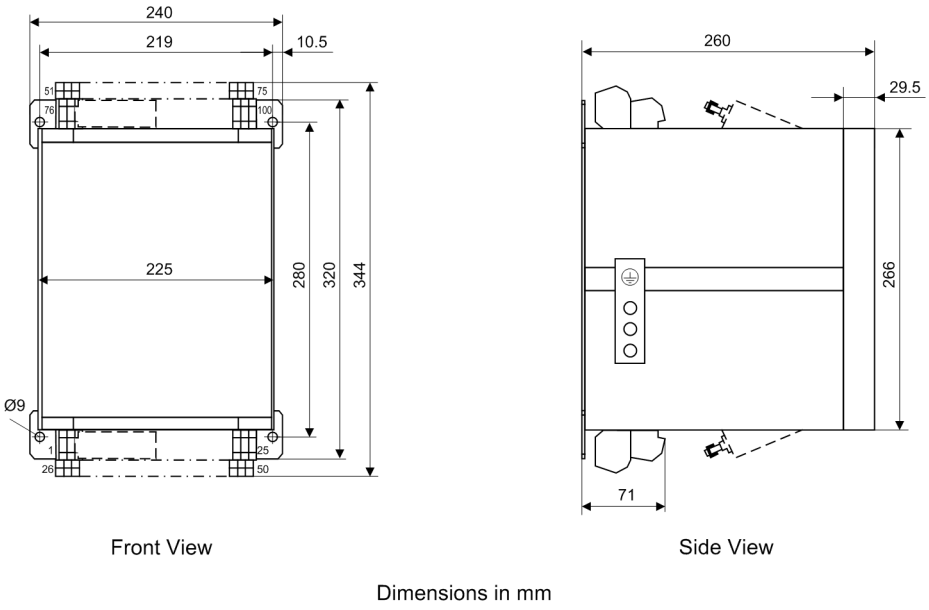

Figure 4-9 Dimensions of a device for panel surface mounting (size $^1/_2$)

4.23.4 Panel Surface Mounting (Housing Size $^1/_1$)

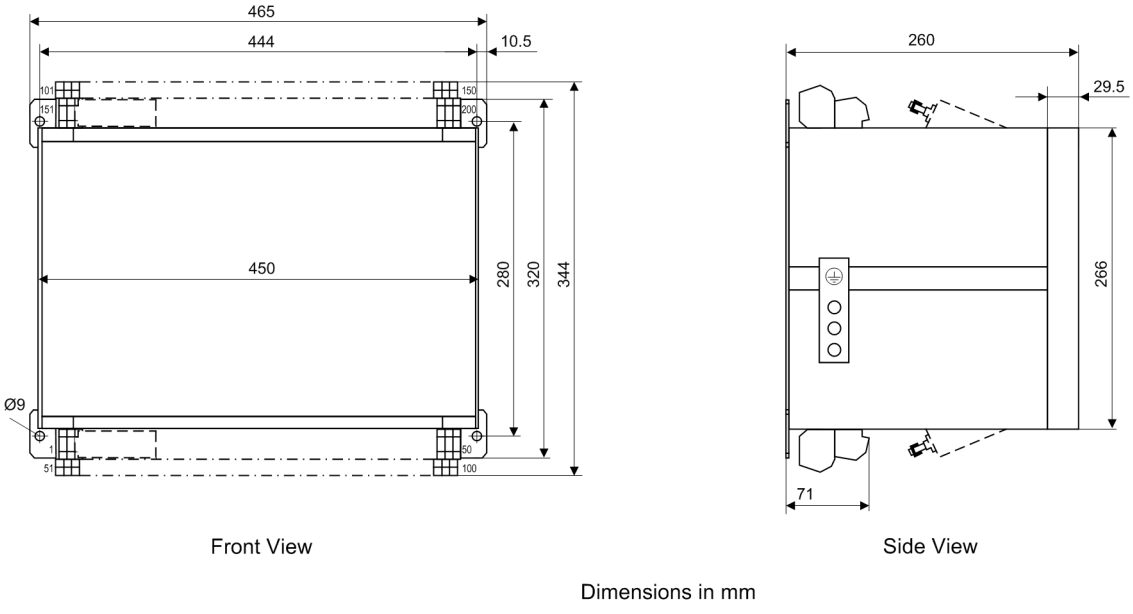

Figure 4-10 Dimensions of a device for panel surface mounting (size $^1/_1$)

■

Appendix A

This appendix is primarily a reference for the experienced user. It contains the ordering data, overview and connection diagrams, default settings as well as tables with all parameters and information for the device with its maximum extent.

A.1	Ordering Information and Accessories	534
A.2	Terminal Assignments	543
A.3	Connection Examples	561
A.4	Default Settings	568
A.5	Protocol-dependent Functions	573
A.6	Functional Scope	574
A.7	Settings	576
A.8	Information List	593
A.9	Group Alarms	627
A.10	Measured Values	628

A.1 Ordering Information and Accessories

A.1.1 Ordering Information

A.1.1.1 Ordering Code (MLFB)

							7		8	9	10	11	12		13	14	15	16				
Numerical Distance Protection (position 1 to 9)	7	S	A	5	2	2		–						–					+	L/M/N		

Measuring Inputs (4 x U, 4 x I)	Pos. 7
I_{Ph} = 1 A, I_E = 1 A (min. = 0.05 A)	1
I_{ph} = 1 A, I_e = sensitive (min. = 0.003 A)	2
I_{Ph} = 5 A, I_E = 5 A (min. = 0.25 A)	5
I_{ph} = 5 A, I_e = sensitive (min. = 0.003 A)	6

Auxiliary Voltage (Power Supply, Pickup Threshold of Binary Inputs)	Pos. 8
24 to 48 VDC, binary input threshold 17 V [2]	2
60 to 125 VDC [1], binary input threshold 17 V [2]	4
110 to 250 VDC [1], 115 VAC, Binary Input Threshold 73 V [2]	5
220 to 250 VDC, 115 VAC, binary input threshold 154 V [2]	6

Housing / Number of Binary Inputs (BI) and Outputs (BO)	Pos. 9
Flush mounting housing with screwed terminals $^1/_2$ x 19", 8 BI, 16 BO	A
Flush mounting housing with screwed terminals $^1/_1$ x 19", 16 BI, 24 BO	C
Flush mounting housing with screwed terminals $^1/_1$ x 19", 24 BI, 32 BO	D
Surface mounting housing with two-tier terminals $^1/_2$ x 19", 8 BI, 16 BO	E
Surface mounting housing with two-tier terminals $^1/_1$ x 19", 16 BI, 24 BO	G
Surface mounting housing with two-tier terminals $^1/_1$ x 19", 24 BI, 32 BO	H
Flush mounting housing with plug-in terminals $^1/_2$ x 19", 8 BI, 16 BO	J
Flush mounting housing with plug-in terminals $^1/_1$ x 19", 16 BI, 24 BO	L
Flush mounting housing with plug-in terminals $^1/_1$ x 19", 24 BI, 32 BO	M
Flush mounting housing with screwed terminals, $^1/_1$ x 19", 16 BI, 24 BO (thereof 5 BO with high-speed relay)	N
Flush mounting housing with screwed terminals, $^1/_1$ x 19”, 24 BI, 32 BO (thereof 5 BO with high-speed relay)	P
Surface mounting housing with two-tier terminals, $^1/_1$ x 19”, 16 BI, 24 BO (thereof 5 BO with high-speed relay)	Q
Surface mounting housing with two-tier terminals, $^1/_1$ x 19”, 24 BI, 32 BO (thereof 5 BO with high-speed relay)	R
Flush mounting housing with plug-in terminals, $^1/_1$ x 19", 16 BI, 24 BO (thereof 5 BO with high-speed relay)	S
Flush mounting housing with plug-in terminals, $^1/_1$ x 19", 24 BI, 32 BO (thereof 5 BO with high-speed relay)	T
Flush mounting housing with screwed terminals, $^1/_1$ x 19”, 22 BI, 44 BO	U
Flush mounting housing with screwed terminals, $^1/_1$ x 19", 24 BI, 32 BO (thereof 10 BO with high-speed relay)	W

[1] with plug-in jumper one of the 2 voltage ranges can be selected

[2] for each binary input one of 3 pickup threshold ranges can be selected with plug-in jumper

									7		8	9	10	11	12		13	14	15	16			
Numerical Distance Protection (position 10 to 16)	7	S	A	5	2	2		–								–					+	L/M/N	

Region-specific Default/Language Settings and Function Versions [1])	Pos. 10
Region DE, German language (language can be changed)	A
Region World, English language (GB) (language can be changed)	B
Region US, language English (US) (language can be changed)	C
Region FR, French language (language can be changed)	D
Region world, Spanish language (language can be changed)	E
Region world, Italian language (language can be changed)	F

[1]) Regulations for Region-specific Default and Function Settings:
Region World: Default setting f = 50 Hz and line length in km, no zero sequence power protection.
Region US: Default setting f = 60 Hz and line length in miles, only ANSI-inverse characteristic available, no zero sequence power protection.
Region FR: Default setting f = 50 Hz and line length in km, with zero sequence power protection and weak infeed logic according to the French Specification.
Region DE: Default setting f = 50 Hz and line length in km, only IEC inverse characteristic available, no logarithmic inverse characteristic for earth fault protection, no zero sequence power protection, U0 inverse for earth fault protection available.

									7		8	9	10	11	12		13	14	15	16			
Numerical Distance Protection (position 10 to 16)	7	S	A	5	2	2		–								–					+	L/M/N	

Port B	Pos. 11
None	0
System port, IEC protocol 60870-5-103, electrical RS232	1
System port, IEC protocol 60870-5-103, electrical RS485	2
System port, IEC protocol 60870-5-103, optical 820 nm, ST connector	3
System port, Profibus FMS slave, electrical RS485	4
System port, Profibus FMS slave, optical 820°nm, double ring, ST-connector	6
For further protocols see additional information L (position 21 to 22)	9

Port C and D	Pos. 12
None	0
DIGSI/Modem, electrical RS232, port C	1
DIGSI/Modem, electrical RS485, port C	2
DIGSI/Modem, optical 820 nm, ST-connector, port C	3
With port C and D see additional information M (position 23 to 24)	9

							7		8	9	10	11	12		13	14	15	16		
Numerical Distance Protection (position 21 to 22)	7	S	A	5	2	2		–						–					+	L

Additional information L, further protocols port B	Position 21, 22
System port, Profibus DP slave, electrical RS485	0, A
System port, Profibus DP slave, optical 820 nm, double ring, ST-connector	0, B
System port, DNP3.0, electrical RS485	0, G
System port, DNP3.0, optical 820 nm, double ring, ST-connector	0, H
System port, IEC 61850, 100 MBit Ethernet, double, electrical	0, R
System port, IEC 61850, 100 MBit Ethernet, double, optical	0, S

							7		8	9	10	11	12		13	14	15	16		
Numerical Distance Protection (position 23 to 24)	7	S	A	5	2	2		–						–					+	M

Additional information M, port C	Pos. 23
None	0
DIGSI/Modem, electrical RS232	1
DIGSI/Modem, electrical RS485	2
DIGSI/Modem, Optical 820 nm, ST-Connector	3

Additional Information M, Port D	Pos. 24
FO5 optical 820 nm, 2-ST connector, length of optical fibre up to 1.5 km for multimode-fibre for the communication converter or FO direct connection	A
FO5 optical 820 nm, 2-ST connector, length of optical fibre up to 3.5 km for multimode-fibre for FO direct connection	B
FO17 optical 1300 nm, 2-LC connector, length of optical fibre up to 24 km for monomode-fibre for FO direct connection	G
FO18 optical 1300 nm, 2-LC connector, length of optical fibre up to 60 km for monomode-fibre for FO direct connection	H
FO19 optical 1550 nm, 2-LC connector, length of optical fibre up to 100 km for monomode-fibre for FO direct connection	J
FO30 optical 820 nm, 2-ST connector, length of optical fibre up to 1.5 km for multimode-fibre for the communication networks with IEEE C37.94 interface or FO direct connection [1)]	S

[1)] This interface is **only** available in the flush-mounted housing (MLFB position 9).

							7		8	9	10	11	12		13	14	15	16						
Numerical Distance Protection (position 13 to 15)	7	S	A	5	2	2		–						–					+	L/M/N				

Functions 1	**Pos. 13**
Only three-pole tripping, without BCD-output fault location	0
Only three-pole tripping, with BCD-output fault location	1
Single/three-pole tripping, without BCD-output fault location	4
Single/three-pole tripping, with BCD-output fault location	5
With Function 1 and Port E see additional information N	9

Functions 2	**Pos. 14**
Distance pickup Z<, Polygon, without power swing option, without parallel line compensation	C
Distance pickup Z<, MHO, without power swing option, without parallel line compensation	E
Distance pickup Z<, Polygon, with power swing option, without parallel line compensation	F
Distance pickup Z<, MHO, with power swing option, without parallel line compensation	H
Distance pickup Z<, Polygon, without power swing option, with parallel line compensation [1)]	K
Distance pickup Z<, MHO, without power swing option, with parallel line compensation [1)]	M
Distance pickup Z<, Polygon, with power swing option, with parallel line compensation [1)]	N
Distance pickup Z<, MHO, with power swing option, with parallel line compensation [1)]	Q

[1)] only available with „1“ or „5“ on position 7

Functions 3				**Pos. 15**
Automatic Reclosure	Synchro-Check	Breaker Failure Protection	Voltage Protection, Frequency Protection	
without	without	without	without	A
without	without	without	with	B
without	without	with	without	C
without	without	with	with	D
without	with	without	without	E
without	with	without	with	F
without	with	with	without	G
without	with	with	with	H
with	without	without	without	J
with	without	without	with	K
with	without	with	without	L
with	without	with	with	M
with	with	without	without	N
with	with	without	with	P
with	with	with	without	Q
with	with	with	with	R

Functions 4		Pos. 16
Earth Fault Protection / Directional for Earthed Networks	Measured Values, Extended, Min/Max/Average Values	
without	without	0
without	with	1
with	without	4
with	with	5

							7		8	9	10	11	12		13	14	15	16		
Numerical Distance Protection (position 25 to 26)	7	S	A	5	2	2		–						–					+	N

Additional Specification N, Functions 1	Pos. 25
Only three-pole tripping, without BCD-output fault location	0
Only three-pole tripping, with BCD-output fault location	1
Single/three-pole tripping, without BCD-output fault location	4
Single/three-pole tripping, with BCD-output fault location	5

Additional Information N, Port E; for A) Direct Connection, B) Communication Networks	Pos. 26
Optical 820 nm, 2-ST connector, length of optical fibre up to 1.5 km for multimode-fibre (FO5); A) or B)	A
Optical 820 nm, 2-ST-connector, length of optical fibre up to 3.5 km for multimode-fibre (FO6) A)	B
Optical 1300 nm, 2-LC connector, length of optical fibre up to 24 km for monomode fibre (FO17) A)	G
Optical 1300 nm, 2-LC connector, length of optical fibre up to 60 km for monomode fibre (FO18) A)1)	H
Optical 1550 nm, 2-LC connector, length of optical fibre up to 100 km for monomode fibre (FO19) A) 1)	J
Optical 820 nm, 2-ST connector, length of optical fibre up to 1.5 km for multimode-fibre (FO30, IEEE C37.94 interface), A) or B), 1)	S

1) For direct connection over short distances, a suitable optical attenuator should be used to avoid damage to the device.

2) This interface is **only** available in the flush-mounted housing (MLFB position 9).

A.1.2 Accessories

Voltage Transformer Miniature Circuit Breaker

Nominal Values	Order No.
Thermal 1.6 A; magnetic 6 A	3RV1611-1AG14

Communication Converter

Converter for the serial connection of the 7SA522 distance protection to synchronous/asynchronous communication interfaces X.21, G.703, telecommunications or symmetrical communication cables

Name	Order Number
Optical-electrical communication converter CC-X/G with synchronous interface (X.21 with 512 kbit/s, G703 with 64 kbit/s)	7XV5662-0AA00
Optical-electrical communication converter CC-X/G with asynchronous interface (X.21 with 512 kbit/s, G703 with 64 kbit/s)	7XV5662-0AB01
2MBit optical-electrical communication converter Ku-G703 for two FO channels and RS232 interface (G703 with 512 kBits/s)	7XV5662-0AD00
Optical–electrical communication converter CC-CC with synchronous interface	7XV5662-0AC00
Optical–electrical communication converter CC-CC with asynchronous interface	7XV5662-0AC01

Wide-area fibre optical repeater

Wide-area fibre optical repeater for long-distance transmission of serial signals (up to 170 km / 105.5 miles)

Name	Order Number
Wide-area fibre optical repeater (24 km / 15 miles)	7XV5461-0BG00
Wide-area fibre optical repeater (60 km / 37.5 miles)[1)]	7XV5461-0BH00
Wide-area fibre optical repeater (100 km / 62 miles)[1)]	7XV5461-0BJ00
Wide-area fibre optical repeater (170 km / 105.5 miles)[1)]	7XV5461-0BM00
Bidirectional fibre optical repeater (40 km / 25 miles) The communication is performed via fibre-optic cables.)[2)]	7XV5461-0BK00
Bidirectional fibre optical repeater (40 km / 25 miles) The communication is performed via fibre-optic cables.)[2)]	7XV5461-0BL0

1) If wide-area fibre optical repeaters are used over distances that are below 25 km (7XV5461–0BH00) or below 50 km (7XV5461–0BJ00) or below 100 km (7XV5461–0BM00), you have to reduce the transmitting power using a set of optical attenuators (order number 7XV5107–0AA00). The two attenuators must be installed on one side.

2) A device with the order variant 7XV5461–0BK00 can only cooperate with a device of the order variant 7XV5461–0BL00.

Optical attenuators/fibre-optic cables

Designation	Order number
1 set of optical attenuators (2 pcs)	7XV5107–0AA00
Fibre-optic cables[1)]	6XV8100

[1)] Fibre-optic cables with different connectors, in different lengths and designs. More information will be available from your local Siemens sales representative.

Isolating Transformers

Isolating transformers are needed on copper lines if the longitudinal voltage induced in the pilot wires can result in more than 60 % of the test voltage at the communication converter (i.e. 3 kV for CC-CU). They are connected between the communication converter and the communication line.

Name	Order Number
Isolation transformer, test voltage 20 kV	7XR9516

External Converters

Optical interfaces for Profibus and DNP 3.0 are not possible with surface mounting housings. Please order in this case a device with the appropriate electrical RS485 interface, and the additional OLM converters listed below . **Note**: The OLM converter 6GK1502-3CB10 requires an operating voltage of DC 24 V. If the operating voltage is > DC 24 V the additional power supply 7XV5810-0BA00 is required.

Interface used	Order device with additional module/OLM converter
Profibus DP/FMS double ring	Profibus DP/FMS RS485/ 6GK1502-3CB01
DNP 3.0 820 nm	DNP 3.0 RS485/ 7XV5650-0BA00

Exchangeable Interface Modules

Name	Order Number
RS232	C53207-A351-D641-1
RS485	C73207-A351-D642-1
FO 820 nm	C53207-A351-D643-1
Profibus DP RS485	C53207-A351-D611-1
Profibus DP double ring	C53207-A351-D613-1
Profibus FMS RS485	C53207-A351-D603-1
Profibus FMS double ring	C53207-A351-D606-1
DNP 3.0 RS485	C53207-A351-D631-1
DNP 3.0 820 nm	C53207-A351-D633-1
FO5 with ST connector; 820 nm; multimode optical fibre - maximum length: 1.5 km (0.94 miles)[1)]	C53207-A351-D651-1
FO5 with ST connector; 820 nm; multimode optical fibre - maximum length: 1.5 km (0.94 miles); for surface mounting housing [1)]	C53207-A406-D49-1
FO6 with ST-connector; 820 nm; multimode optical fibre - maximum length: 3.5 km (2.2 miles)	C53207-A351-D652-1
FO6 with ST connector; 820 nm; multimode optical fibre - maximum length: 3.5 km; for surface mounting housing	C53207-A406-D50-1
FO17 with LC duplex connector; 1300 nm; monomode optical fibre - maximum length: 24 km (15 miles)	C53207-A351-D655-1
FO18 with LC duplex connector; 1300 nm; monomode optical fibre - maximum length: 60 km (37.5 miles)	C53207-A351-D656-1
FO19 with LC duplex connector; 1550 nm; monomode optical fibre - maximum length: 100 km (62.5 miles)	C53207-A351-D657-1
FO30 with ST connector; 820 nm; multimode optical fibre - maximum length: 1.5 km (0.94 miles) (IEEE C37.94 interface)[2)]	C53207-A351-D658-1
Ethernet electrical (EN 100)	C53207-A351-D675-2
Ethernet optical (EN 100)	C53207-A351-D678-1

[1)] also used for connection to the optical-electrical communication converter
[2)] Module FO30 can only be used in a flush mounting housing

Terminal Block Covering Caps

Terminal Block Covering Cap for Block Type	Order No.
18 terminal voltage, 12 terminal current block	C73334-A1-C31-1
12 terminal voltage, 8 terminal current block	C73334-A1-C32-1

Short-Circuit Links

Short Circuit Links for Purpose / Terminal Type	Order No.
Voltage connections (18 terminal or 12 terminal)	C73334-A1-C34-1
Current connections (12 terminal or 8 terminal)	C73334-A1-C33-1

Plug-in Connector

Plug-in Connector	Order No.
2-pin	C73334-A1-C35-1
3-pin	C73334-A1-C36-1

Mounting Brackets for 19" Racks

Name	Order No.
a pair of mounting rails; one for top, one for bottom	C73165-A63-D200-1

Battery

Lithium battery 3 V/1 Ah, type CR 1/2 AA	Order No.
VARTA	6127 101 501

Interface Cable

An interface cable and the DIGSI operating software are required for the communication between the SIPROTEC 4 device and a PC or laptop: The PC or laptop must run MS-WINDOWS 95, MS-WINDOWS 98, MS-WINDOWS NT 4, MS-WINDOWS 2000, MS-WINDOWS ME, MS-WINDOWS XP PRO or MS-WINDOWS VISTA

Name	Order No.
Interface cable between PC and SIPROTEC, Cable with 9-pin male/female connectors	7XV5100-4

A.2 Terminal Assignments

A.2.1 Panel Flush Mounting or Cubicle Mounting

7SA522*-*A/J

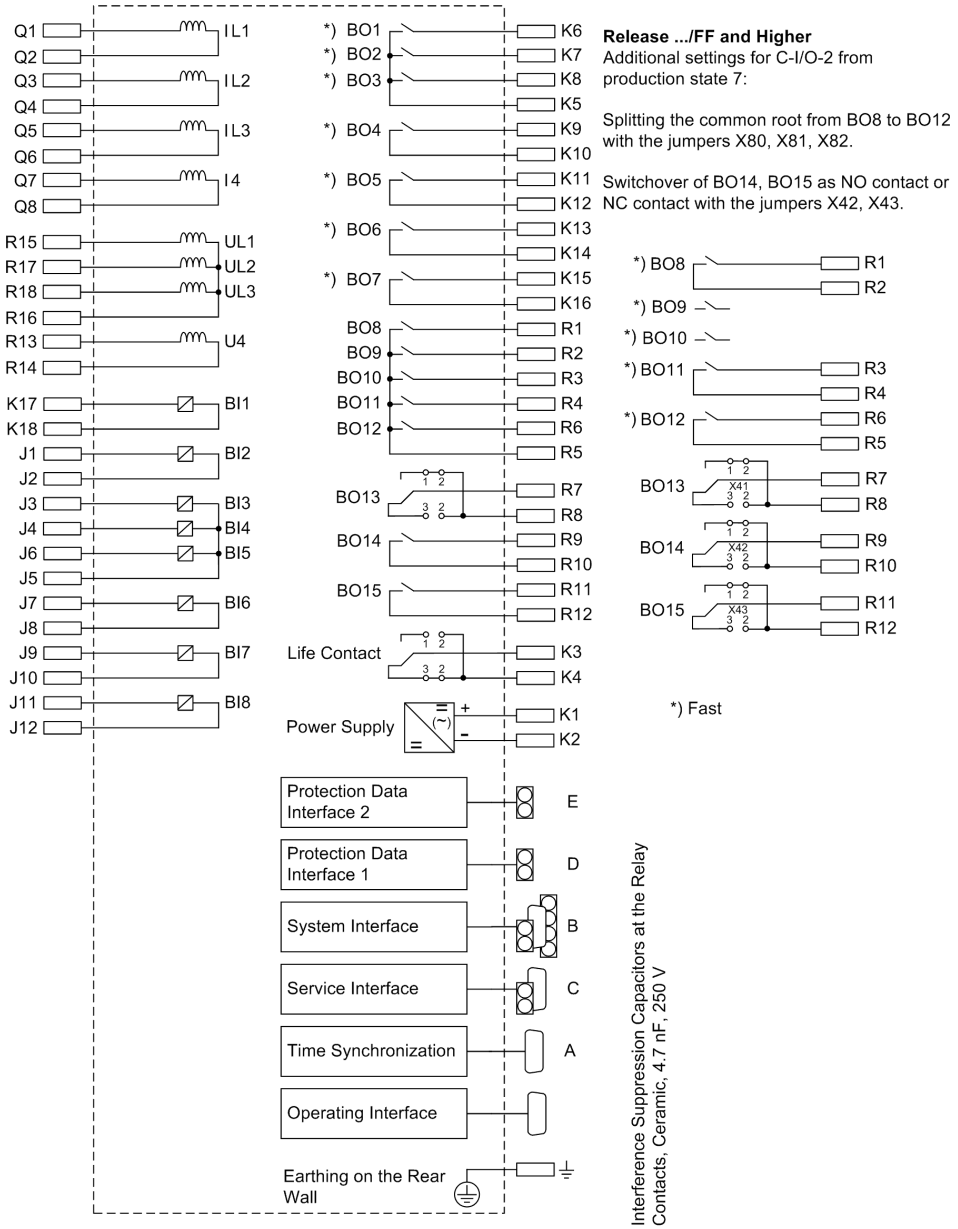

Figure A-1 General diagram 7SA522*-*A/J (panel flush mounting or cubicle mounting; size $^1/_2$)

7SA522*-*C/L

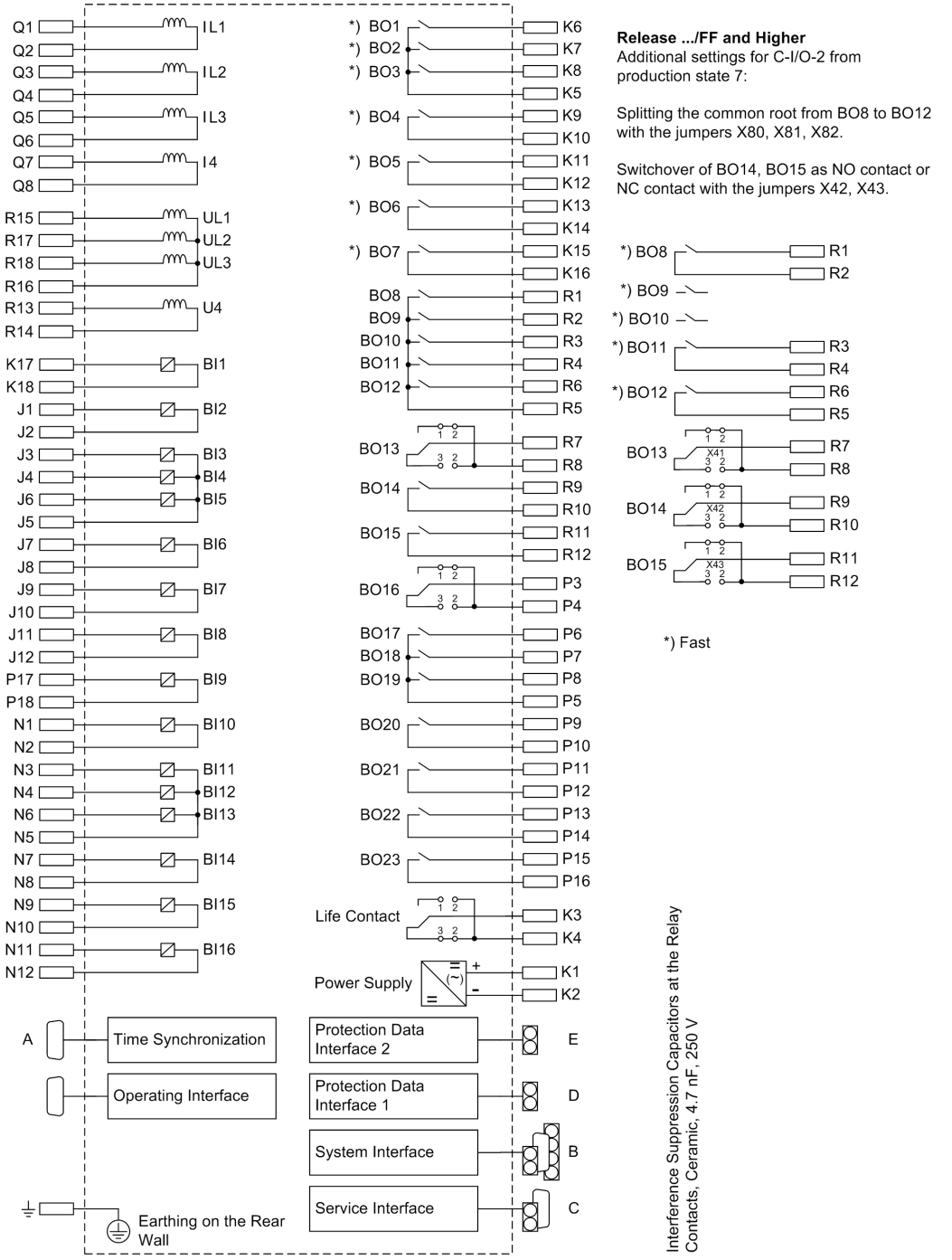

Figure A-2 General diagram 7SA522*-*C/L (panel flush mounting or cubicle mounting; size $^{1}/_{1}$)

7SA522*-*N/S

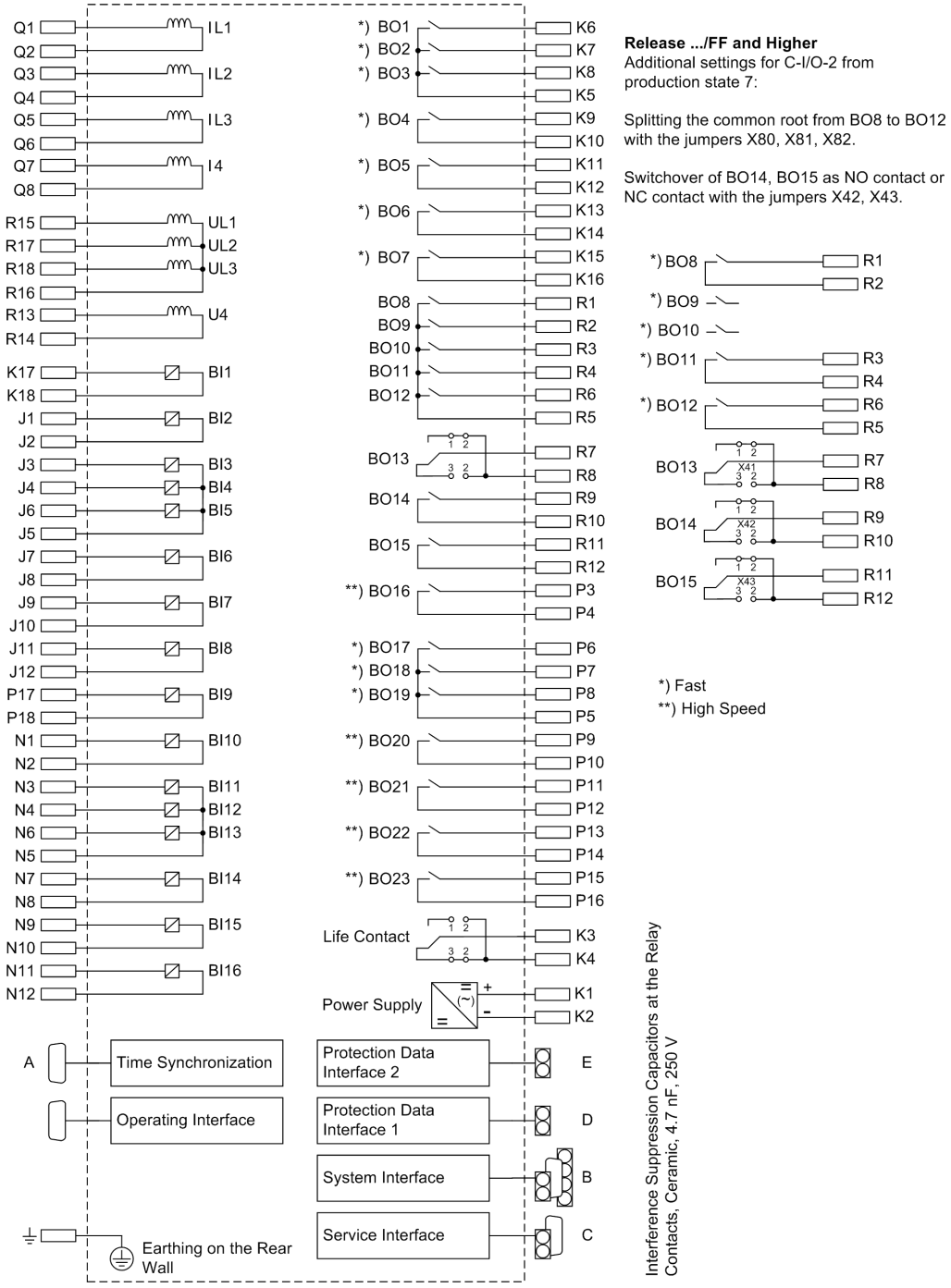

Figure A-3 General diagram 7SA522*-*N/S (panel flush mounting or cubicle mounting; size $^1/_1$)

7SA522*-*D/M

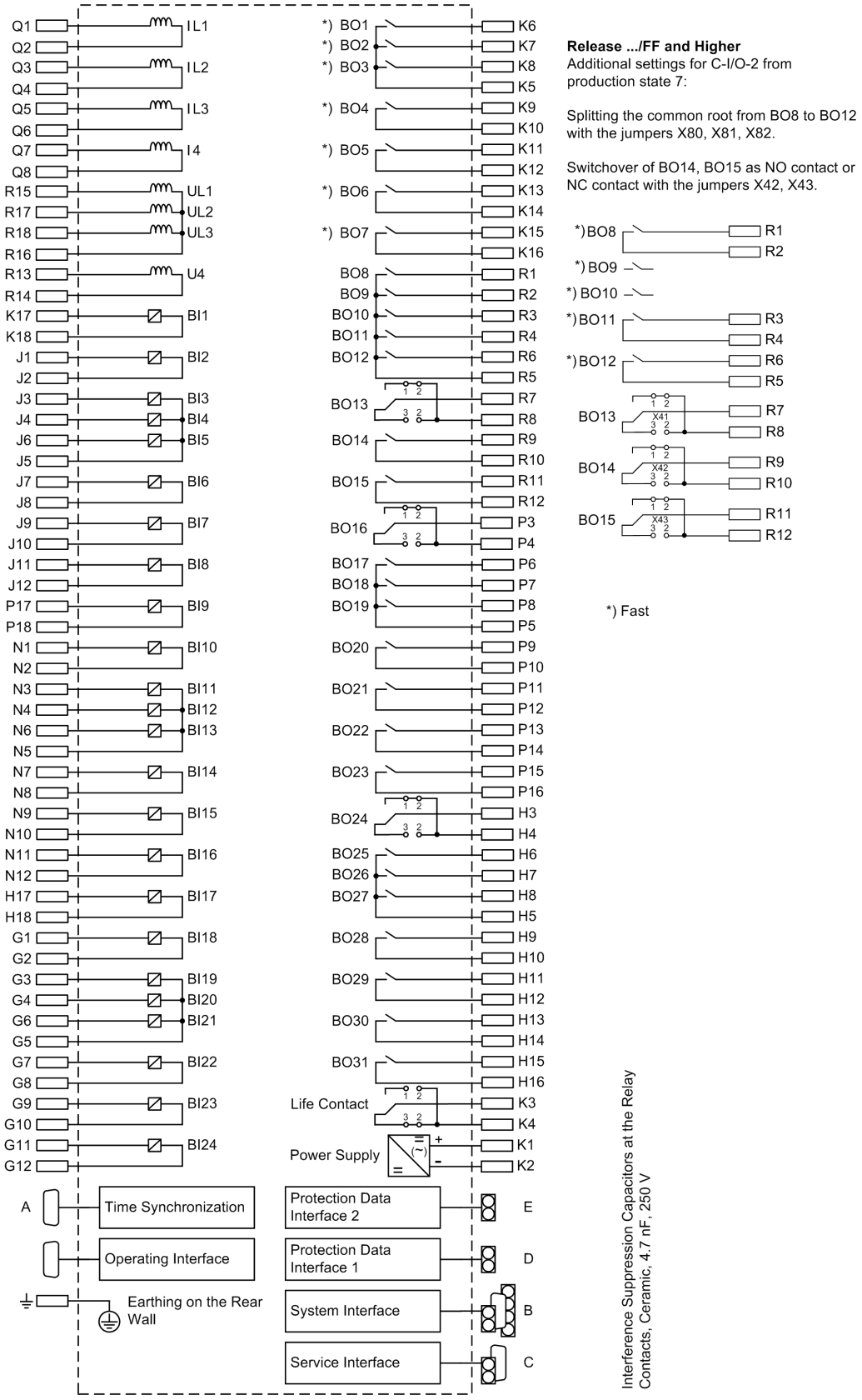

Figure A-4 General diagram 7SA522*-*D/M (panel flush mounting or cubicle mounting; size $^1/_1$)

7SA522*-*P/T

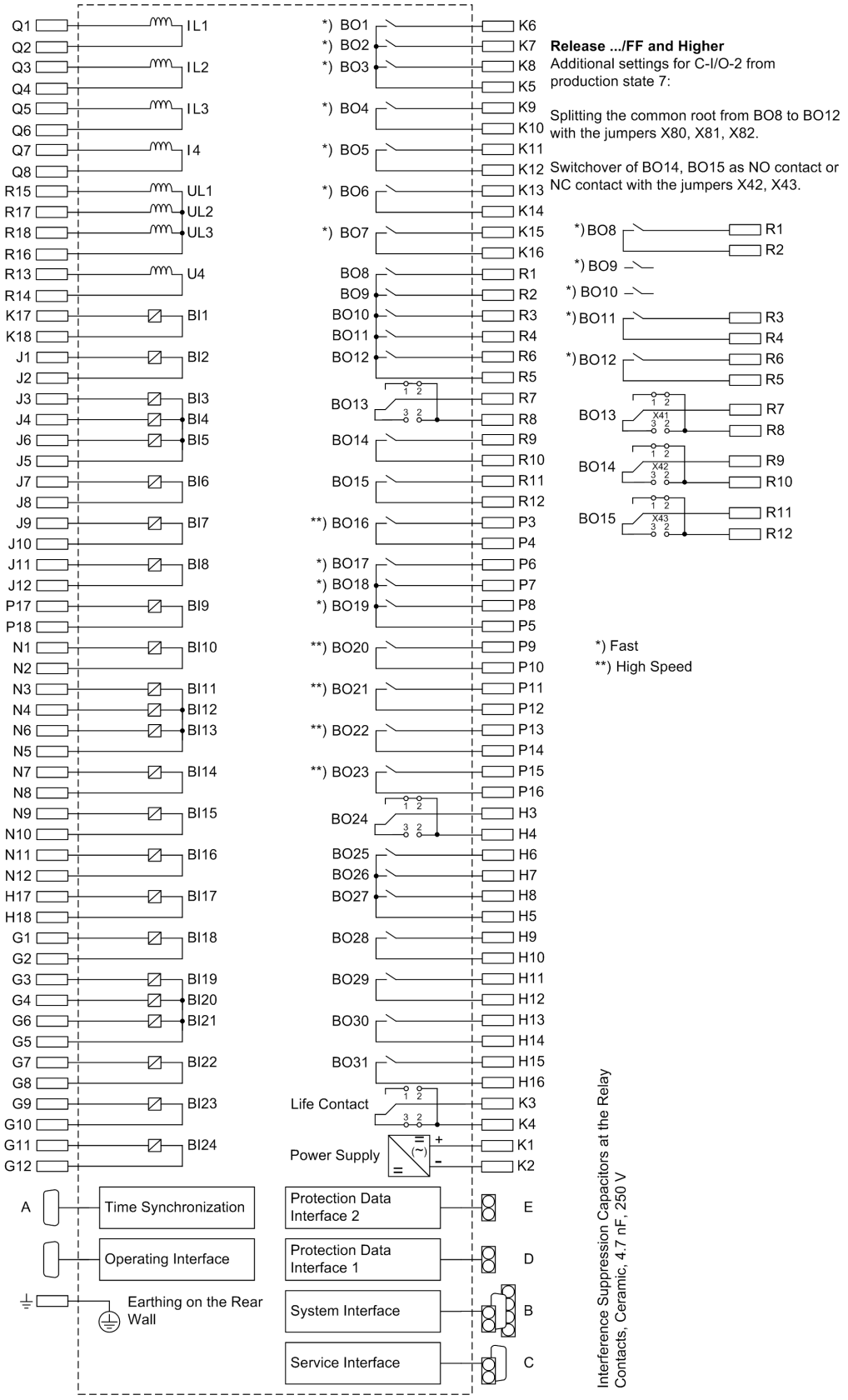

Figure A-5 General diagram 7SA522*-*P/T (panel flush mounting or cubicle mounting; size $^1/_1$)

7SA522*-*U

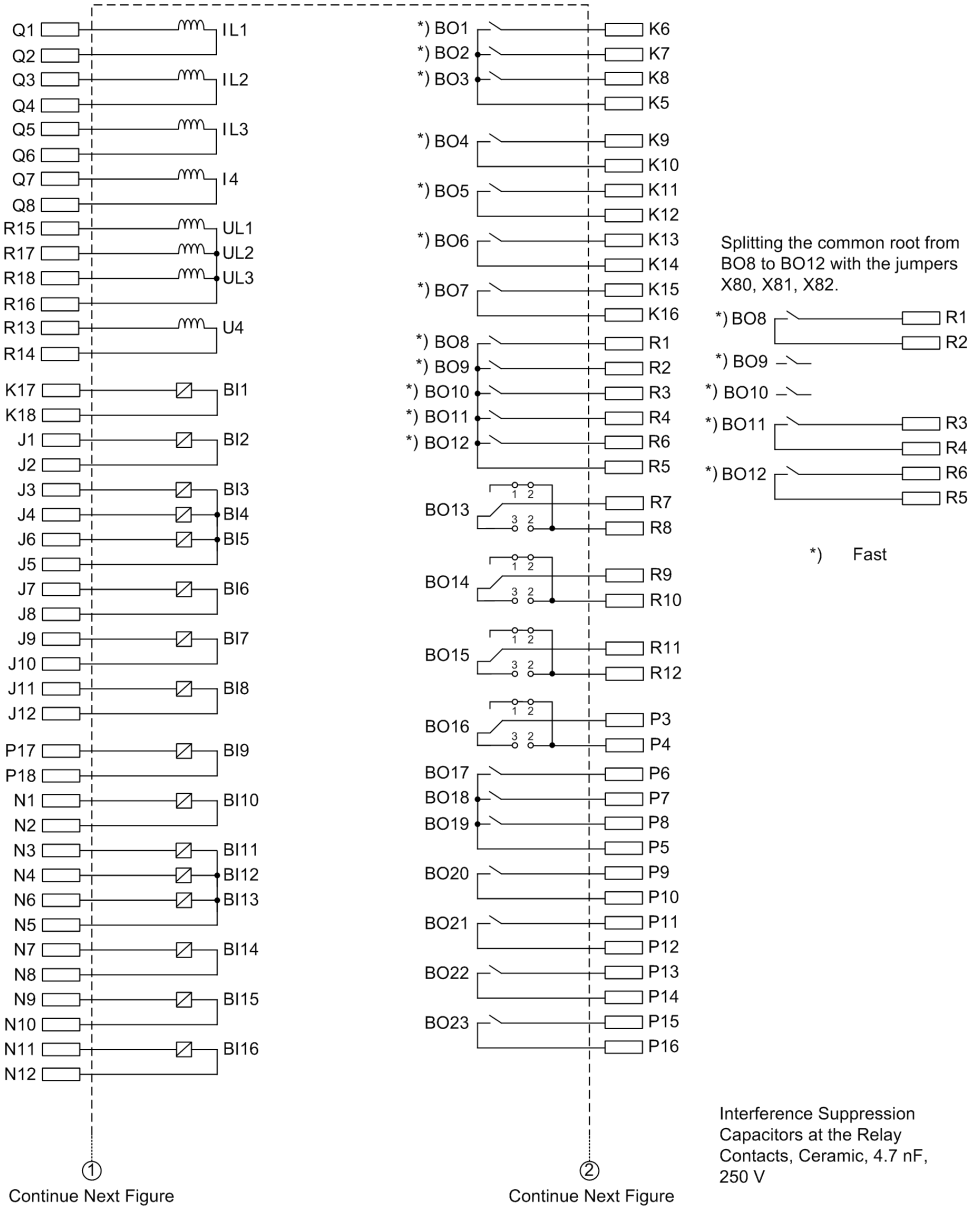
Q1
Q2
Q3
Q4
Q5
Q6
Q7
Q8
R15
R17
R18
R16
R13
R14
IL1
IL2
IL3
I4
UL1
UL2
UL3
U4
K17
K18
J1
J2
J3
J4
J6
J5
J7
J8
J9
J10
J11
J12
P17
P18
N1
N2
N3
N4
N6
N5
N7
N8
N9
N10
N11
N12
BI1
BI2
BI3
BI4
BI5
BI6
BI7
BI8
BI9
BI10
BI11
BI12
BI13
BI14
BI15
BI16
*) BO1
*) BO2
*) BO3
*) BO4
*) BO5
*) BO6
*) BO7
*) BO8
*) BO9
*) BO10
*) BO11
*) BO12
BO13
BO14
BO15
BO16
BO17
BO18
BO19
BO20
BO21
BO22
BO23
K6
K7
K8
K5
K9
K10
K11
K12
K13
K14
K15
K16
R1
R2
R3
R4
R6
R5
R7
R8
R9
R10
R11
R12
P3
P4
P6
P7
P8
P5
P9
P10
P11
P12
P13
P14
P15
P16
Splitting the common root from BO8 to BO12 with the jumpers X80, X81, X82.
*) BO8
*) BO9
*) BO10
*) BO11
*) BO12
R1
R2
R3
R4
R6
R5
*) Fast
Interference Suppression Capacitors at the Relay Contacts, Ceramic, 4.7 nF, 250 V
1
Continue Next Figure
2
Continue Next Figure

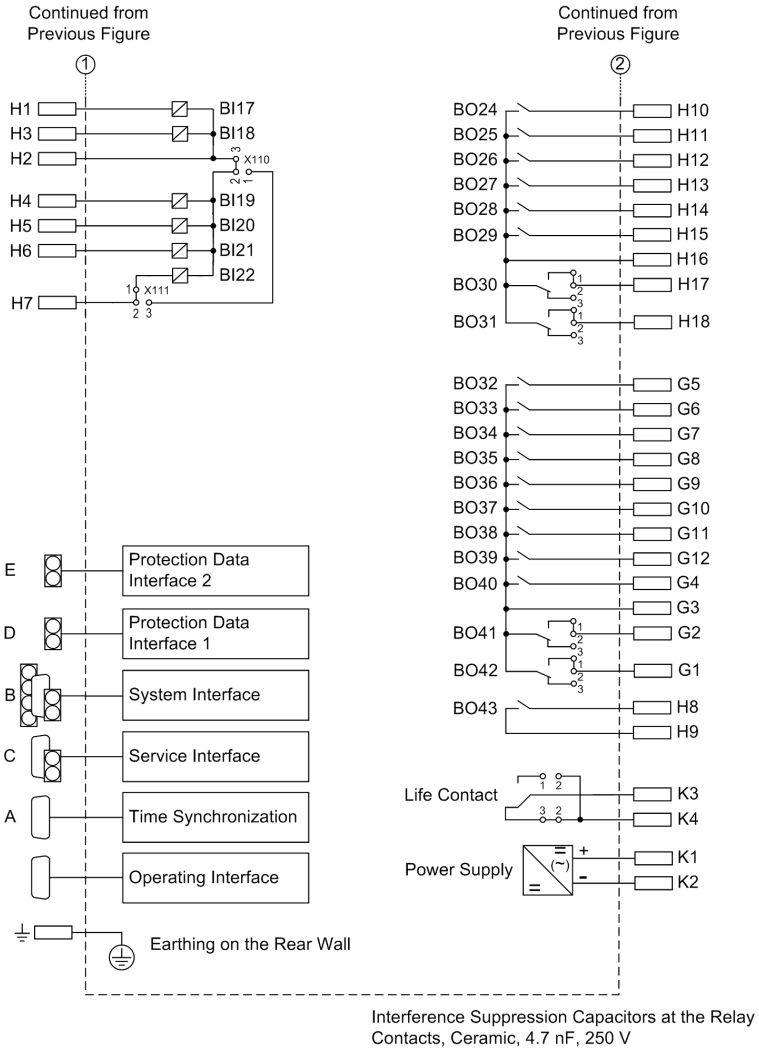

Figure A-6 General diagram 7SA522*-*U (panel flush mounting or cubicle mounting; size $^{1}/_{1}$)

7SA522*-*W

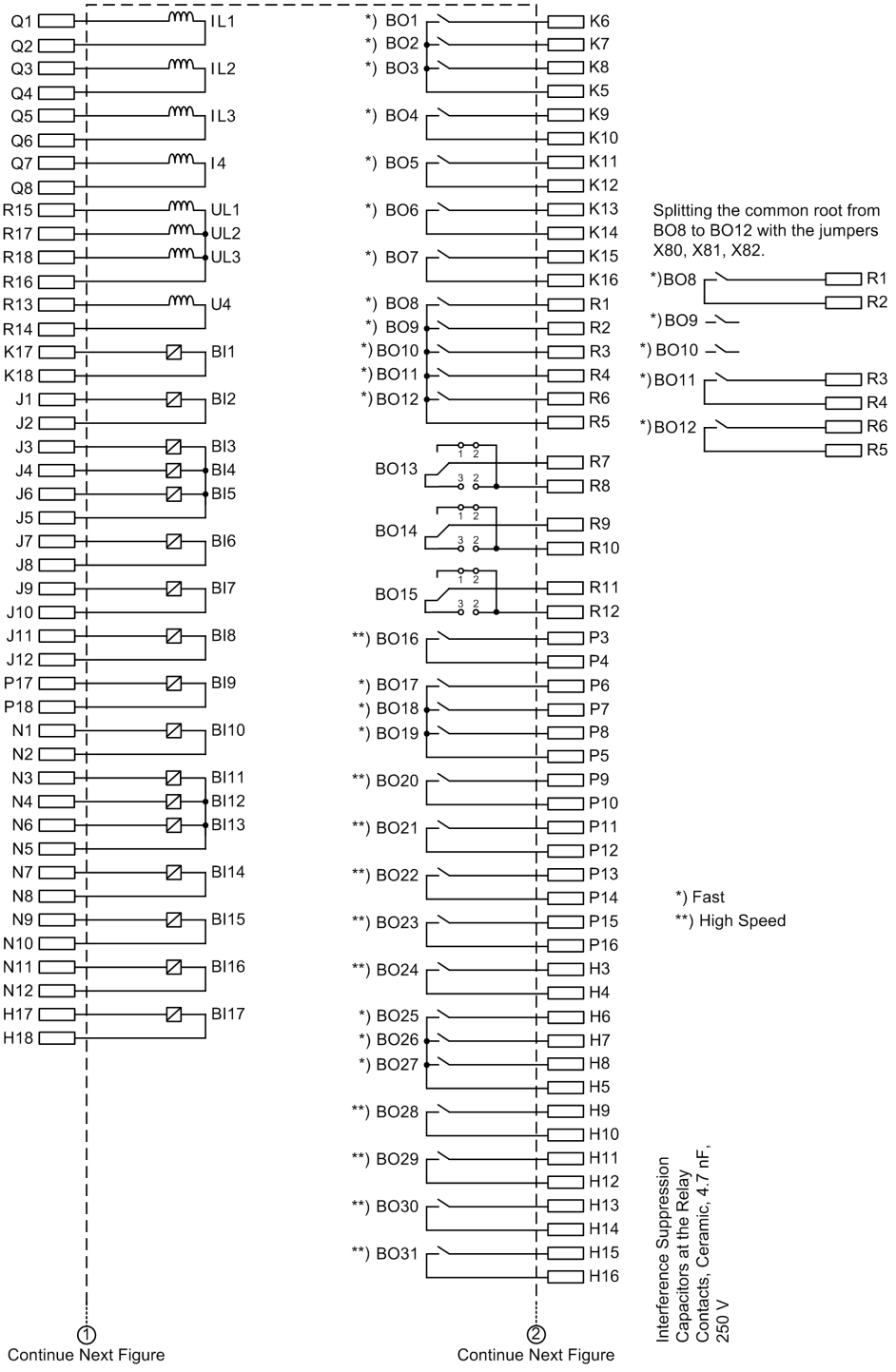
Q1
Q2
Q3
Q4
Q5
Q6
Q7
Q8
R15
R17
R18
R16
R13
R14
K17
K18
J1
J2
J3
J4
J6
J5
J7
J8
J9
J10
J11
J12
P17
P18
N1
N2
N3
N4
N6
N5
N7
N8
N9
N10
N11
N12
H17
H18
IL1
IL2
IL3
I4
UL1
UL2
UL3
U4
BI1
BI2
BI3
BI4
BI5
BI6
BI7
BI8
BI9
BI10
BI11
BI12
BI13
BI14
BI15
BI16
BI17
*) BO1
*) BO2
*) BO3
*) BO4
*) BO5
*) BO6
*) BO7
*) BO8
*) BO9
*) BO10
*) BO11
*) BO12
BO13
BO14
BO15
**) BO16
*) BO17
*) BO18
*) BO19
**) BO20
**) BO21
**) BO22
**) BO23
**) BO24
*) BO25
*) BO26
*) BO27
**) BO28
**) BO29
**) BO30
**) BO31
K6
K7
K8
K5
K9
K10
K11
K12
K13
K14
K15
K16
R1
R2
R3
R4
R6
R5
R7
R8
R9
R10
R11
R12
P3
P4
P6
P7
P8
P5
P9
P10
P11
P12
P13
P14
P15
P16
H3
H4
H6
H7
H8
H5
H9
H10
H11
H12
H13
H14
H15
H16
Splitting the common root from BO8 to BO12 with the jumpers X80, X81, X82.
*) Fast
**) High Speed
Interference Suppression Capacitors at the Relay Contacts, Ceramic, 4.7 nF, 250 V
1
Continue Next Figure
2
Continue Next Figure

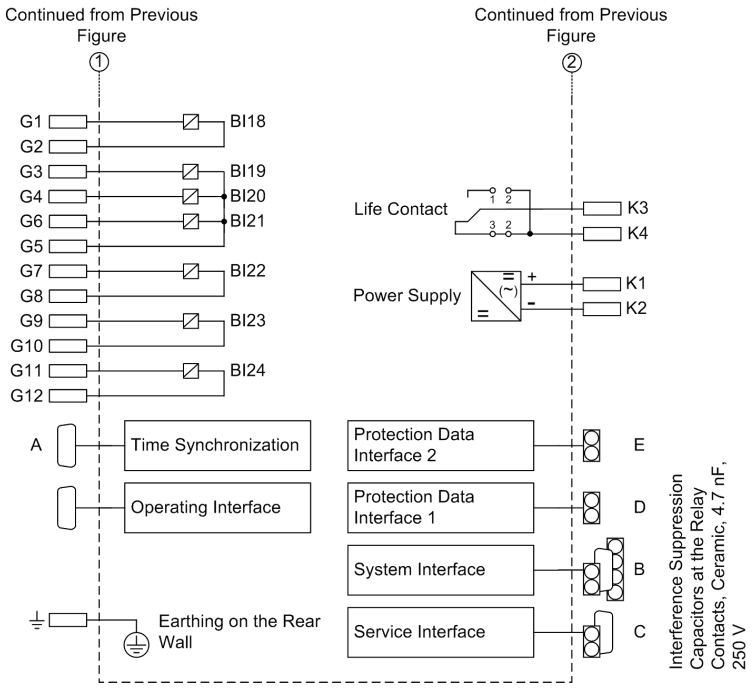

Figure A-7 General diagram 7SA522*-*W (panel flush mounting or cubicle mounting; size $^{1}/_{1}$)

A.2.2 Housing for Panel Surface Mounting

7SA522*-*E

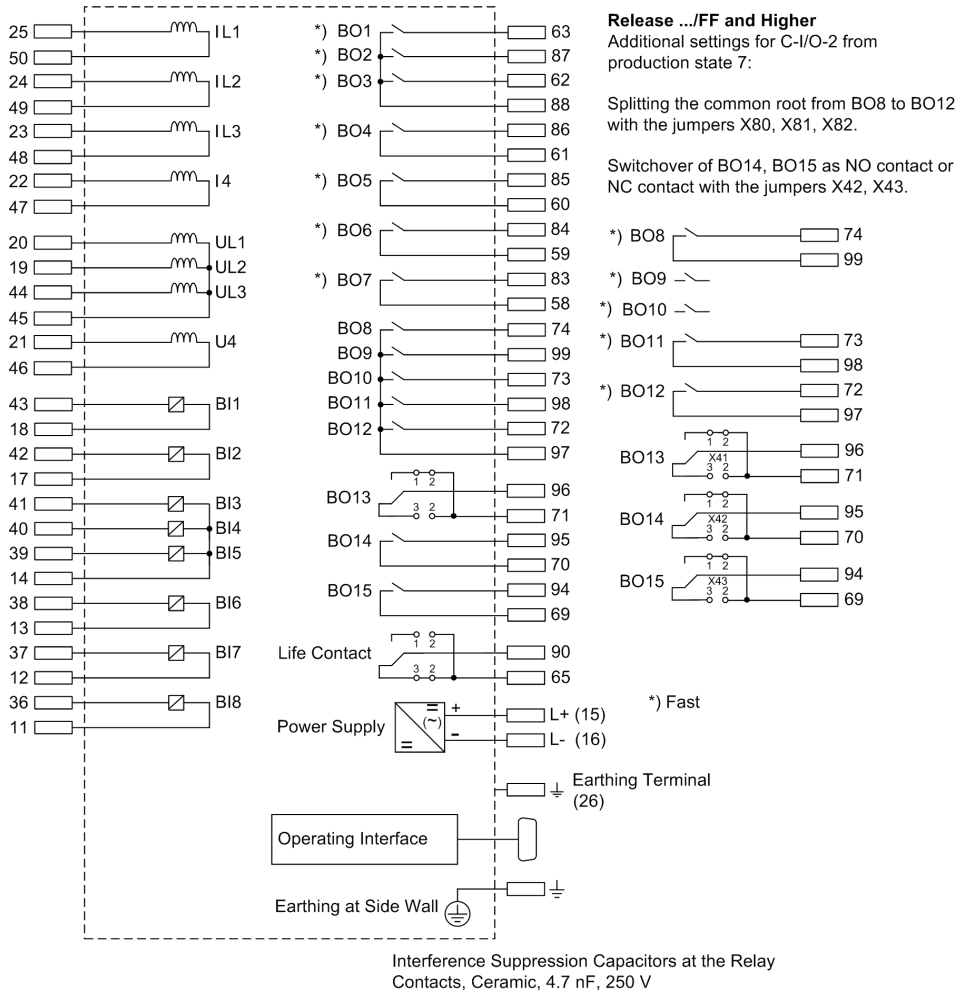

Figure A-8 General diagram 7SA522*-*E (panel surface mounting; size $^1/_2$)

7SA522*-*E (up to development state DD)

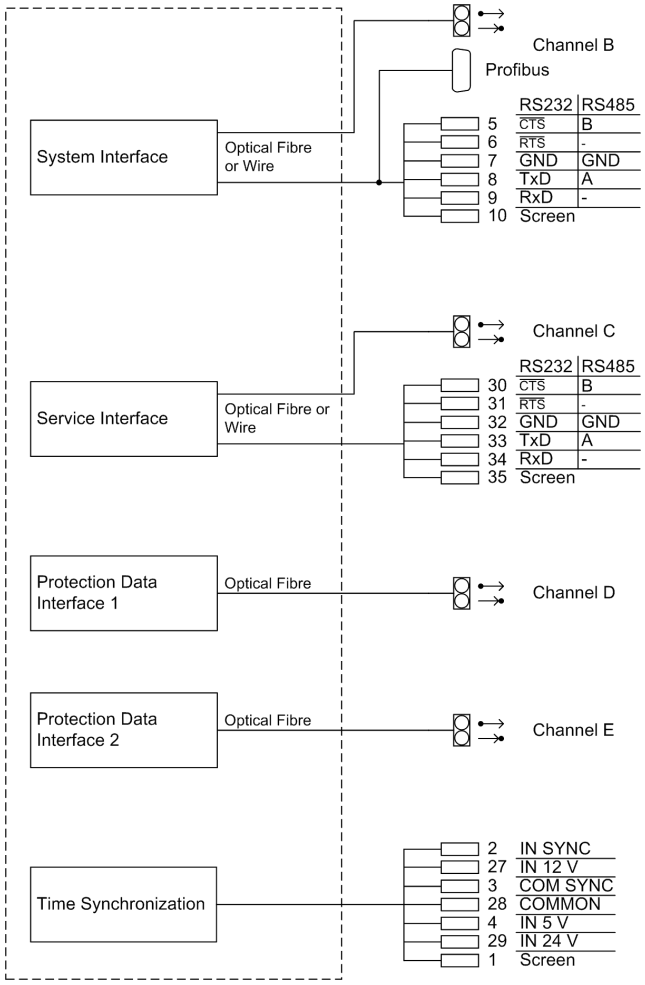

Figure A-9 General diagram 7SA522*-*E up to development state /DD (panel surface mounting; size $^1/_2$)

7SA522*-*E (beginning with development state EE)

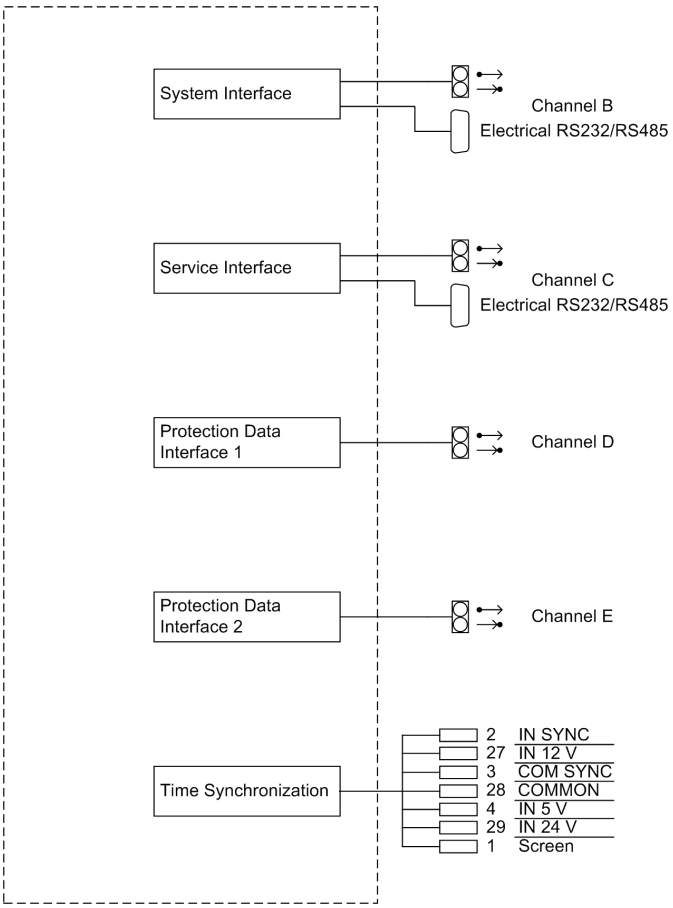

Figure A-10 General diagram 7SA522*-*E beginning with development state /EE (panel surface mounting; size $^1/_2$)

7SA522*-*G

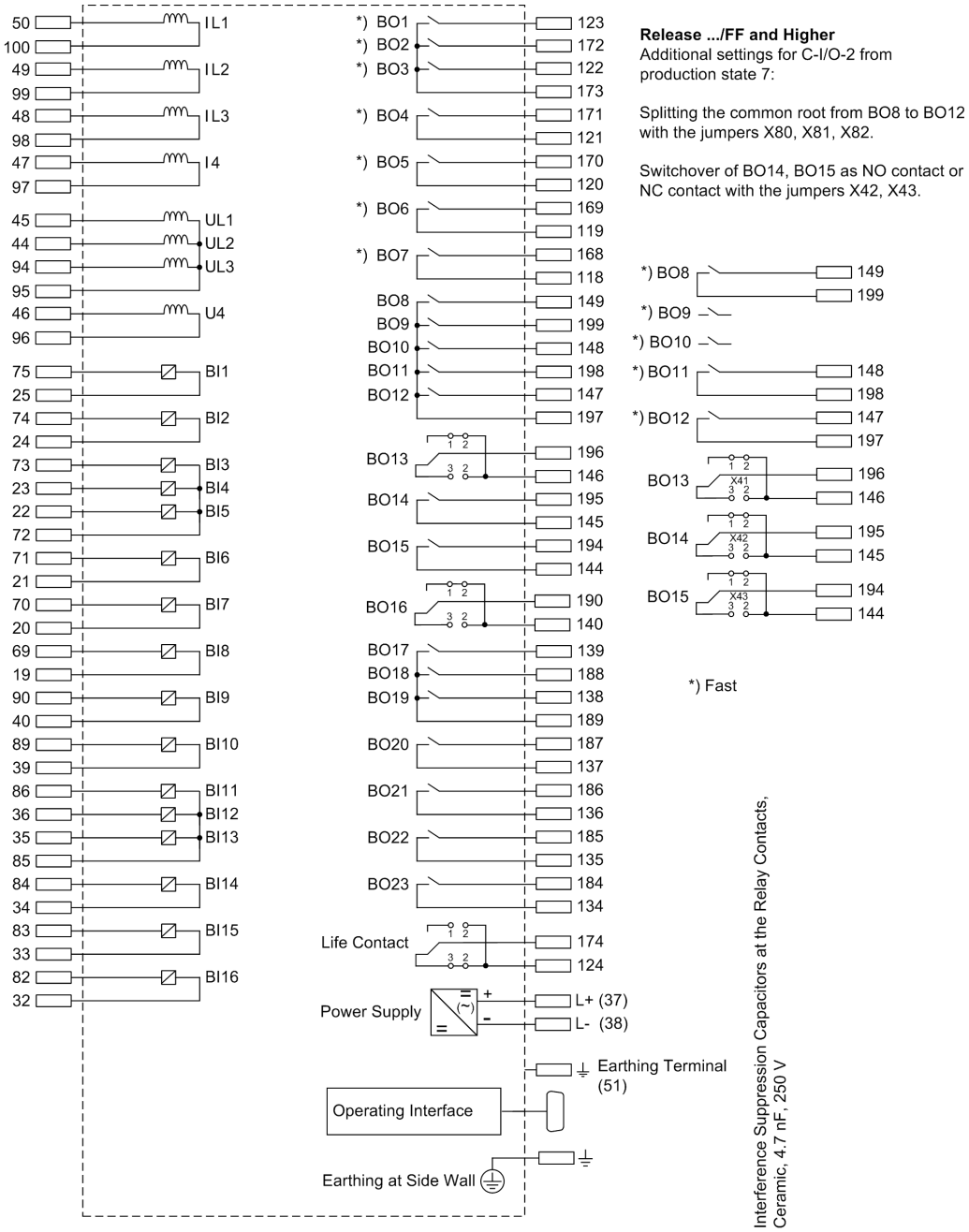

Figure A-11 General diagram 7SA522*-*G (panel surface mounting; size $^{1}/_{1}$)

7SA522*-*Q

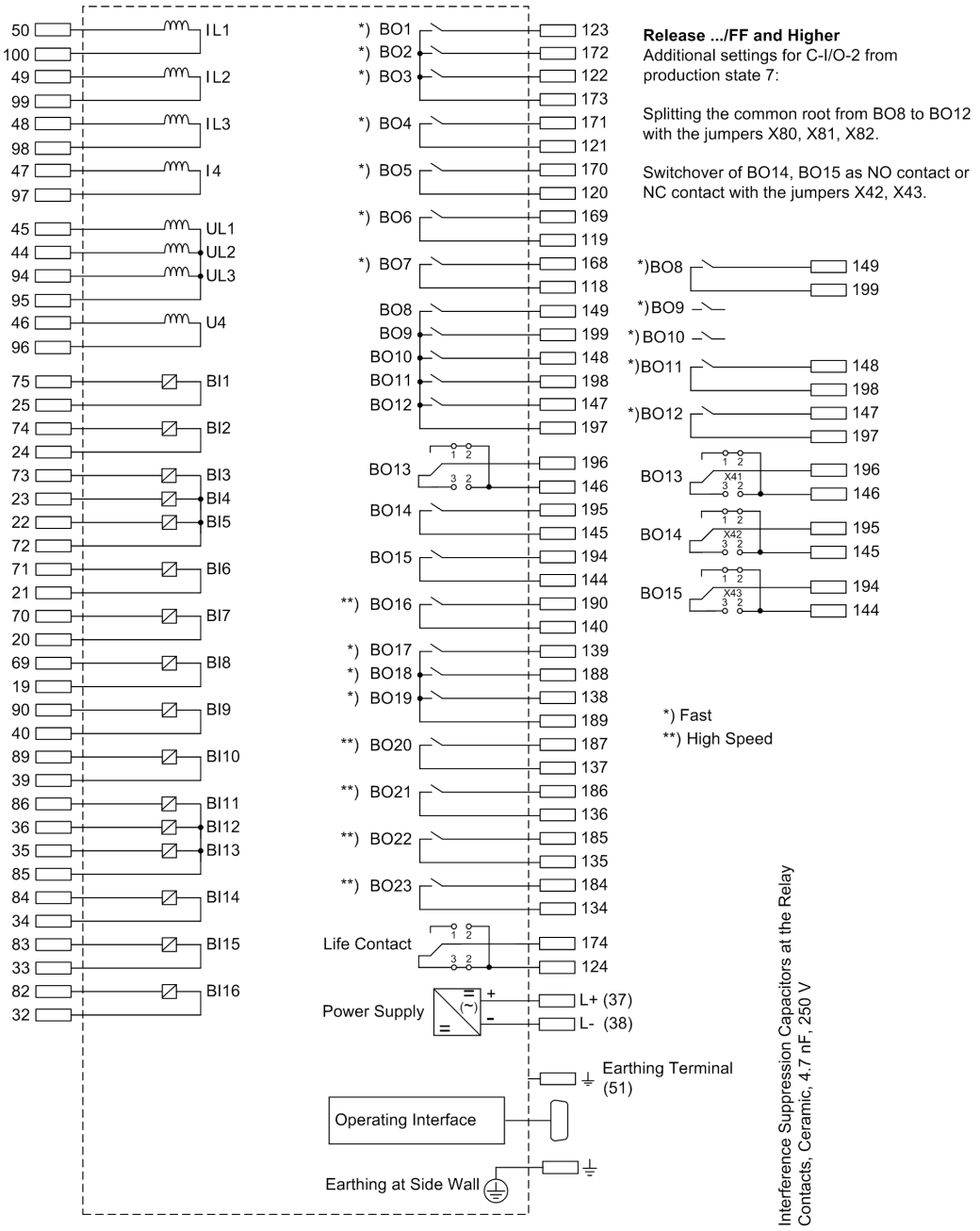

Figure A-12 General diagram 7SA522*-*Q (panel surface mounting; size $^1/_1$)

7SA522*-*H

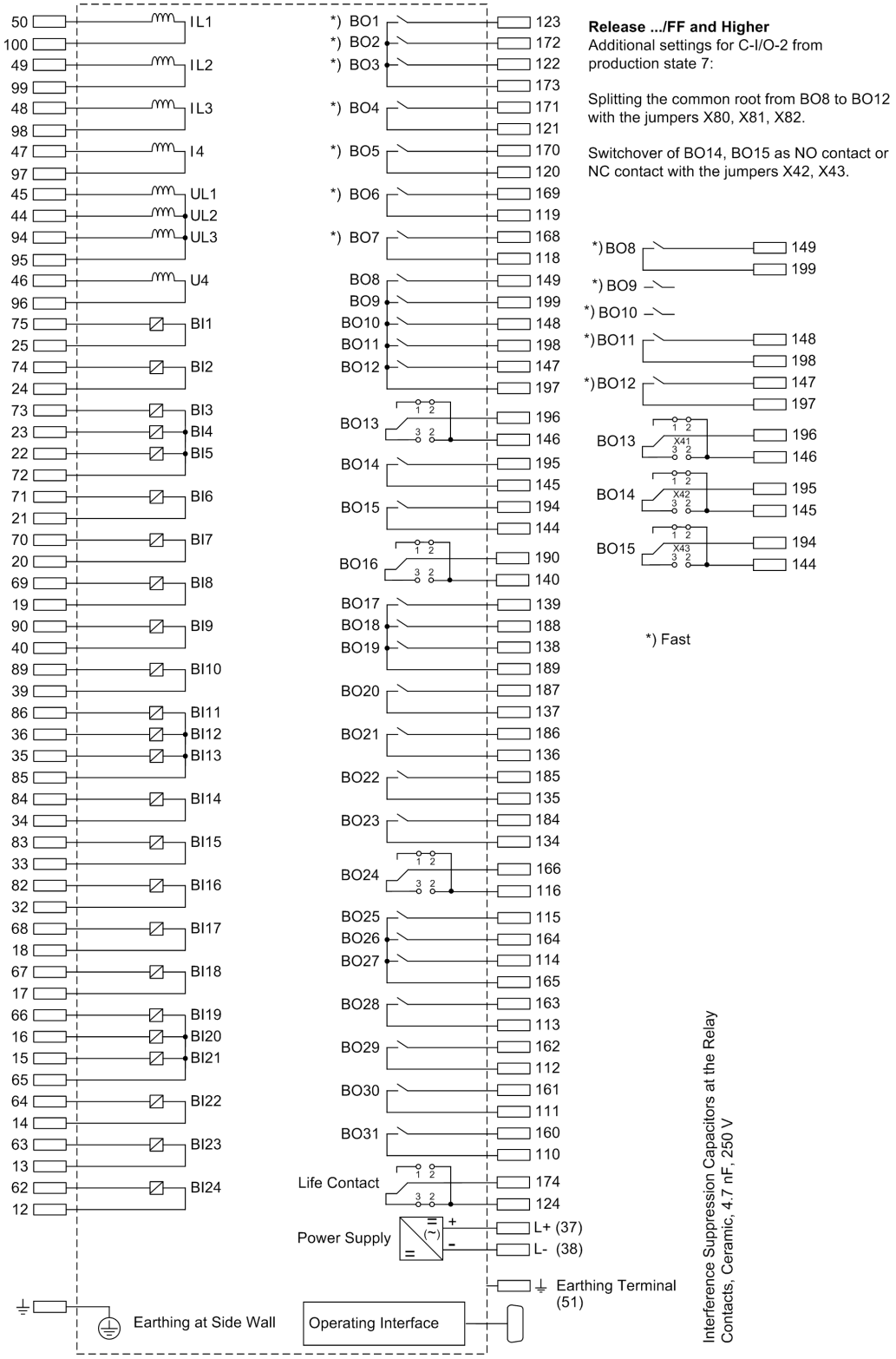

Figure A-13 General diagram 7SA522*-*H (panel surface mounting; size $^{1}/_{1}$)

7SA522*-*R

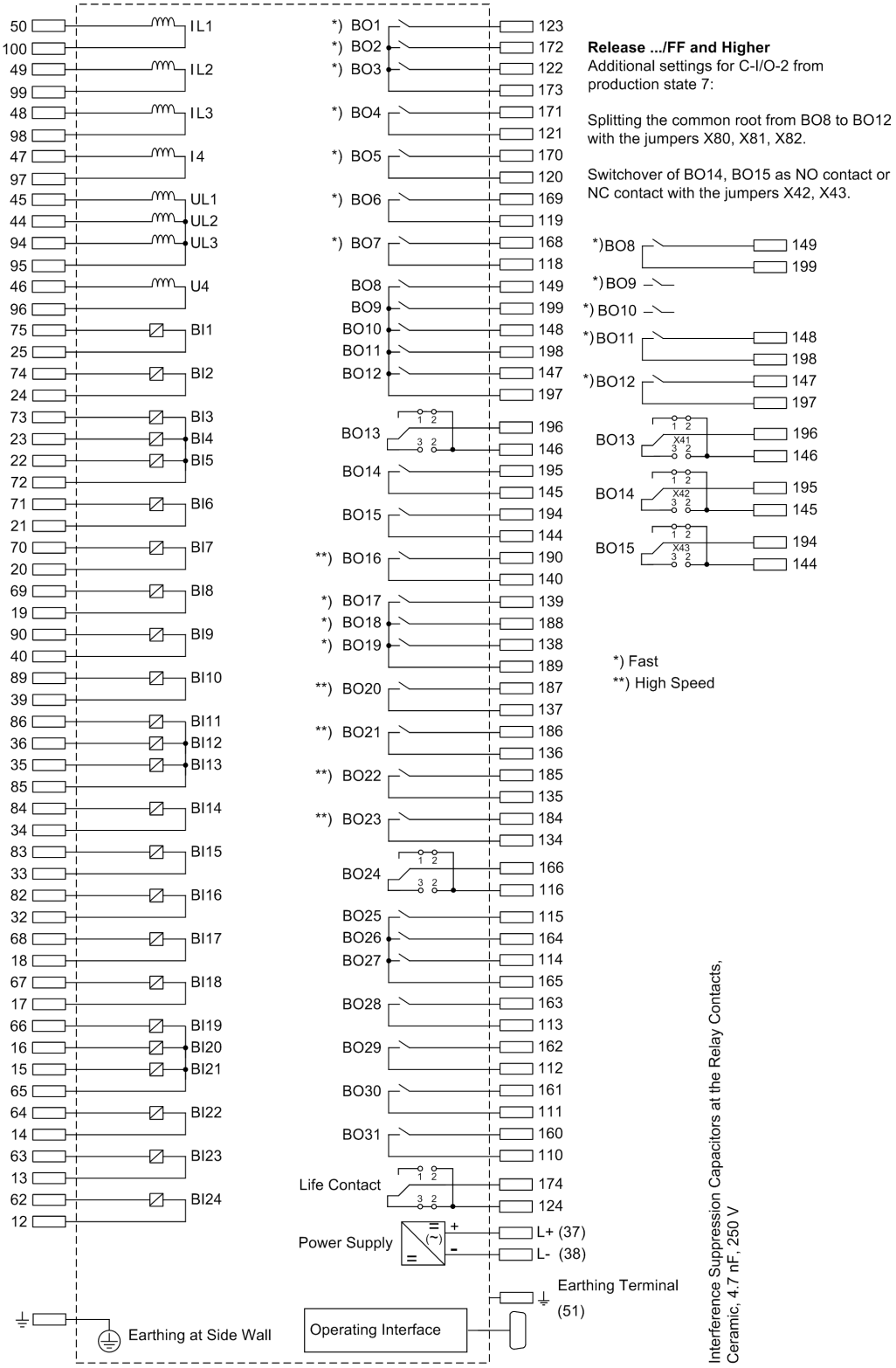

Figure A-14 General diagram 7SA522*-*R (panel surface mounting; size $^1/_1$)

7SA522*-*G/H/Q/R (up to development state /DD)

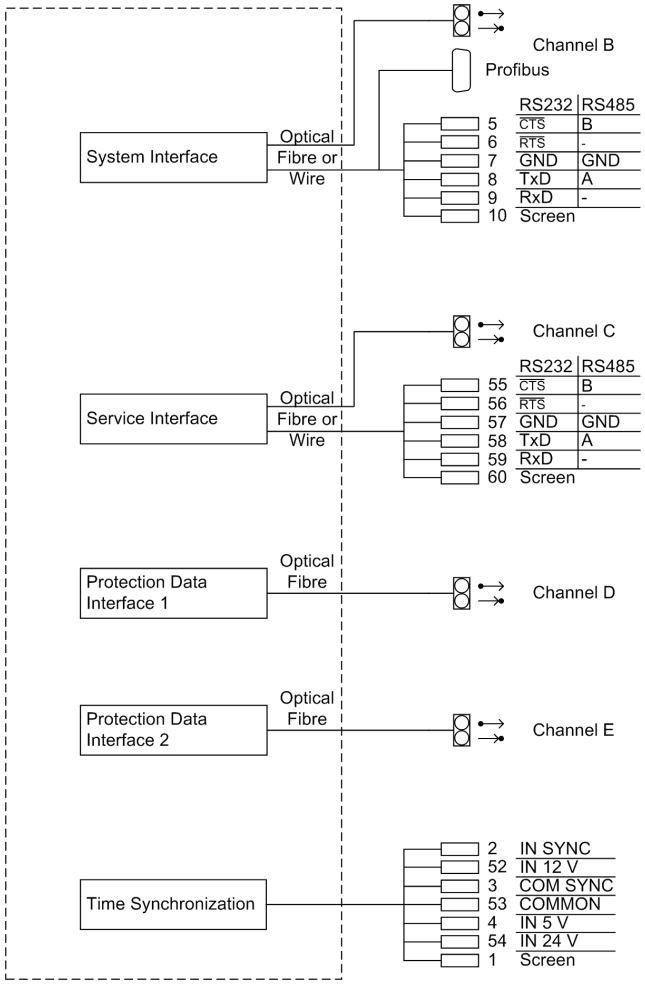

Figure A-15 General diagram 7SA522*-*G/H/Q/R up to development state /DD (panel surface mounting; size $^{1}/_{1}$)

7SA522*-*G/H/Q/R (beginning with development state /EE)

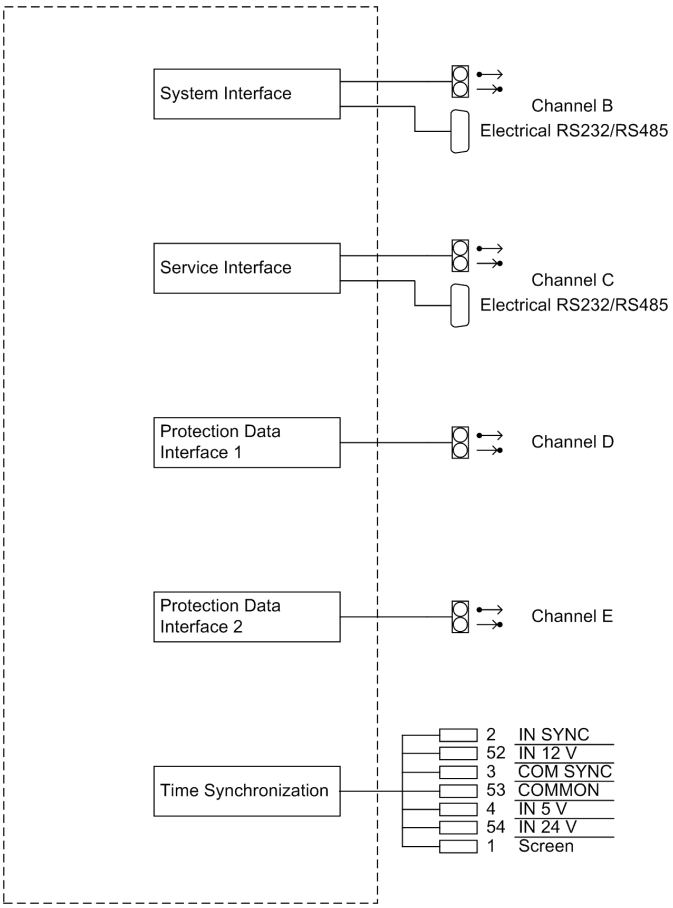

Figure A-16 General diagram 7SA522*-*G/H/Q/R beginning at development state /EE (panel surface mounting; size $^{1}/_{1}$)

A.3 Connection Examples

A.3.1 Current Transformer Examples

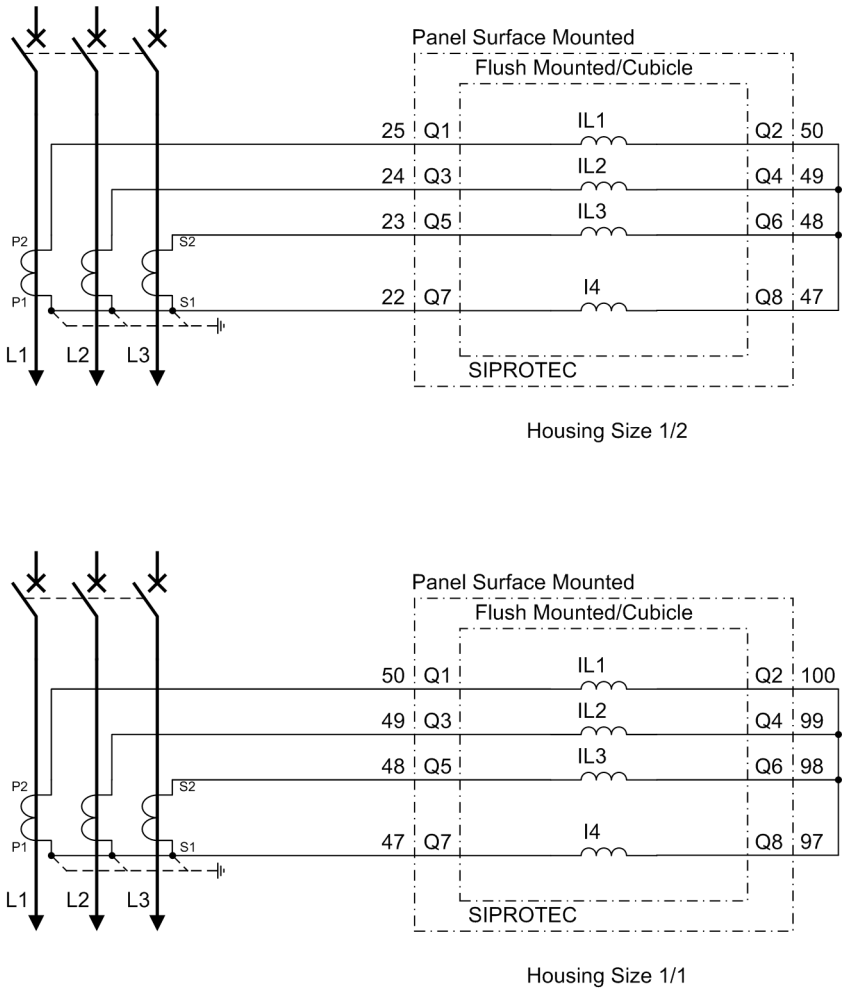

Figure A-17 Current connections to three current transformers and starpoint current (normal circuit layout)

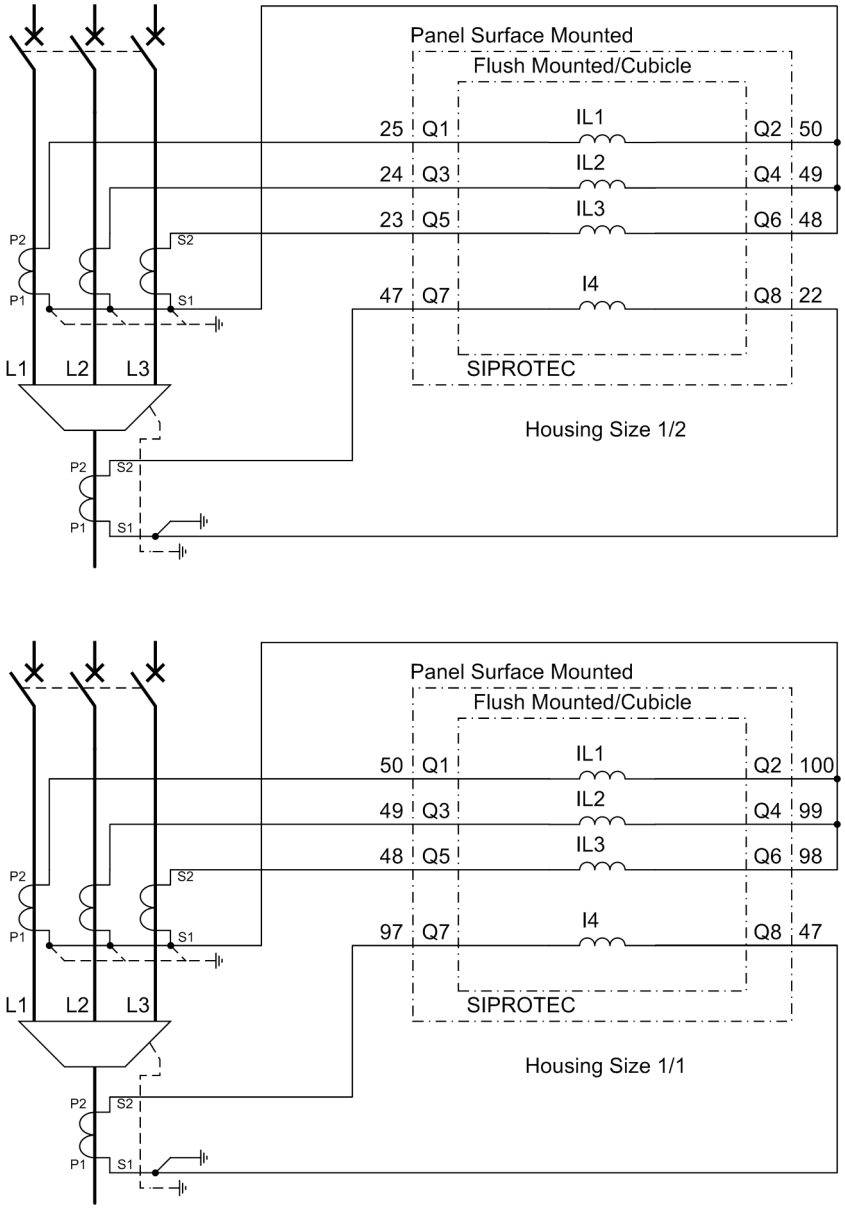

Figure A-18 Current connections to 3 current transformers with separate earth current transformer (summation current transformer) prefered for solidly or low-resistive earthed systems.

Important! The cable shield must be grounded on the cable side.

In case of an earthing of the current transformers on the busbar side, the current polarity of the device is changed via the address 0201. This also reverses the polarity of the current input IE or IEE. Therefore the connections of S1 and S2 must be exchanged at Q8 and Q7 when using a toroidal current transformer.

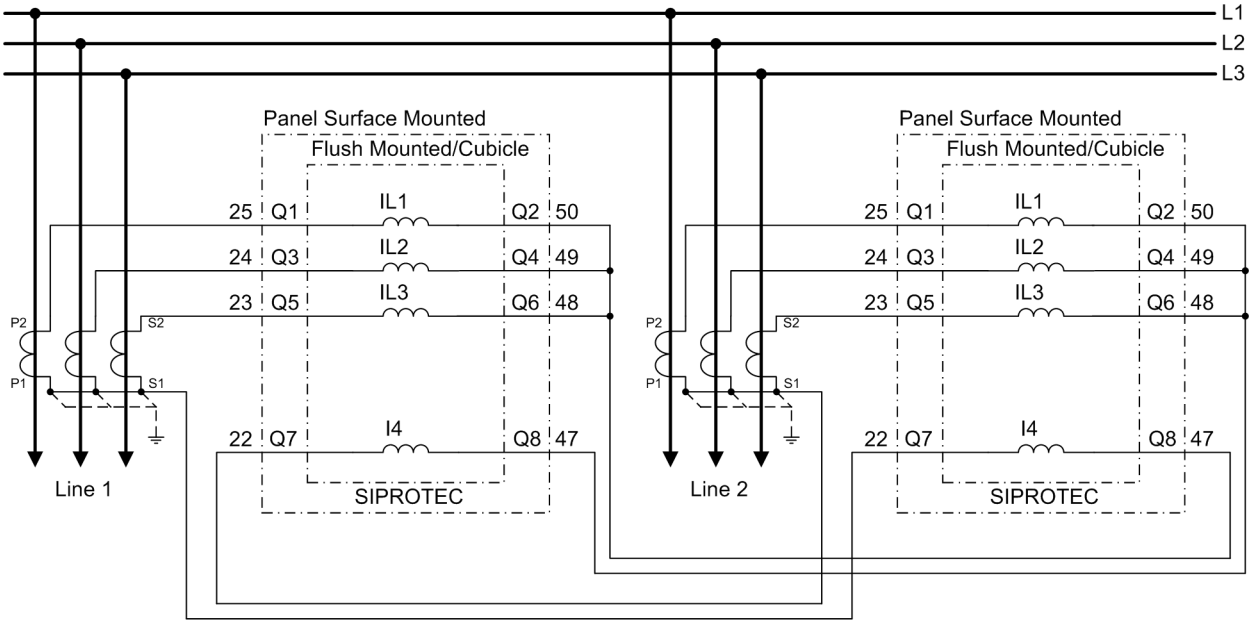

Housing Size 1/2

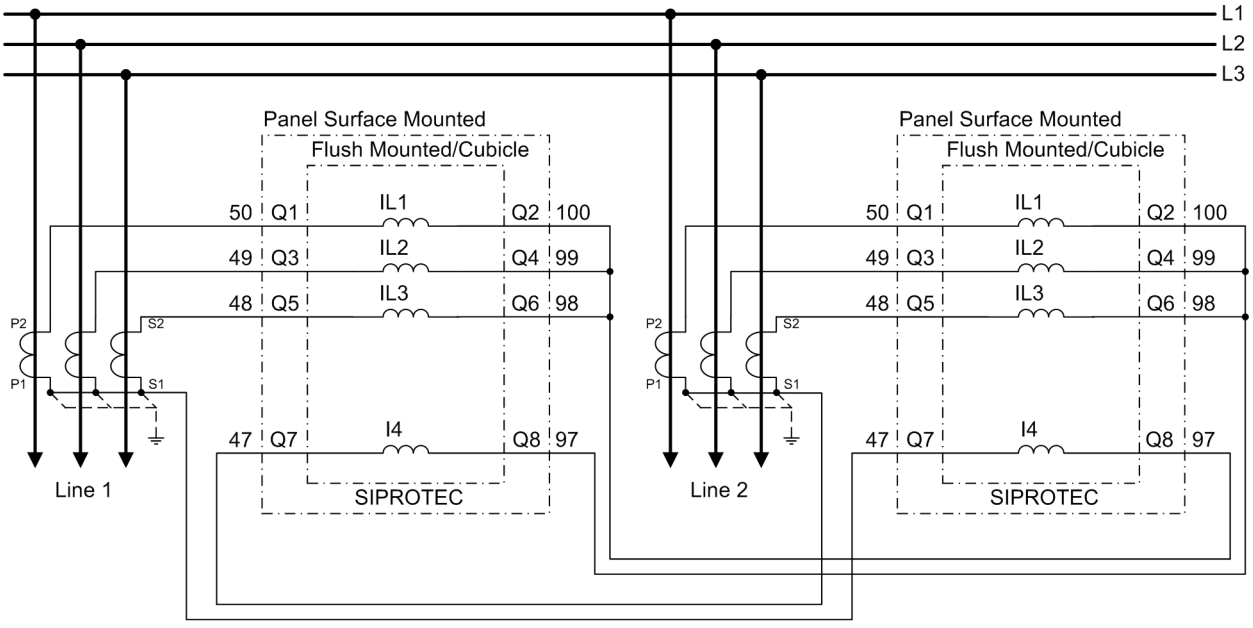

Housing Size 1/1

Figure A-19 Current connections to three current transformers and earth current from the star-point connection of a parallel line (for parallel line compensation)

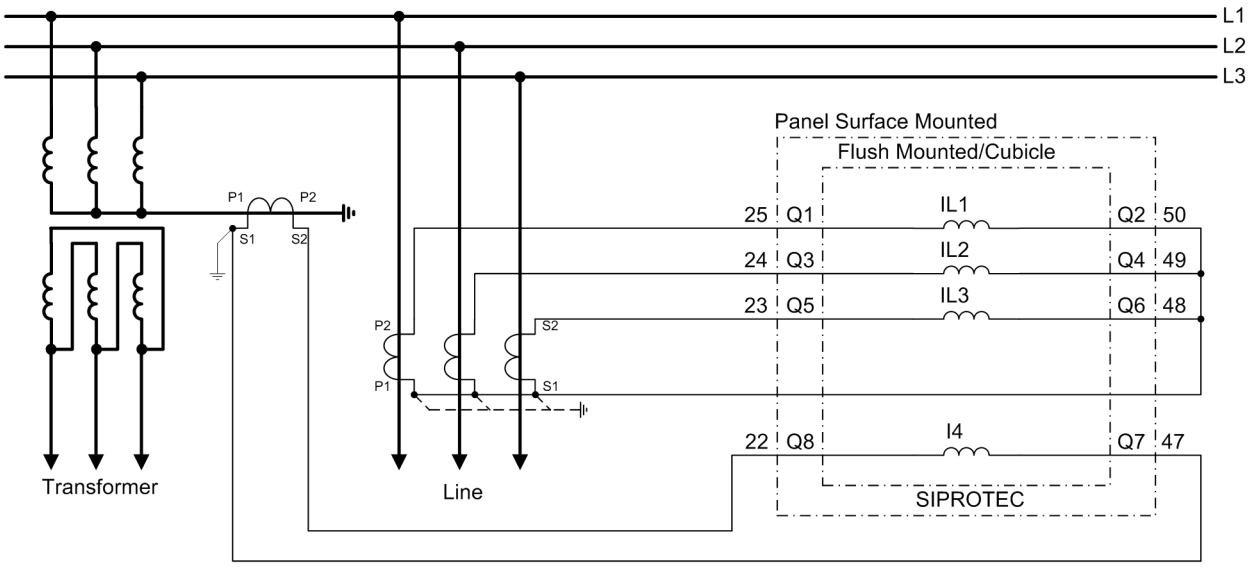

Housing Size 1/2

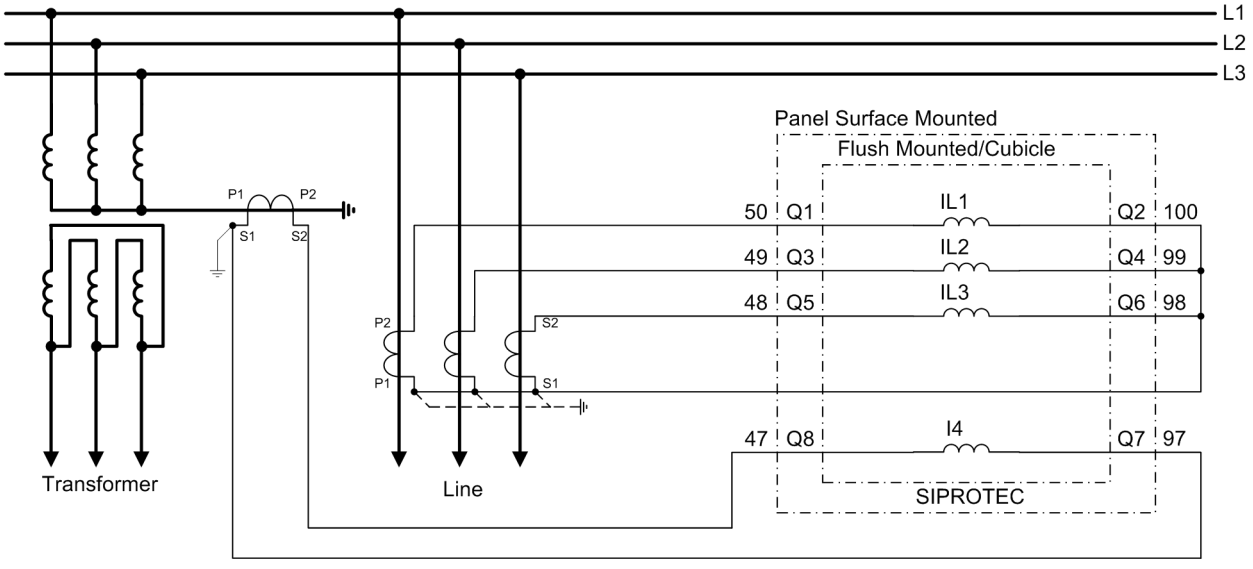

Housing Size 1/1

Figure A-20 Current connections to three current transformers and earth current from the star-point current of an earthed power transformer (for directional earth fault protection)

A.3.2 Voltage Transformer Examples

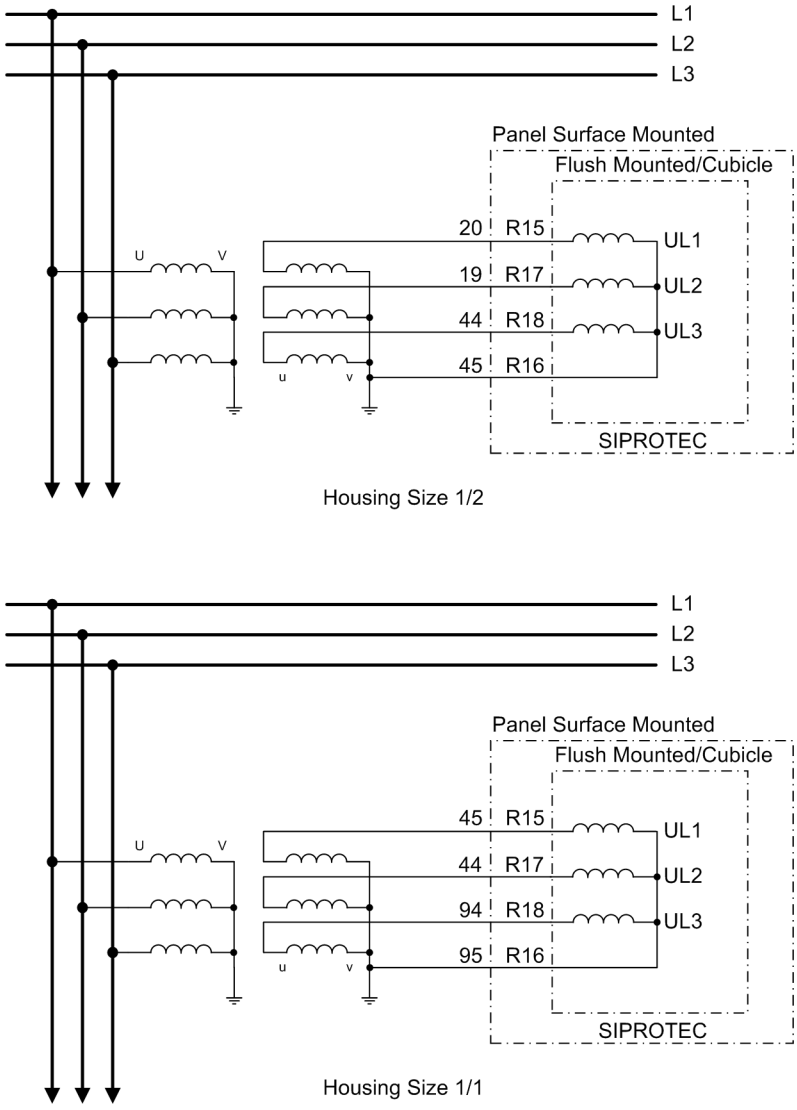

Figure A-21 Voltage connections to three wye-connected voltage transformers (normal circuit layout)

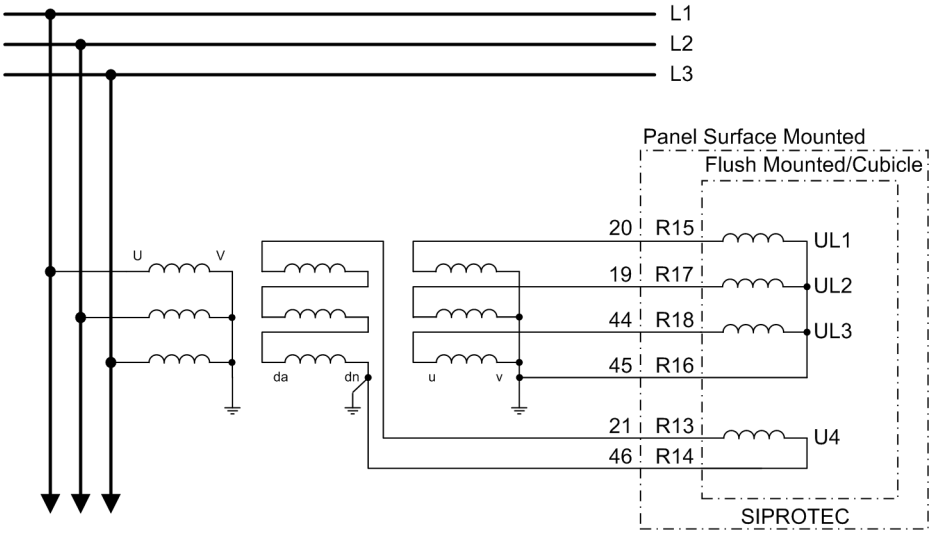

Housing Size 1/2

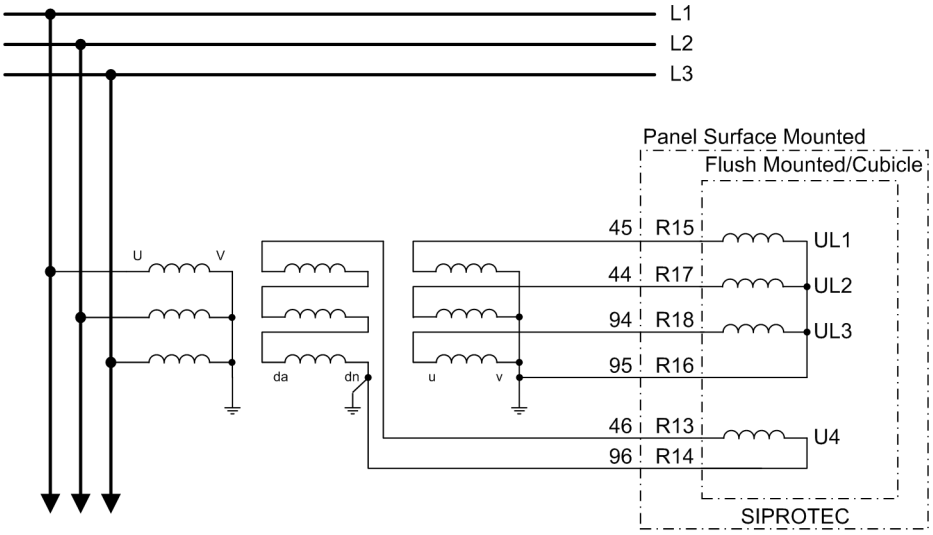

Housing Size 1/1

Figure A-22 Voltage connections to three wye-connected voltage transformers with additional open-delta windings (e–n–winding)

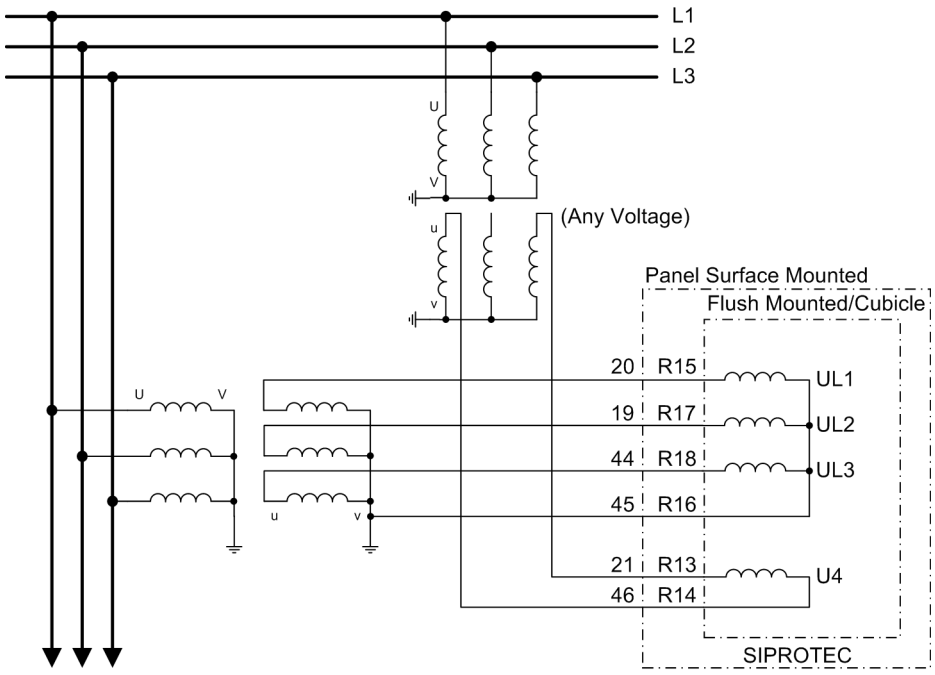

Housing Size 1/2

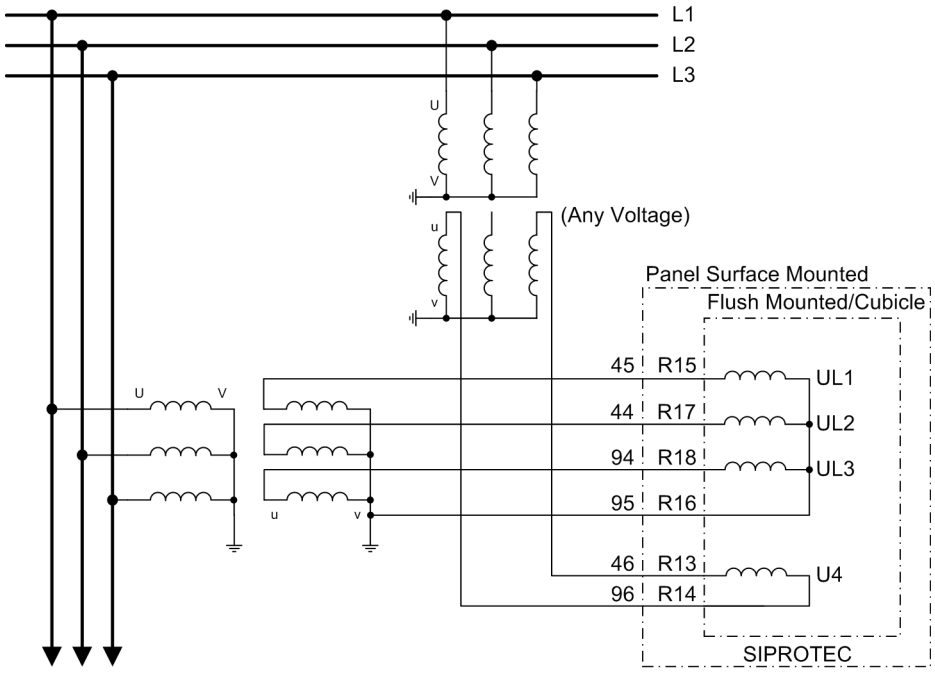

Housing Size 1/1

Figure A-23 Voltage connections to three wye-connected voltage transformers and additionally to a busbar voltage (for overvoltage protection or synchronism check)

A.4 Default Settings

When the device leaves the factory, a large number of LED indications, binary inputs and outputs as well as function keys are already preset. They are summarised in the following table.

A.4.1 LEDs

Table A-1 LED Indication Presettings

LEDs	Allocated Function	Function No.	Description
LED1	Relay PICKUP L1	503	Relay PICKUP Phase L1
LED2	Relay PICKUP L2	504	Relay PICKUP Phase L2
LED3	Relay PICKUP L3	505	Relay PICKUP Phase L3
LED4	Relay PICKUP E	506	Relay PICKUP Earth
LED5	EF reverse	1359	E/F picked up REVERSE
	Dis. reverse	3720	Distance Pickup REVERSE
LED6	Relay TRIP	511	Relay GENERAL TRIP command[1)]
	Relay TRIP 3ph.	515	Relay TRIP command Phases L123[2)]
LED7	Relay TRIP 1pL1	512	Relay TRIP command - Only Phase L1[2)]
	Relay TRIP 1pL2	513	Relay TRIP command - Only Phase L2[2)]
	Relay TRIP 1pL3	514	Relay TRIP command - Only Phase L3[2)]
LED8	Dis.TripZ1/1p	3811	Distance TRIP single-phase Z1[2)]
	DisTRIP3p. Z1sf	3823	DisTRIP 3phase in Z1 with single-ph Flt.
	DisTRIP3p. Z1mf	3824	DisTRIP 3phase in Z1 with multi-ph Flt.
LED9	Dis.TripZ1B1p	3813	Distance TRIP single-phase Z1B[2)]
	DisTRIP3p.Z1Bsf	3825	DisTRIP 3phase in Z1B with single-ph Flt
	DisTRIP3p Z1Bmf	3826	DisTRIP 3phase in Z1B with multi-ph Flt.
LED10	Dis.TripZ2/1p	3816	Distance TRIP single-phase Z2[2)]
	Dis.TripZ2/3p	3817	Distance TRIP 3phase in Z2
LED11	Dis.TripZ3/T3	3818	Distance TRIP 3phase in Z3
	Dis.TRIP 3p. Z4	3821	Distance TRIP 3phase in Z4
	Dis.TRIP 3p. Z5	3822	Distance TRIP 3phase in Z5
LED12	AR not ready	2784	AR: Auto-reclose is not ready[3)]
LED13	Emer. mode	2054	Emergency mode
LED14	Alarm Sum Event	160	Alarm Summary Event

1) only devices with three-pole tripping only
2) only devices with single-pole and three-pole tripping
3) only devices with automatic reclosure function

A.4.2 Binary Input

Table A-2 Binary input presettings for all devices and ordering variants

Binary Input	Allocated Function	Function No.	Description
BI1	>Reset LED	5	>Reset LED
BI2	>Manual Close	356	>Manual close signal
BI3	>FAIL:Feeder VT >I-STUB ENABLE	361 7131	>Failure: Feeder VT (MCB tripped) >Enable I-STUB-Bus function
BI4	>DisTel Rec.Ch1	4006	>Dis.Tele. Carrier RECEPTION Channel 1
BI5	>1p Trip Perm	381	>Single-phase trip permitted from ext.AR[1)]

[1)] only devices with single-pole and three-pole tripping

A.4.3 Binary Output

Table A-3 Output relay presettings for all devices and ordering variants

Binary Output	Allocated Function	Function No.	Description
BO1	Relay PICKUP	501	Relay PICKUP
BO2	Dis.T.SEND	4056	Dis. Telep. Carrier SEND signal
BO3	no presetting	-	-
BO4	Relay TRIP	511	Relay GENERAL TRIP command[1)]
	Relay TRIP 1pL1	512	Relay TRIP command - Only Phase L1[2)]
	Relay TRIP 3ph.	515	Relay TRIP command Phases L123[2)]
BO5	Relay TRIP	511	Relay GENERAL TRIP command[1)]
	Relay TRIP 1pL2	513	Relay TRIP command - Only Phase L2[2)]
	Relay TRIP 3ph.	515	Relay TRIP command Phases L123[2)]
BO6	Relay TRIP 1pL3	514	Relay TRIP command - Only Phase L3[2)]
	Relay TRIP 3ph.	515	Relay TRIP command Phases L123[2)]
BO7	AR CLOSE Cmd.	2851	AR: Close command[3)]
BO8	DisTRIP3p. Z1sf	3823	DisTRIP 3phase in Z1 with single-ph Flt.[1)]
	DisTRIP3p.Z1Bsf	3825	DisTRIP 3phase in Z1B with single-ph Flt[1)]
	Dis.TripZ1/1p	3811	Distance TRIP single-phase Z1[2)]
	Dis.TripZ1B1p	3813	Distance TRIP single-phase Z1B[2)]
BO9	DisTRIP3p. Z1sf	3823	DisTRIP 3phase in Z1 with single-ph Flt.[2)]
	DisTRIP3p. Z1mf	3824	DisTRIP 3phase in Z1 with multi-ph Flt.[2)]
	DisTRIP3p.Z1Bsf	3825	DisTRIP 3phase in Z1B with single-ph Flt[2)]
	DisTRIP3p Z1Bmf	3826	DisTRIP 3phase in Z1B with multi-ph Flt.[2)]
BO10	DisTRIP3p. Z1sf	3823	DisTRIP 3phase in Z1 with single-ph Flt.[1)]
	DisTRIP3p.Z1Bsf	3825	DisTRIP 3phase in Z1B with single-ph Flt[1)]
BO11	DisTRIP3p. Z1mf	3824	DisTRIP 3phase in Z1 with multi-ph Flt.[1)]
	DisTRIP3p Z1Bmf	3826	DisTRIP 3phase in Z1B with multi-ph Flt.[1)]
BO12	Alarm Sum Event	160	Alarm Summary Event
BO13	Relay TRIP	511	Relay GENERAL TRIP command[1)]
	Relay TRIP 1pL1	512	Relay TRIP command - Only Phase L1[2)]
	Relay TRIP 3ph.	515	Relay TRIP command Phases L123[2)]
BO14	Relay TRIP	511	Relay GENERAL TRIP command[1)]
	Relay TRIP 1pL2	513	Relay TRIP command - Only Phase L2[2)]
	Relay TRIP 3ph.	515	Relay TRIP command Phases L123[2)]
BO15	Relay TRIP 1pL3	514	Relay TRIP command - Only Phase L3[2)]
	Relay TRIP 3ph.	515	Relay TRIP command Phases L123[2)]

1) only devices with three-pole tripping
2) only devices with single-pole and three-pole tripping
3) only devices with automatic reclosure function

A.4.4 Function Keys

Table A-4 Applies to all devices and ordered variants

Function Keys	Allocated Function
F1	Display of operational indications
F2	Display of the primary operational measured values
F3	An overview of the last eight network faults
F4	Not pre-assigned

A.4.5 Default Display

4-line Display

Table A-5 This selection is available as start page which may be configured.

Page 1	1▮ 1000A 12▮ 400kV 2▮ 999A 23▮ 400kV 3▮ 1000A 31▮ 400kV E▮ 0A U0▮ 0kV
Page 2	% IL ULE ULL L1▮ 78.4 99.6 99.5 L2▮ 78.1 99.4 99.3 L3▮ 78.9 99.8 99.7
Page 3	S: 0.0MVA U: 0kV P: 0.0MW I: 0A Q: 0.0MVAR **f**: --- PF: ---
Page 4	L1▮ 78.4A MAX 81.2A L2▮ 78.1A MAX 81.0A L3▮ 78.9A MAX 81.9A E ▮ 0.0A
Page 5	L1▮ 78.4A L2▮ 78.1A L3▮ 78.9A E ▮ 0.0A

Spontaneous Fault Indication of the 4-Line Display

The spontaneous annunciations on devices with 4-line display serve to display the most important data about a fault. They appear automatically in the display after pick-up of the device, in the sequence shown below.

Relay PICKUP:	A message indicating the protective function that picked up first
PU Time=:	Elapsed time from pick-up until drop-off
Trip time=:	Elapsed time from pick-up until the first trip command of a protection function
Fault locator	Fault distance d in km or miles

A.4.6 Pre-defined CFC Charts

Some CFC charts are already supplied with the SIPROTEC 4 device. Depending on the variant the following charts may be implemented:

Device and system logic

Some of the event-controlled logical allocations are created with blocks of the slow logic (**PLC1_BEARB** = slow PLC processing). This way, the binary input „Data Stop“ is modified from a single point indication (SP) into an internal single point indication (IntSP) by means of a negator block.

With double point indication „EarthSwit.“ = CLOSE an indication saying „fdrEARTHED“ ON and with „Earth-Swit.“ = OPEN or INT the indication „fdrEARTHED“ OFF is generated.

From the output indication „definite TRIP“ the internal indication „Brk OPENED“ is generated. As indication „definite TRIP“ only queued for 500 ms, also indication „Device Brk OPENED“ is reset after this time period.

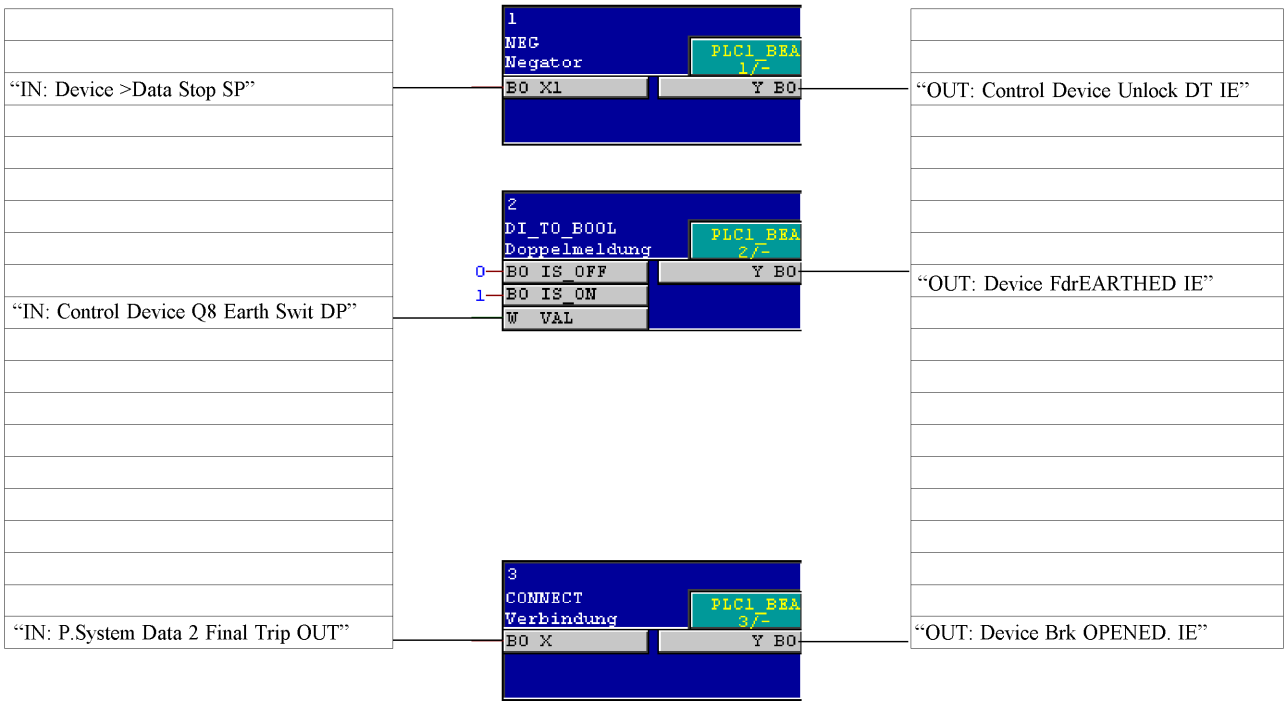

Figure A-24 Allocation of input and output with blocks of priority class System Logic

A.5 Protocol-dependent Functions

Protocol → / Function ↓	IEC 60870-5-103	IEC 61850 Ethernet (EN-100)	Profibus FMS	PROFIBUS DP	DNP3.0	Additional Service Interface (optional)
Operational measured values	Yes	Yes	Yes	Yes	Yes	Yes
Metered values	Yes	Yes	Yes	Yes	Yes	Yes
Fault recording	Yes	Yes	Yes	No. Only via additional service interface	No. Only via additional service interface	Yes
Remote protection setting	No. Only via additional service interface	Yes with DIGSI via Ethernet	Yes with DIGSI via PROFIBUS	No. Only via additional service interface	No. Only via additional service interface	Yes
User-defined annunciations and switching objects	Yes	Yes	Yes	Predefined „User-defined Alarms“ in CFC	Predefined „User-defined Alarms“ in CFC	Yes
Time synchronisation	Via protocol; DCF77/IRIG B; Interface; Binary input	Via Protocol (NTP); DCF77/IRIG B; Interface; Binary input	Via protocol; DCF77/IRIG B; Interface; Binary input	Via DCF77/IRIG B; Interface; Binary input	Via Protocol; DCF77/IRIG B; Interface; Binary input	-
Messages with time stamp	Yes	Yes	Yes	Yes	Yes	Yes
Commissioning aids						
Measured value indication blocking	Yes	Yes	Yes	No	No	Yes
Generation of test indications	Yes	Yes	Yes	No	No	Yes
Physical mode	Asynchronous	Synchronous	Asynchronous	Asynchronous	Asynchronous	-
Transmission mode	Cyclical/Event	Cyclical/Event	Cyclical/Event	Cyclical	Cyclical/Event	-
Baud rate	4800 to 38400	up to 100 MBaud	up to 1.5 MBaud	up to 1.5 MBaud	2400 to 19200	2400 to 115200
Type	RS 232 RS 485 fibre optic cable	Ethernet TP	RS485 fibre optic cable Double ring	RS485 fibre optic cable Double ring	RS485 fibre optic cable	RS232, RS485

A.6 Functional Scope

Addr.	Parameter	Setting Options	Default Setting	Comments
103	Grp Chge OPTION	Disabled Enabled	Disabled	Setting Group Change Option
110	Trip mode	3pole only 1-/3pole	3pole only	Trip mode
112	Phase Distance	Quadrilateral MHO Disabled	Quadrilateral	Phase Distance
113	Earth Distance	Quadrilateral MHO Disabled	Quadrilateral	Earth Distance
119	Iph>(Z1)	Disabled Enabled	Disabled	Additional Threshold Iph>(Z1)
120	Power Swing	Disabled Enabled	Disabled	Power Swing detection
121	Teleprot. Dist.	PUTT (Z1B) POTT UNBLOCKING BLOCKING SIGNALv.ProtInt Disabled	Disabled	Teleprotection for Distance prot.
122	DTT Direct Trip	Disabled Enabled	Disabled	DTT Direct Transfer Trip
124	SOTF Overcurr.	Disabled Enabled	Disabled	Instantaneous HighSpeed SOTF Overcurrent
125	Weak Infeed	Disabled Enabled Logic no. 2	Disabled	Weak Infeed (Trip and/or Echo)
126	Back-Up O/C	Disabled TOC IEC TOC ANSI TOC IEC /w 3ST	TOC IEC	Backup overcurrent
131	Earth Fault O/C	Disabled TOC IEC TOC ANSI TOC Logarithm. Definite Time U0 inverse Sr inverse	Disabled	Earth fault overcurrent
132	Teleprot. E/F	Dir.Comp.Pickup SIGNALv.ProtInt UNBLOCKING BLOCKING Disabled	Disabled	Teleprotection for Earth fault over-curr.

Addr.	Parameter	Setting Options	Default Setting	Comments
133	Auto Reclose	1 AR-cycle 2 AR-cycles 3 AR-cycles 4 AR-cycles 5 AR-cycles 6 AR-cycles 7 AR-cycles 8 AR-cycles ADT Disabled	Disabled	Auto-Reclose Function
134	AR control mode	Pickup w/ Tact Pickup w/o Tact Trip w/ Tact Trip w/o Tact	Trip w/ Tact	Auto-Reclose control mode
135	Synchro-Check	Disabled Enabled	Disabled	Synchronism and Voltage Check
136	FREQUENCY Prot.	Disabled Enabled	Disabled	Over / Underfrequency Protection
137	U/O VOLTAGE	Disabled Enabled Enabl. w. comp.	Disabled	Under / Overvoltage Protection
138	Fault Locator	Enabled Disabled with BCD-output	Enabled	Fault Locator
139	BREAKER FAILURE	Disabled Enabled enabled w/ 3I0>	Disabled	Breaker Failure Protection
140	Trip Cir. Sup.	Disabled 1 trip circuit 2 trip circuits 3 trip circuits	Disabled	Trip Circuit Supervision
145	P. INTERFACE 1	Enabled Disabled IEEE C37.94	Enabled	Protection Interface 1 (Port D)
146	P. INTERFACE 2	Disabled Enabled IEEE C37.94	Disabled	Protection Interface 2 (Port E)
147	NUMBER OF RELAY	2 relays 3 relays	2 relays	Number of relays

A.7 Settings

Addresses which have an appended "A" can only be changed with DIGSI, under Additional Settings.

The table indicates region-specific presettings. Column C (configuration) indicates the corresponding secondary nominal current of the current transformer.

Addr.	Parameter	Function	C	Setting Options	Default Setting	Comments
201	CT Starpoint	P.System Data 1		towards Line towards Busbar	towards Line	CT Starpoint
203	Unom PRIMARY	P.System Data 1		1.0 .. 1200.0 kV	400.0 kV	Rated Primary Voltage
204	Unom SECONDARY	P.System Data 1		80 .. 125 V	100 V	Rated Secondary Voltage (Ph-Ph)
205	CT PRIMARY	P.System Data 1		10 .. 5000 A	1000 A	CT Rated Primary Current
206	CT SECONDARY	P.System Data 1		1A 5A	1A	CT Rated Secondary Current
207	SystemStarpoint	P.System Data 1		Solid Earthed Peterson-Coil Isolated	Solid Earthed	System Starpoint is
210	U4 transformer	P.System Data 1		Not connected Udelta transf. Usy2 transf. Ux transformer	Not connected	U4 voltage transformer is
211	Uph / Udelta	P.System Data 1		0.10 .. 9.99	1.73	Matching ratio Phase-VT To Open-Delta-VT
212	Usy2 connection	P.System Data 1		L1-E L2-E L3-E L1-L2 L2-L3 L3-L1	L1-L2	VT connection for Usy2
214A	φ Usy2-Usy1	P.System Data 1		0 .. 360 °	0 °	Angle adjustment Usy2-Usy1
215	Usy1/Usy2 ratio	P.System Data 1		0.50 .. 2.00	1.00	Matching ratio Usy1 / Usy2
220	I4 transformer	P.System Data 1		Not connected In prot. line In paral. line IY starpoint	In prot. line	I4 current transformer is
221	I4/Iph CT	P.System Data 1		0.010 .. 5.000	1.000	Matching ratio I4/Iph for CT's
230	Rated Frequency	P.System Data 1		50 Hz 60 Hz	50 Hz	Rated Frequency
235	PHASE SEQ.	P.System Data 1		L1 L2 L3 L1 L3 L2	L1 L2 L3	Phase Sequence
236	Distance Unit	P.System Data 1		km Miles	km	Distance measurement unit
237	Format Z0/Z1	P.System Data 1		RE/RL, XE/XL K0	RE/RL, XE/XL	Setting format for zero seq.comp. format
238A	EarthFltO/C 1p	P.System Data 1		stages together stages separat.	stages together	Earth Fault O/C: setting for 1pole AR
239	T-CB close	P.System Data 1		0.01 .. 0.60 sec	0.06 sec	Closing (operating) time of CB
240A	TMin TRIP CMD	P.System Data 1		0.02 .. 30.00 sec	0.10 sec	Minimum TRIP Command Duration
241A	TMax CLOSE CMD	P.System Data 1		0.01 .. 30.00 sec	0.10 sec	Maximum Close Command Duration
242	T-CBtest-dead	P.System Data 1		0.00 .. 30.00 sec	0.10 sec	Dead Time for CB test-autoreclosure
302	CHANGE	Change Group		Group A Group B Group C Group D Binary Input Protocol	Group A	Change to Another Setting Group
402A	WAVEFORMTRIGGER	Osc. Fault Rec.		Save w. Pickup Save w. TRIP Start w. TRIP	Save w. Pickup	Waveform Capture
403A	WAVEFORM DATA	Osc. Fault Rec.		Fault event Pow.Sys.Flt.	Fault event	Scope of Waveform Data

Addr.	Parameter	Function	C	Setting Options	Default Setting	Comments
410	MAX. LENGTH	Osc. Fault Rec.		0.30 .. 5.00 sec	2.00 sec	Max. length of a Waveform Capture Record
411	PRE. TRIG. TIME	Osc. Fault Rec.		0.05 .. 0.50 sec	0.25 sec	Captured Waveform Prior to Trigger
412	POST REC. TIME	Osc. Fault Rec.		0.05 .. 0.50 sec	0.10 sec	Captured Waveform after Event
415	BinIn CAPT.TIME	Osc. Fault Rec.		0.10 .. 5.00 sec; ∞	0.50 sec	Capture Time via Binary Input
610	FltDisp.LED/LCD	Device		Target on PU Target on TRIP	Target on PU	Fault Display on LED / LCD
625A	T MIN LED HOLD	Device		0 .. 60 min; ∞	0 min	Minimum hold time of lachted LEDs
640	Start image DD	Device		image 1 image 2 image 3 image 4 image 5	image 1	Start image Default Display
1103	FullScaleVolt.	P.System Data 2		1.0 .. 1200.0 kV	400.0 kV	Measurement: Full Scale Voltage (100%)
1104	FullScaleCurr.	P.System Data 2		10 .. 5000 A	1000 A	Measurement: Full Scale Current (100%)
1105	Line Angle	P.System Data 2		10 .. 89 °	85 °	Line Angle
1107	P,Q sign	P.System Data 2		not reversed reversed	not reversed	P,Q operational measured values sign
1110	x'	P.System Data 2	1A	0.0050 .. 9.5000 Ω/km	0.1500 Ω/km	x' - Line Reactance per length unit
			5A	0.0010 .. 1.9000 Ω/km	0.0300 Ω/km	
1111	Line Length	P.System Data 2		0.1 .. 1000.0 km	100.0 km	Line Length
1112	x'	P.System Data 2	1A	0.0050 .. 15.0000 Ω/mi	0.2420 Ω/mi	x' - Line Reactance per length unit
			5A	0.0010 .. 3.0000 Ω/mi	0.0484 Ω/mi	
1113	Line Length	P.System Data 2		0.1 .. 650.0 Miles	62.1 Miles	Line Length
1114	c'	P.System Data 2	1A	0.000 .. 100.000 µF/km	0.010 µF/km	c' - capacit. per unit line len. µF/km
			5A	0.000 .. 500.000 µF/km	0.050 µF/km	
1115	c'	P.System Data 2	1A	0.000 .. 160.000 µF/mi	0.016 µF/mi	c' - capacit. per unit line len. µF/mile
			5A	0.000 .. 800.000 µF/mi	0.080 µF/mi	
1116	RE/RL(Z1)	P.System Data 2		-0.33 .. 10.00	1.00	Zero seq. comp. factor RE/RL for Z1
1117	XE/XL(Z1)	P.System Data 2		-0.33 .. 10.00	1.00	Zero seq. comp. factor XE/XL for Z1
1118	RE/RL(> Z1)	P.System Data 2		-0.33 .. 10.00	1.00	Zero seq. comp.factor RE/RL(> Z1)
1119	XE/XL(> Z1)	P.System Data 2		-0.33 .. 10.00	1.00	Zero seq. comp.factor XE/XL(> Z1)
1120	K0 (Z1)	P.System Data 2		0.000 .. 4.000	1.000	Zero seq. comp. factor K0 for zone Z1
1121	Angle K0(Z1)	P.System Data 2		-180.00 .. 180.00 °	0.00 °	Zero seq. comp. angle for zone Z1
1122	K0 (> Z1)	P.System Data 2		0.000 .. 4.000	1.000	Zero seq.comp.factor K0,higher zones >Z1
1123	Angle K0(> Z1)	P.System Data 2		-180.00 .. 180.00 °	0.00 °	Zero seq. comp. angle, higher zones >Z1
1126	RM/RL ParalLine	P.System Data 2		0.00 .. 8.00	0.00	Mutual Parallel Line comp. ratio RM/RL
1127	XM/XL ParalLine	P.System Data 2		0.00 .. 8.00	0.00	Mutual Parallel Line comp. ratio XM/XL
1128	RATIO Par. Comp	P.System Data 2		50 .. 95 %	85 %	Neutral current RATIO Parallel Line Comp
1130A	PoleOpenCurrent	P.System Data 2	1A	0.05 .. 1.00 A	0.10 A	Pole Open Current Threshold
			5A	0.25 .. 5.00 A	0.50 A	
1131A	PoleOpenVoltage	P.System Data 2		2 .. 70 V	30 V	Pole Open Voltage Threshold
1132A	SI Time all Cl.	P.System Data 2		0.01 .. 30.00 sec	0.05 sec	Seal-in Time after ALL closures
1133A	T DELAY SOTF	P.System Data 2		0.05 .. 30.00 sec	0.25 sec	minimal time for line open before SOTF

Addr.	Parameter	Function	C	Setting Options	Default Setting	Comments
1134	Line Closure	P.System Data 2		only with ManCl I OR U or ManCl CB OR I or M/C I or Man.Close	only with ManCl	Recognition of Line Closures with
1135	Reset Trip CMD	P.System Data 2		CurrentOpenPole Current AND CB Pickup Reset	CurrentOpenPole	RESET of Trip Command
1136	OpenPoleDetect.	P.System Data 2		OFF Current AND CB w/ measurement	w/ measurement	open pole detector
1140A	I-CTsat. Thres.	P.System Data 2	1A	0.2 .. 50.0 A; ∞	20.0 A	CT Saturation Threshold
			5A	1.0 .. 250.0 A; ∞	100.0 A	
1150A	SI Time Man.Cl	P.System Data 2		0.01 .. 30.00 sec	0.30 sec	Seal-in Time after MANUAL closures
1151	MAN. CLOSE	P.System Data 2		with Sync-check w/o Sync-check NO	NO	Manual CLOSE COMMAND generation
1152	Man.Clos. Imp.	P.System Data 2		(Setting options depend on configuration)	None	MANUAL Closure Impulse after CONTROL
1155	3pole coupling	P.System Data 2		with PICKUP with TRIP	with TRIP	3 pole coupling
1156A	Trip2phFlt	P.System Data 2		3pole 1pole leading Ø 1pole lagging Ø	3pole	Trip type with 2phase faults
1201	FCT Distance	Dis. General		ON OFF	ON	Distance protection
1202	Minimum Iph>	Dis. General	1A	0.05 .. 4.00 A	0.10 A	Phase Current threshold for dist. meas.
			5A	0.25 .. 20.00 A	0.50 A	
1203	3I0> Threshold	Dis. General	1A	0.05 .. 4.00 A	0.10 A	3I0 threshold for neutral current pickup
			5A	0.25 .. 20.00 A	0.50 A	
1204	3U0> Threshold	Dis. General		1 .. 100 V; ∞	5 V	3U0 threshold zero seq. voltage pickup
1205	3U0> COMP/ISOL.	Dis. General		10 .. 200 V; ∞	∞ V	3U0> pickup (comp/ isol. star-point)
1206	T3I0 1PHAS	Dis. General		0.00 .. 0.50 sec; ∞	0.04 sec	Delay 1ph-faults (comp/isol. star-point)
1207A	3I0>/ Iphmax	Dis. General		0.05 .. 0.30	0.10	3I0>-pickup-stabilisation (3I0> /Iphmax)
1208	SER-COMP.	Dis. General		NO YES	NO	Series compensated line
1209A	E/F recognition	Dis. General		3I0> OR 3U0> 3I0> AND 3U0>	3I0> OR 3U0>	criterion of earth fault recognition
1210	Start Timers	Dis. General		on Dis. Pickup on Zone Pickup	on Dis. Pickup	Condition for zone timer start
1211	Distance Angle	P.System Data 2 Dis. General		30 .. 90 °	85 °	Angle of inclination, distance charact.
1215	Paral.Line Comp	Dis. General		NO YES	YES	Mutual coupling parall.line compensation
1220	PHASE PREF.2phe	Dis. General		L3 (L1) ACYCLIC L1 (L3) ACYCLIC L2 (L1) ACYCLIC L1 (L2) ACYCLIC L3 (L2) ACYCLIC L2 (L3) ACYCLIC L3 (L1) CYCLIC L1 (L3) CYCLIC All loops	L3 (L1) ACYCLIC	Phase preference for 2ph-e faults
1221A	2Ph-E faults	Dis. General		Block leading Ø Block lagging Ø All loops Ø-Ø loops only Ø-E loops only	Block leading Ø	Loop selection with 2Ph-E faults
1223	Uph-ph unbal.	Dis. General		5 .. 50 %	25 %	Max Uph-ph unbal. for 1ph Flt. detection

Addr.	Parameter	Function	C	Setting Options	Default Setting	Comments
1232	SOTF zone	Dis. General		PICKUP Zone Z1B Z1B undirect. Zone Z1 Z1 undirect. Inactive	Inactive	Instantaneous trip after Switch-OnToFault
1241	R load (Ø-E)	Dis. General	1A	0.100 .. 600.000 Ω; ∞	∞ Ω	R load, minimum Load Impedance (ph-e)
			5A	0.020 .. 120.000 Ω; ∞	∞ Ω	
1242	φ load (Ø-E)	Dis. General		20 .. 60 °	45 °	PHI load, maximum Load Angle (ph-e)
1243	R load (Ø-Ø)	Dis. General	1A	0.100 .. 600.000 Ω; ∞	∞ Ω	R load, minimum Load Impedance (ph-ph)
			5A	0.020 .. 120.000 Ω; ∞	∞ Ω	
1244	φ load (Ø-Ø)	Dis. General		20 .. 60 °	45 °	PHI load, maximum Load Angle (ph-ph)
1301	Op. mode Z1	Dis. Quadril. Dis. Circle		Forward Reverse Non-Directional Inactive	Forward	Operating mode Z1
1302	R(Z1) Ø-Ø	Dis. Quadril.	1A	0.050 .. 600.000 Ω	1.250 Ω	R(Z1), Resistance for ph-ph-faults
			5A	0.010 .. 120.000 Ω	0.250 Ω	
1303	X(Z1)	Dis. Quadril.	1A	0.050 .. 600.000 Ω	2.500 Ω	X(Z1), Reactance
			5A	0.010 .. 120.000 Ω	0.500 Ω	
1304	RE(Z1) Ø-E	Dis. Quadril.	1A	0.050 .. 600.000 Ω	2.500 Ω	RE(Z1), Resistance for ph-e faults
			5A	0.010 .. 120.000 Ω	0.500 Ω	
1305	T1-1phase	Dis. General Dis. Quadril. Dis. MHO Dis. Circle		0.00 .. 30.00 sec; ∞	0.00 sec	T1-1phase, delay for single phase faults
1306	T1-multi-phase	Dis. General Dis. Quadril. Dis. MHO Dis. Circle		0.00 .. 30.00 sec; ∞	0.00 sec	T1multi-ph, delay for multi phase faults
1307	Zone Reduction	Dis. Quadril.		0 .. 45 °	0 °	Zone Reduction Angle (load compensation)
1308	Iph>(Z1)	Dis. Quadril. Dis. MHO Dis. Circle	1A	0.05 .. 20.00 A	0.20 A	Minimum current for Z1 only Iph>(Z1)
			5A	0.25 .. 100.00 A	1.00 A	
1311	Op. mode Z2	Dis. Quadril. Dis. Circle		Forward Reverse Non-Directional Inactive	Forward	Operating mode Z2
1312	R(Z2) Ø-Ø	Dis. Quadril.	1A	0.050 .. 600.000 Ω	2.500 Ω	R(Z2), Resistance for ph-ph-faults
			5A	0.010 .. 120.000 Ω	0.500 Ω	
1313	X(Z2)	Dis. Quadril.	1A	0.050 .. 600.000 Ω	5.000 Ω	X(Z2), Reactance
			5A	0.010 .. 120.000 Ω	1.000 Ω	
1314	RE(Z2) Ø-E	Dis. Quadril.	1A	0.050 .. 600.000 Ω	5.000 Ω	RE(Z2), Resistance for ph-e faults
			5A	0.010 .. 120.000 Ω	1.000 Ω	
1315	T2-1phase	Dis. General Dis. Quadril. Dis. MHO Dis. Circle		0.00 .. 30.00 sec; ∞	0.30 sec	T2-1phase, delay for single phase faults
1316	T2-multi-phase	Dis. General Dis. Quadril. Dis. MHO Dis. Circle		0.00 .. 30.00 sec; ∞	0.30 sec	T2multi-ph, delay for multi phase faults
1317A	Trip 1pole Z2	Dis. General Dis. Quadril. Dis. MHO Dis. Circle		NO YES	NO	Single pole trip for faults in Z2
1321	Op. mode Z3	Dis. Quadril. Dis. Circle		Forward Reverse Non-Directional Inactive	Reverse	Operating mode Z3
1322	R(Z3) Ø-Ø	Dis. Quadril.	1A	0.050 .. 600.000 Ω	5.000 Ω	R(Z3), Resistance for ph-ph-faults
			5A	0.010 .. 120.000 Ω	1.000 Ω	

Addr.	Parameter	Function	C	Setting Options	Default Setting	Comments
1323	X(Z3)	Dis. Quadril.	1A	0.050 .. 600.000 Ω	10.000 Ω	X(Z3), Reactance
			5A	0.010 .. 120.000 Ω	2.000 Ω	
1324	RE(Z3) Ø-E	Dis. Quadril.	1A	0.050 .. 600.000 Ω	10.000 Ω	RE(Z3), Resistance for ph-e faults
			5A	0.010 .. 120.000 Ω	2.000 Ω	
1325	T3 DELAY	Dis. General Dis. Quadril. Dis. MHO Dis. Circle		0.00 .. 30.00 sec; ∞	0.60 sec	T3 delay
1331	Op. mode Z4	Dis. Quadril. Dis. Circle		Forward Reverse Non-Directional Inactive	Non-Directional	Operating mode Z4
1332	R(Z4) Ø-Ø	Dis. Quadril.	1A	0.050 .. 600.000 Ω	12.000 Ω	R(Z4), Resistance for ph-ph-faults
			5A	0.010 .. 120.000 Ω	2.400 Ω	
1333	X(Z4)	Dis. Quadril.	1A	0.050 .. 600.000 Ω	12.000 Ω	X(Z4), Reactance
			5A	0.010 .. 120.000 Ω	2.400 Ω	
1334	RE(Z4) Ø-E	Dis. Quadril.	1A	0.050 .. 600.000 Ω	12.000 Ω	RE(Z4), Resistance for ph-e faults
			5A	0.010 .. 120.000 Ω	2.400 Ω	
1335	T4 DELAY	Dis. General Dis. Quadril. Dis. MHO Dis. Circle		0.00 .. 30.00 sec; ∞	0.90 sec	T4 delay
1341	Op. mode Z5	Dis. Quadril. Dis. Circle		Forward Reverse Non-Directional Inactive	Inactive	Operating mode Z5
1342	R(Z5) Ø-Ø	Dis. Quadril.	1A	0.050 .. 600.000 Ω	12.000 Ω	R(Z5), Resistance for ph-ph-faults
			5A	0.010 .. 120.000 Ω	2.400 Ω	
1343	X(Z5)+	Dis. Quadril.	1A	0.050 .. 600.000 Ω	12.000 Ω	X(Z5)+, Reactance for Forward direction
			5A	0.010 .. 120.000 Ω	2.400 Ω	
1344	RE(Z5) Ø-E	Dis. Quadril.	1A	0.050 .. 600.000 Ω	12.000 Ω	RE(Z5), Resistance for ph-e faults
			5A	0.010 .. 120.000 Ω	2.400 Ω	
1345	T5 DELAY	Dis. General Dis. Quadril. Dis. MHO Dis. Circle		0.00 .. 30.00 sec; ∞	0.90 sec	T5 delay
1346	X(Z5)-	Dis. Quadril.	1A	0.050 .. 600.000 Ω	4.000 Ω	X(Z5)-, Reactance for Reverse direction
			5A	0.010 .. 120.000 Ω	0.800 Ω	
1351	Op. mode Z1B	Dis. Quadril. Dis. Circle		Forward Reverse Non-Directional Inactive	Forward	Operating mode Z1B (overrreach zone)
1352	R(Z1B) Ø-Ø	Dis. Quadril.	1A	0.050 .. 600.000 Ω	1.500 Ω	R(Z1B), Resistance for ph-ph-faults
			5A	0.010 .. 120.000 Ω	0.300 Ω	
1353	X(Z1B)	Dis. Quadril.	1A	0.050 .. 600.000 Ω	3.000 Ω	X(Z1B), Reactance
			5A	0.010 .. 120.000 Ω	0.600 Ω	
1354	RE(Z1B) Ø-E	Dis. Quadril.	1A	0.050 .. 600.000 Ω	3.000 Ω	RE(Z1B), Resistance for ph-e faults
			5A	0.010 .. 120.000 Ω	0.600 Ω	
1355	T1B-1phase	Dis. General Dis. Quadril. Dis. MHO Dis. Circle		0.00 .. 30.00 sec; ∞	0.00 sec	T1B-1phase, delay for single ph. faults
1356	T1B-multi-phase	Dis. General Dis. Quadril. Dis. MHO Dis. Circle		0.00 .. 30.00 sec; ∞	0.00 sec	T1B-multi-ph, delay for multi ph. faults
1357	1st AR -> Z1B	Dis. General Dis. Quadril. Dis. MHO Dis. Circle		NO YES	YES	Z1B enabled before 1st AR (int. or ext.)
1361	Op. mode Z6	Dis. Quadril. Dis. Circle		Forward Reverse Non-Directional Inactive	Inactive	Operating mode Z6

Addr.	Parameter	Function	C	Setting Options	Default Setting	Comments
1362	R(Z6) Ø-Ø	Dis. Quadril.	1A	0.050 .. 600.000 Ω	15.000 Ω	R(Z6), Resistance for ph-ph-faults
			5A	0.010 .. 120.000 Ω	3.000 Ω	
1363	X(Z6)+	Dis. Quadril.	1A	0.050 .. 600.000 Ω	15.000 Ω	X(Z6)+, Reactance for Forward direction
			5A	0.010 .. 120.000 Ω	3.000 Ω	
1364	RE(Z6) Ø-E	Dis. Quadril.	1A	0.050 .. 600.000 Ω	15.000 Ω	RE(Z6), Resistance for ph-e faults
			5A	0.010 .. 120.000 Ω	3.000 Ω	
1365	T6 DELAY	Dis. General Dis. Quadril. Dis. MHO Dis. Circle		0.00 .. 30.00 sec; ∞	1.50 sec	T6 delay
1366	X(Z6)-	Dis. Quadril.	1A	0.050 .. 600.000 Ω	4.000 Ω	X(Z6)-, Reactance for Reverse direction
			5A	0.010 .. 120.000 Ω	0.800 Ω	
1401	Op. mode Z1	Dis. MHO		Forward Reverse Inactive	Forward	Operating mode Z1
1402	ZR(Z1)	Dis. MHO	1A	0.050 .. 200.000 Ω	2.500 Ω	ZR(Z1), Impedance Reach
			5A	0.010 .. 40.000 Ω	0.500 Ω	
1411	Op. mode Z2	Dis. MHO		Forward Reverse Inactive	Forward	Operating mode Z2
1412	ZR(Z2)	Dis. MHO	1A	0.050 .. 200.000 Ω	5.000 Ω	ZR(Z2), Impedance Reach
			5A	0.010 .. 40.000 Ω	1.000 Ω	
1421	Op. mode Z3	Dis. MHO		Forward Reverse Inactive	Reverse	Operating mode Z3
1422	ZR(Z3)	Dis. MHO	1A	0.050 .. 200.000 Ω	5.000 Ω	ZR(Z3), Impedance Reach
			5A	0.010 .. 40.000 Ω	1.000 Ω	
1431	Op. mode Z4	Dis. MHO		Forward Reverse Inactive	Forward	Operating mode Z4
1432	ZR(Z4)	Dis. MHO	1A	0.050 .. 200.000 Ω	10.000 Ω	ZR(Z4), Impedance Reach
			5A	0.010 .. 40.000 Ω	2.000 Ω	
1441	Op. mode Z5	Dis. MHO		Forward Reverse Inactive	Inactive	Operating mode Z5
1442	ZR(Z5)	Dis. MHO	1A	0.050 .. 200.000 Ω	10.000 Ω	ZR(Z5), Impedance Reach
			5A	0.010 .. 40.000 Ω	2.000 Ω	
1451	Op. mode Z1B	Dis. MHO		Forward Reverse Inactive	Forward	Operating mode Z1B (extended zone)
1452	ZR(Z1B)	Dis. MHO	1A	0.050 .. 200.000 Ω	3.000 Ω	ZR(Z1B), Impedance Reach
			5A	0.010 .. 40.000 Ω	0.600 Ω	
1461	Op. mode Z6	Dis. MHO		Forward Reverse Inactive	Inactive	Operating mode Z6
1462	ZR(Z6)	Dis. MHO	1A	0.050 .. 200.000 Ω	15.000 Ω	ZR(Z6), Impedance Reach
			5A	0.010 .. 40.000 Ω	3.000 Ω	
1471A	Mem.Polariz.PhE	Dis. MHO		0.0 .. 100.0 %	15.0 %	Voltage Memory polarization (phase-e)
1472A	CrossPolarizPhE	Dis. MHO		0.0 .. 100.0 %	15.0 %	Cross polarization (phase-e)
1473A	Mem.Polariz.P-P	Dis. MHO		0.0 .. 100.0 %	15.0 %	Voltage Memory polarization (ph-ph)
1474A	CrossPolarizP-P	Dis. MHO		0.0 .. 100.0 %	15.0 %	Cross polarization (phase-phase)
2002	P/S Op. mode	Power Swing		All zones block Z1/Z1B block >= Z2 block Z1,Z1B,Z2 block	All zones block	Power Swing Operating mode
2006	PowerSwing trip	Power Swing		NO YES	NO	Power swing trip

Addr.	Parameter	Function	C	Setting Options	Default Setting	Comments
2101	FCT Telep. Dis.	Teleprot. Dist.		ON PUTT (Z1B) POTT OFF	ON	Teleprotection for Distance protection
2102	Type of Line	Teleprot. Dist.		Two Terminals Three terminals	Two Terminals	Type of Line
2103A	Send Prolong.	Teleprot. Dist.		0.00 .. 30.00 sec	0.05 sec	Time for send signal prolongation
2107A	Delay for alarm	Teleprot. Dist.		0.00 .. 30.00 sec	10.00 sec	Time Delay for Alarm
2108	Release Delay	Teleprot. Dist.		0.000 .. 30.000 sec	0.000 sec	Time Delay for release after pickup
2109A	TrBlk Wait Time	Teleprot. Dist.		0.00 .. 30.00 sec; ∞	0.04 sec	Transient Block.: Duration external flt.
2110A	TrBlk BlockTime	Teleprot. Dist.		0.00 .. 30.00 sec	0.05 sec	Transient Block.: Blk.T. after ext. flt.
2112A	DIS TRANSBLK EF	Teleprot. Dist.		YES NO	YES	DIS transient block by EF
2113	Mem.rec.sig.	Teleprot. Dist.		YES NO	NO	Memorize receive signal
2201	FCT Direct Trip	DTT Direct Trip		ON OFF	OFF	Direct Transfer Trip (DTT)
2202	Trip Time DELAY	DTT Direct Trip		0.00 .. 30.00 sec; ∞	0.01 sec	Trip Time Delay
2401	FCT SOTF-O/C	SOTF Overcurr.		ON OFF	ON	Inst. High Speed SOTF-O/C is
2404	I>>>	SOTF Overcurr.	1A	0.10 .. 25.00 A	2.50 A	I>>> Pickup
			5A	0.50 .. 125.00 A	12.50 A	
2501	FCT Weak Infeed	Weak Infeed		OFF ECHO only ECHO and TRIP Echo &Trip(I=0)	ECHO only	Weak Infeed function
2502A	Trip/Echo DELAY	Weak Infeed		0.00 .. 30.00 sec	0.04 sec	Trip / Echo Delay after carrier receipt
2503A	Trip EXTENSION	Weak Infeed		0.00 .. 30.00 sec	0.05 sec	Trip Extension / Echo Impulse time
2504A	Echo BLOCK Time	Weak Infeed		0.00 .. 30.00 sec	0.05 sec	Echo Block Time
2505	UNDERVOLTAGE	Weak Infeed		2 .. 70 V	25 V	Undervoltage (ph-e)
2509	Echo:1channel	Weak Infeed		NO YES	NO	Echo logic: Dis and EF on common channel
2510	Uphe< Factor	Weak Infeed		0.10 .. 1.00	0.70	Factor for undervoltage Uphe<
2511	Time const. τ	Weak Infeed		1 .. 60 sec	5 sec	Time constant Tau
2512A	Rec. Ext.	Weak Infeed		0.00 .. 30.00 sec	0.65 sec	Reception extension
2513A	T 3I0> Ext.	Weak Infeed		0.00 .. 30.00 sec	0.60 sec	3I0> exceeded extension
2514	3I0> Threshold	Weak Infeed	1A	0.05 .. 1.00 A	0.50 A	3I0 threshold for neutral current pickup
			5A	0.25 .. 5.00 A	2.50 A	
2515	TM	Weak Infeed		0.00 .. 30.00 sec	0.40 sec	WI delay single pole
2516	TT	Weak Infeed		0.00 .. 30.00 sec	1.00 sec	WI delay multi pole
2517	1pol. Trip	Weak Infeed		ON OFF	ON	Single pole WI trip allowed
2518	1pol. with 3I0	Weak Infeed		ON OFF	ON	Single pole WI trip with 3I0
2519	3pol. Trip	Weak Infeed		ON OFF	ON	Three pole WI trip allowed
2520	T 3I0> alarm	Weak Infeed		0.00 .. 30.00 sec	10.00 sec	3I0> exceeded delay for alarm
2530	WI non delayed	Weak Infeed		ON OFF	ON	WI non delayed
2531	WI delayed	Weak Infeed		ON by receive fail OFF	by receive fail	WI delayed
2601	Operating Mode	Back-Up O/C		ON:with VT loss ON:always activ OFF	ON:with VT loss	Operating mode
2610	Iph>>	Back-Up O/C	1A	0.05 .. 50.00 A; ∞	2.00 A	Iph>> Pickup
			5A	0.25 .. 250.00 A; ∞	10.00 A	
2611	T Iph>>	Back-Up O/C		0.00 .. 30.00 sec; ∞	0.30 sec	T Iph>> Time delay

Addr.	Parameter	Function	C	Setting Options	Default Setting	Comments
2612	3I0>> PICKUP	Back-Up O/C	1A	0.05 .. 25.00 A; ∞	0.50 A	3I0>> Pickup
			5A	0.25 .. 125.00 A; ∞	2.50 A	
2613	T 3I0>>	Back-Up O/C		0.00 .. 30.00 sec; ∞	2.00 sec	T 3I0>> Time delay
2614	I>> Telep/BI	Back-Up O/C		NO YES	YES	Instantaneous trip via Tele-prot./BI
2615	I>> SOTF	Back-Up O/C		NO YES	NO	Instantaneous trip after Switch-OnToFault
2620	Iph>	Back-Up O/C	1A	0.05 .. 50.00 A; ∞	1.50 A	Iph> Pickup
			5A	0.25 .. 250.00 A; ∞	7.50 A	
2621	T Iph>	Back-Up O/C		0.00 .. 30.00 sec; ∞	0.50 sec	T Iph> Time delay
2622	3I0>	Back-Up O/C	1A	0.05 .. 25.00 A; ∞	0.20 A	3I0> Pickup
			5A	0.25 .. 125.00 A; ∞	1.00 A	
2623	T 3I0>	Back-Up O/C		0.00 .. 30.00 sec; ∞	2.00 sec	T 3I0> Time delay
2624	I> Telep/BI	Back-Up O/C		NO YES	NO	Instantaneous trip via Tele-prot./BI
2625	I> SOTF	Back-Up O/C		NO YES	NO	Instantaneous trip after Switch-OnToFault
2630	Iph> STUB	Back-Up O/C	1A	0.05 .. 50.00 A; ∞	1.50 A	Iph> STUB Pickup
			5A	0.25 .. 250.00 A; ∞	7.50 A	
2631	T Iph STUB	Back-Up O/C		0.00 .. 30.00 sec; ∞	0.30 sec	T Iph STUB Time delay
2632	3I0> STUB	Back-Up O/C	1A	0.05 .. 25.00 A; ∞	0.20 A	3I0> STUB Pickup
			5A	0.25 .. 125.00 A; ∞	1.00 A	
2633	T 3I0 STUB	Back-Up O/C		0.00 .. 30.00 sec; ∞	2.00 sec	T 3I0 STUB Time delay
2634	I-STUB Telep/BI	Back-Up O/C		NO YES	NO	Instantaneous trip via Tele-prot./BI
2635	I-STUB SOTF	Back-Up O/C		NO YES	NO	Instantaneous trip after Switch-OnToFault
2640	Ip>	Back-Up O/C	1A	0.10 .. 4.00 A; ∞	∞ A	Ip> Pickup
			5A	0.50 .. 20.00 A; ∞	∞ A	
2642	T Ip Time Dial	Back-Up O/C		0.05 .. 3.00 sec; ∞	0.50 sec	T Ip Time Dial
2643	Time Dial TD Ip	Back-Up O/C		0.50 .. 15.00 ; ∞	5.00	Time Dial TD Ip
2646	T Ip Add	Back-Up O/C		0.00 .. 30.00 sec	0.00 sec	T Ip Additional Time Delay
2650	3I0p PICKUP	Back-Up O/C	1A	0.05 .. 4.00 A; ∞	∞ A	3I0p Pickup
			5A	0.25 .. 20.00 A; ∞	∞ A	
2652	T 3I0p TimeDial	Back-Up O/C		0.05 .. 3.00 sec; ∞	0.50 sec	T 3I0p Time Dial
2653	TimeDial TD3I0p	Back-Up O/C		0.50 .. 15.00 ; ∞	5.00	Time Dial TD 3I0p
2656	T 3I0p Add	Back-Up O/C		0.00 .. 30.00 sec	0.00 sec	T 3I0p Additional Time Delay
2660	IEC Curve	Back-Up O/C		Normal Inverse Very Inverse Extremely Inv. LongTimeInverse	Normal Inverse	IEC Curve
2661	ANSI Curve	Back-Up O/C		Inverse Short Inverse Long Inverse Moderately Inv. Very Inverse Extremely Inv. Definite Inv.	Inverse	ANSI Curve
2670	I(3I0)p Tele/BI	Back-Up O/C		NO YES	NO	Instantaneous trip via Tele-prot./BI
2671	I(3I0)p SOTF	Back-Up O/C		NO YES	NO	Instantaneous trip after Switch-OnToFault
2680	SOTF Time DELAY	Back-Up O/C		0.00 .. 30.00 sec	0.00 sec	Trip time delay after SOTF
2801	DMD Interval	Demand meter		15 Min., 1 Sub 15 Min., 3 Subs 15 Min.,15 Subs 30 Min., 1 Sub 60 Min., 1 Sub	60 Min., 1 Sub	Demand Calculation Intervals
2802	DMD Sync.Time	Demand meter		On The Hour 15 After Hour 30 After Hour 45 After Hour	On The Hour	Demand Synchronization Time

Addr.	Parameter	Function	C	Setting Options	Default Setting	Comments
2811	MinMax cycRESET	Min/Max meter		NO YES	YES	Automatic Cyclic Reset Function
2812	MiMa RESET TIME	Min/Max meter		0 .. 1439 min	0 min	MinMax Reset Timer
2813	MiMa RESETCYCLE	Min/Max meter		1 .. 365 Days	7 Days	MinMax Reset Cycle Period
2814	MinMaxRES.START	Min/Max meter		1 .. 365 Days	1 Days	MinMax Start Reset Cycle in
2901	MEASURE. SUPERV	Measurem.Superv		ON OFF	ON	Measurement Supervision
2902A	BALANCE U-LIMIT	Measurem.Superv		10 .. 100 V	50 V	Voltage Threshold for Balance Monitoring
2903A	BAL. FACTOR U	Measurem.Superv		0.58 .. 0.95	0.75	Balance Factor for Voltage Monitor
2904A	BALANCE I LIMIT	Measurem.Superv	1A	0.10 .. 1.00 A	0.50 A	Current Balance Monitor
			5A	0.50 .. 5.00 A	2.50 A	
2905A	BAL. FACTOR I	Measurem.Superv		0.10 .. 0.95	0.50	Balance Factor for Current Monitor
2906A	ΣI THRESHOLD	Measurem.Superv	1A	0.05 .. 2.00 A	0.10 A	Summated Current Monitoring Threshold
			5A	0.25 .. 10.00 A	0.50 A	
2907A	ΣI FACTOR	Measurem.Superv		0.00 .. 0.95	0.10	Summated Current Monitoring Factor
2908A	T BAL. U LIMIT	Measurem.Superv		5 .. 100 sec	5 sec	T Balance Factor for Voltage Monitor
2909A	T BAL. I LIMIT	Measurem.Superv		5 .. 100 sec	5 sec	T Current Balance Monitor
2910	FUSE FAIL MON.	Measurem.Superv		ON OFF	ON	Fuse Failure Monitor
2911A	FFM U>(min)	Measurem.Superv		10 .. 100 V	30 V	Minimum Voltage Threshold U>
2912A	FFM I< (max)	Measurem.Superv	1A	0.10 .. 1.00 A	0.10 A	Maximum Current Threshold I<
			5A	0.50 .. 5.00 A	0.50 A	
2913A	FFM U<max (3ph)	Measurem.Superv		2 .. 100 V	15 V	Maximum Voltage Threshold U< (3phase)
2914A	FFM Idelta (3p)	Measurem.Superv	1A	0.05 .. 1.00 A	0.10 A	Delta Current Threshold (3phase)
			5A	0.25 .. 5.00 A	0.50 A	
2915	V-Supervision	Measurem.Superv		w/ CURR.SUP w/ I> & CBaux OFF	w/ CURR.SUP	Voltage Failure Supervision
2916A	T V-Supervision	Measurem.Superv		0.00 .. 30.00 sec	3.00 sec	Delay Voltage Failure Supervision
2921	T mcb	Measurem.Superv		0 .. 30 ms	0 ms	VT mcb operating time
2941	φA	Measurem.Superv		0 .. 359 °	200 °	Limit setting PhiA
2942	φB	Measurem.Superv		0 .. 359 °	340 °	Limit setting PhiB
2943	I1>	Measurem.Superv	1A	0.05 .. 2.00 A	0.05 A	Minimum value I1>
			5A	0.25 .. 10.00 A	0.25 A	
2944	U1>	Measurem.Superv		2 .. 70 V	20 V	Minimum value U1>
3101	FCT EarthFltO/C	Earth Fault O/C		ON OFF	ON	Earth Fault overcurrent function
3102	BLOCK for Dist.	Earth Fault O/C		every PICKUP 1phase PICKUP multiph. PICKUP NO	every PICKUP	Block E/F for Distance protection
3103	BLOCK 1pDeadTim	Earth Fault O/C		YES NO	YES	Block E/F for 1pole Dead time
3104A	Iph-STAB. Slope	Earth Fault O/C		0 .. 30 %	10 %	Stabilisation Slope with Iphase
3105	3IoMin Teleprot	Earth Fault O/C	1A	0.01 .. 1.00 A	0.50 A	3Io-Min threshold for Teleprot. schemes
			5A	0.05 .. 5.00 A	2.50 A	
3105	3IoMin Teleprot	Earth Fault O/C	1A	0.003 .. 1.000 A	0.500 A	3Io-Min threshold for Teleprot. schemes
			5A	0.015 .. 5.000 A	2.500 A	
3109	Trip 1pole E/F	Earth Fault O/C		YES NO	YES	Single pole trip with earth flt.prot.
3110	Op. mode 3I0>>>	Earth Fault O/C		Forward Reverse Non-Directional Inactive	Inactive	Operating mode

Addr.	Parameter	Function	C	Setting Options	Default Setting	Comments
3111	3I0>>>	Earth Fault O/C	1A	0.05 .. 25.00 A	4.00 A	3I0>>> Pickup
			5A	0.25 .. 125.00 A	20.00 A	
3112	T 3I0>>>	Earth Fault O/C		0.00 .. 30.00 sec; ∞	0.30 sec	T 3I0>>> Time delay
3113	3I0>>> Telep/BI	Earth Fault O/C		NO YES	NO	Instantaneous trip via Tele-prot./BI
3114	3I0>>>SOTF-Trip	Earth Fault O/C		NO YES	NO	Instantaneous trip after Switch-OnToFault
3115	3I0>>>InrushBlk	Earth Fault O/C		NO YES	NO	Inrush Blocking
3116	BLK /1p 3I0>>>	Earth Fault O/C		YES No (non-dir.)	YES	Block 3I0>>> during 1pole dead time
3117	Trip 1p 3I0>>>	Earth Fault O/C		YES NO	YES	Single pole trip with 3I0>>>
3120	Op. mode 3I0>>	Earth Fault O/C		Forward Reverse Non-Directional Inactive	Inactive	Operating mode
3121	3I0>>	Earth Fault O/C	1A	0.05 .. 25.00 A	2.00 A	3I0>> Pickup
			5A	0.25 .. 125.00 A	10.00 A	
3122	T 3I0>>	Earth Fault O/C		0.00 .. 30.00 sec; ∞	0.60 sec	T 3I0>> Time Delay
3123	3I0>> Telep/BI	Earth Fault O/C		NO YES	NO	Instantaneous trip via Tele-prot./BI
3124	3I0>> SOTF-Trip	Earth Fault O/C		NO YES	NO	Instantaneous trip after Switch-OnToFault
3125	3I0>> InrushBlk	Earth Fault O/C		NO YES	NO	Inrush Blocking
3126	BLK /1p 3I0>>	Earth Fault O/C		YES No (non-dir.)	YES	Block 3I0>> during 1pole dead time
3127	Trip 1p 3I0>>	Earth Fault O/C		YES NO	YES	Single pole trip with 3I0>>
3130	Op. mode 3I0>	Earth Fault O/C		Forward Reverse Non-Directional Inactive	Inactive	Operating mode
3131	3I0>	Earth Fault O/C	1A	0.05 .. 25.00 A	1.00 A	3I0> Pickup
			5A	0.25 .. 125.00 A	5.00 A	
3131	3I0>	Earth Fault O/C	1A	0.003 .. 25.000 A	1.000 A	3I0> Pickup
			5A	0.015 .. 125.000 A	5.000 A	
3132	T 3I0>	Earth Fault O/C		0.00 .. 30.00 sec; ∞	0.90 sec	T 3I0> Time Delay
3133	3I0> Telep/BI	Earth Fault O/C		NO YES	NO	Instantaneous trip via Tele-prot./BI
3134	3I0> SOTF-Trip	Earth Fault O/C		NO YES	NO	Instantaneous trip after Switch-OnToFault
3135	3I0> InrushBlk	Earth Fault O/C		NO YES	NO	Inrush Blocking
3136	BLK /1p 3I0>	Earth Fault O/C		YES No (non-dir.)	YES	Block 3I0> during 1pole dead time
3137	Trip 1p 3I0>	Earth Fault O/C		YES NO	YES	Single pole trip with 3I0>
3140	Op. mode 3I0p	Earth Fault O/C Earth Fault O/C Earth Fault O/C Earth Fault O/C		Forward Reverse Non-Directional Inactive	Inactive	Operating mode
3141	3I0p PICKUP	Earth Fault O/C Earth Fault O/C Earth Fault O/C Earth Fault O/C	1A	0.05 .. 25.00 A	1.00 A	3I0p Pickup
			5A	0.25 .. 125.00 A	5.00 A	
3141	3I0p PICKUP	Earth Fault O/C Earth Fault O/C Earth Fault O/C Earth Fault O/C	1A	0.003 .. 25.000 A	1.000 A	3I0p Pickup
			5A	0.015 .. 125.000 A	5.000 A	
3142	3I0p MinT-DELAY	Earth Fault O/C		0.00 .. 30.00 sec	1.20 sec	3I0p Minimum Time Delay
3143	3I0p Time Dial	Earth Fault O/C		0.05 .. 3.00 sec; ∞	0.50 sec	3I0p Time Dial
3144	3I0p Time Dial	Earth Fault O/C		0.50 .. 15.00 ; ∞	5.00	3I0p Time Dial

Addr.	Parameter	Function	C	Setting Options	Default Setting	Comments
3145	3I0p Time Dial	Earth Fault O/C		0.05 .. 15.00 sec; ∞	1.35 sec	3I0p Time Dial
3146	3I0p MaxT-DELAY	Earth Fault O/C		0.00 .. 30.00 sec	5.80 sec	3I0p Maximum Time Delay
3147	Add.T-DELAY	Earth Fault O/C Earth Fault O/C Earth Fault O/C Earth Fault O/C		0.00 .. 30.00 sec; ∞	1.20 sec	Additional Time Delay
3148	3I0p Telep/BI	Earth Fault O/C Earth Fault O/C Earth Fault O/C Earth Fault O/C		NO YES	NO	Instantaneous trip via Tele-prot./BI
3149	3I0p SOTF-Trip	Earth Fault O/C Earth Fault O/C Earth Fault O/C Earth Fault O/C		NO YES	NO	Instantaneous trip after Switch-OnToFault
3150	3I0p InrushBlk	Earth Fault O/C Earth Fault O/C Earth Fault O/C Earth Fault O/C		NO YES	NO	Inrush Blocking
3151	IEC Curve	Earth Fault O/C		Normal Inverse Very Inverse Extremely Inv. LongTimeInverse	Normal Inverse	IEC Curve
3152	ANSI Curve	Earth Fault O/C		Inverse Short Inverse Long Inverse Moderately Inv. Very Inverse Extremely Inv. Definite Inv.	Inverse	ANSI Curve
3153	LOG Curve	Earth Fault O/C		Log. inverse	Log. inverse	LOGARITHMIC Curve
3154	3I0p Startpoint	Earth Fault O/C		1.0 .. 4.0	1.1	Start point of inverse characteristic
3155	k	Earth Fault O/C		0.00 .. 3.00 sec	0.50 sec	k-factor for Sr-characteristic
3156	S ref	Earth Fault O/C	1A	1 .. 100 VA	10 VA	S ref for Sr-characteristic
			5A	5 .. 500 VA	50 VA	
3157	BLK /1p 3I0p	Earth Fault O/C Earth Fault O/C Earth Fault O/C Earth Fault O/C		YES No (non-dir.)	YES	Block 3I0p during 1pole dead time
3158	Trip 1p 3I0p	Earth Fault O/C Earth Fault O/C Earth Fault O/C Earth Fault O/C		YES NO	YES	Single pole trip with 3I0p
3160	POLARIZATION	Earth Fault O/C		U0 + IY or U2 U0 + IY with IY only with U2 and I2 zero seq. power	U0 + IY or U2	Polarization
3162A	Dir. ALPHA	Earth Fault O/C		0 .. 360 °	338 °	ALPHA, lower angle for forward direction
3163A	Dir. BETA	Earth Fault O/C		0 .. 360 °	122 °	BETA, upper angle for forward direction
3164	3U0>	Earth Fault O/C		0.5 .. 10.0 V	0.5 V	Min. zero seq.voltage 3U0 for polarizing
3165	IY>	Earth Fault O/C	1A	0.05 .. 1.00 A	0.05 A	Min. earth current IY for polarizing
			5A	0.25 .. 5.00 A	0.25 A	
3166	3U2>	Earth Fault O/C		0.5 .. 10.0 V	0.5 V	Min. neg. seq. polarizing voltage 3U2
3167	3I2>	Earth Fault O/C	1A	0.05 .. 1.00 A	0.05 A	Min. neg. seq. polarizing current 3I2
			5A	0.25 .. 5.00 A	0.25 A	
3168	PHI comp	Earth Fault O/C		0 .. 360 °	255 °	Compensation angle PHI comp. for Sr
3169	S forward	Earth Fault O/C	1A	0.1 .. 10.0 VA	0.3 VA	Forward direction power threshold
			5A	0.5 .. 50.0 VA	1.5 VA	
3170	2nd InrushRest	Earth Fault O/C		10 .. 45 %	15 %	2nd harmonic ratio for inrush restraint

Addr.	Parameter	Function	C	Setting Options	Default Setting	Comments
3171	Imax InrushRest	Earth Fault O/C	1A	0.50 .. 25.00 A	7.50 A	Max.Current, overriding inrush restraint
			5A	2.50 .. 125.00 A	37.50 A	
3172	SOTF Op. Mode	Earth Fault O/C		PICKUP PICKUP+DIRECT.	PICKUP+DIRECT.	Instantaneous mode after SwitchOnToFault
3173	SOTF Time DELAY	Earth Fault O/C		0.00 .. 30.00 sec	0.00 sec	Trip time delay after SOTF
3174	BLK for DisZone	Earth Fault O/C		in zone Z1 in zone Z1/Z1B in each zone	in each zone	Block E/F for Distance Protection Pickup
3182	3U0>(U0 inv)	Earth Fault O/C		1.0 .. 10.0 V	5.0 V	3U0> setpoint
3183	U0inv. minimum	Earth Fault O/C		0.1 .. 5.0 V	0.2 V	Minimum voltage U0min for T->oo
3184	T forw. (U0inv)	Earth Fault O/C		0.00 .. 32.00 sec	0.90 sec	T-forward Time delay (U0inv)
3185	T rev. (U0inv)	Earth Fault O/C		0.00 .. 32.00 sec	1.20 sec	T-reverse Time delay (U0inv)
3186A	3U0< forward	Earth Fault O/C		0.1 .. 10.0 V; 0	0.0 V	3U0 min for forward direction
3187A	XserCap	Earth Fault O/C	1A	0.000 .. 600.000 Ω	0.000 Ω	Reactance X of series capacitor
			5A	0.000 .. 120.000 Ω	0.000 Ω	
3201	FCT Telep. E/F	Teleprot. E/F		ON OFF	ON	Teleprotection for Earth Fault O/C
3202	Line Config.	Teleprot. E/F		Two Terminals Three terminals	Two Terminals	Line Configuration
3203A	Send Prolong.	Teleprot. E/F		0.00 .. 30.00 sec	0.05 sec	Time for send signal prolongation
3207A	Delay for alarm	Teleprot. E/F		0.00 .. 30.00 sec	10.00 sec	Unblocking: Time Delay for Alarm
3208	Release Delay	Teleprot. E/F		0.000 .. 30.000 sec	0.000 sec	Time Delay for release after pickup
3209A	TrBlk Wait Time	Teleprot. E/F		0.00 .. 30.00 sec; ∞	0.04 sec	Transient Block.: Duration external flt.
3210A	TrBlk BlockTime	Teleprot. E/F		0.00 .. 30.00 sec	0.05 sec	Transient Block.: Blk.T. after ext. flt.
3212A	EF TRANSBLK DIS	Teleprot. E/F		YES NO	YES	EF transient block by DIS
3401	AUTO RECLOSE	Autoreclosure		OFF ON	ON	Auto-Reclose function
3402	CB? 1.TRIP	Autoreclosure		YES NO	NO	CB ready interrogation at 1st trip
3403	T-RECLAIM	Autoreclosure		0.50 .. 300.00 sec	3.00 sec	Reclaim time after successful AR cycle
3403	T-RECLAIM	Autoreclosure		0.50 .. 300.00 sec; 0	3.00 sec	Reclaim time after successful AR cycle
3404	T-BLOCK MC	Autoreclosure		0.50 .. 300.00 sec; 0	1.00 sec	AR blocking duration after manual close
3406	EV. FLT. RECOG.	Autoreclosure		with PICKUP with TRIP	with TRIP	Evolving fault recognition
3407	EV. FLT. MODE	Autoreclosure		blocks AR starts 3p AR	starts 3p AR	Evolving fault (during the dead time)
3408	T-Start MONITOR	Autoreclosure		0.01 .. 300.00 sec	0.20 sec	AR start-signal monitoring time
3409	CB TIME OUT	Autoreclosure		0.01 .. 300.00 sec	3.00 sec	Circuit Breaker (CB) Supervision Time
3410	T RemoteClose	Autoreclosure		0.00 .. 300.00 sec; ∞	∞ sec	Send delay for remote close command
3411A	T-DEAD EXT.	Autoreclosure		0.50 .. 300.00 sec; ∞	∞ sec	Maximum dead time extension
3420	AR w/ DIST.	Autoreclosure		YES NO	YES	AR with distance protection
3421	AR w/ SOTF-O/C	Autoreclosure		YES NO	YES	AR with switch-onto-fault overcurrent
3422	AR w/ W/I	Autoreclosure		YES NO	YES	AR with weak infeed tripping
3423	AR w/ EF-O/C	Autoreclosure		YES NO	YES	AR with earth fault overcurrent prot.
3424	AR w/ DTT	Autoreclosure		YES NO	YES	AR with direct transfer trip
3425	AR w/ BackUpO/C	Autoreclosure		YES NO	YES	AR with back-up overcurrent

Addr.	Parameter	Function	C	Setting Options	Default Setting	Comments
3430	AR TRIP 3pole	Autoreclosure Autoreclosure		YES NO	YES	3pole TRIP by AR
3431	DLC or RDT	Autoreclosure		WITHOUT RDT DLC	WITHOUT	Dead Line Check or Reduced Dead Time
3433	T-ACTION ADT	Autoreclosure		0.01 .. 300.00 sec; ∞	0.20 sec	Action time
3434	T-MAX ADT	Autoreclosure		0.50 .. 3000.00 sec	5.00 sec	Maximum dead time
3435	ADT 1p allowed	Autoreclosure		YES NO	NO	1pole TRIP allowed
3436	ADT CB? CLOSE	Autoreclosure		YES NO	NO	CB ready interrogation before re-closing
3437	ADT SynRequest	Autoreclosure		YES NO	NO	Request for synchro-check after 3pole AR
3438	T U-stable	Autoreclosure Autoreclosure		0.10 .. 30.00 sec	0.10 sec	Supervision time for dead/ live voltage
3440	U-live>	Autoreclosure Autoreclosure		30 .. 90 V	48 V	Voltage threshold for live line or bus
3441	U-dead<	Autoreclosure Autoreclosure		2 .. 70 V	30 V	Voltage threshold for dead line or bus
3450	1.AR: START	Autoreclosure		YES NO	YES	Start of AR allowed in this cycle
3451	1.AR: T-ACTION	Autoreclosure		0.01 .. 300.00 sec; ∞	0.20 sec	Action time
3453	1.AR Tdead 1Flt	Autoreclosure		0.01 .. 1800.00 sec; ∞	1.20 sec	Dead time after 1phase faults
3454	1.AR Tdead 2Flt	Autoreclosure		0.01 .. 1800.00 sec; ∞	1.20 sec	Dead time after 2phase faults
3455	1.AR Tdead 3Flt	Autoreclosure		0.01 .. 1800.00 sec; ∞	0.50 sec	Dead time after 3phase faults
3456	1.AR Tdead1Trip	Autoreclosure		0.01 .. 1800.00 sec; ∞	1.20 sec	Dead time after 1pole trip
3457	1.AR Tdead3Trip	Autoreclosure		0.01 .. 1800.00 sec; ∞	0.50 sec	Dead time after 3pole trip
3458	1.AR: Tdead EV.	Autoreclosure		0.01 .. 1800.00 sec	1.20 sec	Dead time after evolving fault
3459	1.AR: CB? CLOSE	Autoreclosure		YES NO	NO	CB ready interrogation before re-closing
3460	1.AR SynRequest	Autoreclosure		YES NO	NO	Request for synchro-check after 3pole AR
3461	2.AR: START	Autoreclosure		YES NO	NO	AR start allowed in this cycle
3462	2.AR: T-ACTION	Autoreclosure		0.01 .. 300.00 sec; ∞	0.20 sec	Action time
3464	2.AR Tdead 1Flt	Autoreclosure		0.01 .. 1800.00 sec; ∞	1.20 sec	Dead time after 1phase faults
3465	2.AR Tdead 2Flt	Autoreclosure		0.01 .. 1800.00 sec; ∞	1.20 sec	Dead time after 2phase faults
3466	2.AR Tdead 3Flt	Autoreclosure		0.01 .. 1800.00 sec; ∞	0.50 sec	Dead time after 3phase faults
3467	2.AR Tdead1Trip	Autoreclosure		0.01 .. 1800.00 sec; ∞	∞ sec	Dead time after 1pole trip
3468	2.AR Tdead3Trip	Autoreclosure		0.01 .. 1800.00 sec; ∞	0.50 sec	Dead time after 3pole trip
3469	2.AR: Tdead EV.	Autoreclosure		0.01 .. 1800.00 sec	1.20 sec	Dead time after evolving fault
3470	2.AR: CB? CLOSE	Autoreclosure		YES NO	NO	CB ready interrogation before re-closing
3471	2.AR SynRequest	Autoreclosure		YES NO	NO	Request for synchro-check after 3pole AR
3472	3.AR: START	Autoreclosure		YES NO	NO	AR start allowed in this cycle
3473	3.AR: T-ACTION	Autoreclosure		0.01 .. 300.00 sec; ∞	0.20 sec	Action time
3475	3.AR Tdead 1Flt	Autoreclosure		0.01 .. 1800.00 sec; ∞	1.20 sec	Dead time after 1phase faults
3476	3.AR Tdead 2Flt	Autoreclosure		0.01 .. 1800.00 sec; ∞	1.20 sec	Dead time after 2phase faults
3477	3.AR Tdead 3Flt	Autoreclosure		0.01 .. 1800.00 sec; ∞	0.50 sec	Dead time after 3phase faults
3478	3.AR Tdead1Trip	Autoreclosure		0.01 .. 1800.00 sec; ∞	∞ sec	Dead time after 1pole trip
3479	3.AR Tdead3Trip	Autoreclosure		0.01 .. 1800.00 sec; ∞	0.50 sec	Dead time after 3pole trip
3480	3.AR: Tdead EV.	Autoreclosure		0.01 .. 1800.00 sec	1.20 sec	Dead time after evolving fault
3481	3.AR: CB? CLOSE	Autoreclosure		YES NO	NO	CB ready interrogation before re-closing
3482	3.AR SynRequest	Autoreclosure		YES NO	NO	Request for synchro-check after 3pole AR
3483	4.AR: START	Autoreclosure		YES NO	NO	AR start allowed in this cycle
3484	4.AR: T-ACTION	Autoreclosure		0.01 .. 300.00 sec; ∞	0.20 sec	Action time

Addr.	Parameter	Function	C	Setting Options	Default Setting	Comments
3486	4.AR Tdead 1Flt	Autoreclosure		0.01 .. 1800.00 sec; ∞	1.20 sec	Dead time after 1phase faults
3487	4.AR Tdead 2Flt	Autoreclosure		0.01 .. 1800.00 sec; ∞	1.20 sec	Dead time after 2phase faults
3488	4.AR Tdead 3Flt	Autoreclosure		0.01 .. 1800.00 sec; ∞	0.50 sec	Dead time after 3phase faults
3489	4.AR Tdead1Trip	Autoreclosure		0.01 .. 1800.00 sec; ∞	∞ sec	Dead time after 1pole trip
3490	4.AR Tdead3Trip	Autoreclosure		0.01 .. 1800.00 sec; ∞	0.50 sec	Dead time after 3pole trip
3491	4.AR: Tdead EV.	Autoreclosure		0.01 .. 1800.00 sec	1.20 sec	Dead time after evolving fault
3492	4.AR: CB? CLOSE	Autoreclosure		YES NO	NO	CB ready interrogation before re-closing
3493	4.AR SynRequest	Autoreclosure		YES NO	NO	Request for synchro-check after 3pole AR
3501	FCT Synchronism	Sync. Check		ON OFF ON:w/o CloseCmd	ON	Synchronism and Voltage Check function
3502	Dead Volt. Thr.	Sync. Check		1 .. 100 V	5 V	Voltage threshold dead line / bus
3503	Live Volt. Thr.	Sync. Check		20 .. 125 V	90 V	Voltage threshold live line / bus
3504	Umax	Sync. Check		20 .. 140 V	110 V	Maximum permissible voltage
3507	T-SYN. DURATION	Sync. Check		0.01 .. 600.00 sec; ∞	1.00 sec	Maximum duration of synchro-nism-check
3508	T SYNC-STAB	Sync. Check		0.00 .. 30.00 sec	0.00 sec	Synchronous condition stability timer
3509	SyncCB	Sync. Check		(Setting options depend on configuration)	None	Synchronizable circuit breaker
3510	Op.mode with AR	Sync. Check		with T-CB close w/o T-CB close	w/o T-CB close	Operating mode with AR
3511	AR maxVolt.Diff	Sync. Check		1.0 .. 60.0 V	2.0 V	Maximum voltage difference
3512	AR maxFreq.Diff	Sync. Check		0.03 .. 2.00 Hz	0.10 Hz	Maximum frequency difference
3513	AR maxAngleDiff	Sync. Check		2 .. 80 °	10 °	Maximum angle difference
3515A	AR SYNC-CHECK	Sync. Check		YES NO	YES	AR at Usy2>, Usy1>, and Synchr.
3516	AR Usy1<Usy2>	Sync. Check		YES NO	NO	AR at Usy1< and Usy2>
3517	AR Usy1>Usy2<	Sync. Check		YES NO	NO	AR at Usy1> and Usy2<
3518	AR Usy1<Usy2<	Sync. Check		YES NO	NO	AR at Usy1< and Usy2<
3519	AR OVERRIDE	Sync. Check		YES NO	NO	Override of any check before AR
3530	Op.mode with MC	Sync. Check		with T-CB close w/o T-CB close	w/o T-CB close	Operating mode with Man.Cl
3531	MC maxVolt.Diff	Sync. Check		1.0 .. 60.0 V	2.0 V	Maximum voltage difference
3532	MC maxFreq.Diff	Sync. Check		0.03 .. 2.00 Hz	0.10 Hz	Maximum frequency difference
3533	MC maxAngleDiff	Sync. Check		2 .. 80 °	10 °	Maximum angle difference
3535A	MC SYNCHR	Sync. Check		YES NO	YES	Manual Close at Usy2>, Usy1>, and Synchr
3536	MC Usy1< Usy2>	Sync. Check		YES NO	NO	Manual Close at Usy1< and Usy2>
3537	MC Usy1> Usy2<	Sync. Check		YES NO	NO	Manual Close at Usy1> and Usy2<
3538	MC Usy1< Usy2<	Sync. Check		YES NO	NO	Manual Close at Usy1< and Usy2<
3539	MC OVERRIDE	Sync. Check		YES NO	NO	Override of any check before Man.Cl
3601	O/U FREQ. f1	Frequency Prot.		ON: Alarm only ON: with Trip OFF	ON: Alarm only	Over/Under Frequency Protec-tion stage f1
3602	f1 PICKUP	Frequency Prot.		45.50 .. 54.50 Hz	49.50 Hz	f1 Pickup
3603	f1 PICKUP	Frequency Prot.		55.50 .. 64.50 Hz	59.50 Hz	f1 Pickup
3604	T f1	Frequency Prot.		0.00 .. 600.00 sec	60.00 sec	T f1 Time Delay
3611	O/U FREQ. f2	Frequency Prot.		ON: Alarm only ON: with Trip OFF	ON: Alarm only	Over/Under Frequency Protec-tion stage f2
3612	f2 PICKUP	Frequency Prot.		45.50 .. 54.50 Hz	49.00 Hz	f2 Pickup

Addr.	Parameter	Function	C	Setting Options	Default Setting	Comments
3613	f2 PICKUP	Frequency Prot.		55.50 .. 64.50 Hz	57.00 Hz	f2 Pickup
3614	T f2	Frequency Prot.		0.00 .. 600.00 sec	30.00 sec	T f2 Time Delay
3621	O/U FREQ. f3	Frequency Prot.		ON: Alarm only ON: with Trip OFF	ON: Alarm only	Over/Under Frequency Protection stage f3
3622	f3 PICKUP	Frequency Prot.		45.50 .. 54.50 Hz	47.50 Hz	f3 Pickup
3623	f3 PICKUP	Frequency Prot.		55.50 .. 64.50 Hz	59.50 Hz	f3 Pickup
3624	T f3	Frequency Prot.		0.00 .. 600.00 sec	3.00 sec	T f3 Time Delay
3631	O/U FREQ. f4	Frequency Prot.		ON: Alarm only ON: with Trip OFF	ON: Alarm only	Over/Under Frequency Protection stage f4
3632	f4 PICKUP	Frequency Prot.		45.50 .. 54.50 Hz	51.00 Hz	f4 Pickup
3633	f4 PICKUP	Frequency Prot.		55.50 .. 64.50 Hz	62.00 Hz	f4 Pickup
3634	T f4	Frequency Prot.		0.00 .. 600.00 sec	30.00 sec	T f4 Time Delay
3701	Uph-e>(>)	Voltage Prot.		OFF Alarm Only ON U>Alarm U>>Trip	OFF	Operating mode Uph-e overvoltage prot.
3702	Uph-e>	Voltage Prot.		1.0 .. 170.0 V; ∞	85.0 V	Uph-e> Pickup
3703	T Uph-e>	Voltage Prot.		0.00 .. 100.00 sec; ∞	2.00 sec	T Uph-e> Time Delay
3704	Uph-e>>	Voltage Prot.		1.0 .. 170.0 V; ∞	100.0 V	Uph-e>> Pickup
3705	T Uph-e>>	Voltage Prot.		0.00 .. 100.00 sec; ∞	1.00 sec	T Uph-e>> Time Delay
3709A	Uph-e>(>) RESET	Voltage Prot.		0.30 .. 0.99	0.98	Uph-e>(>) Reset ratio
3711	Uph-ph>(>)	Voltage Prot.		OFF Alarm Only ON U>Alarm U>>Trip	OFF	Operating mode Uph-ph overvoltage prot.
3712	Uph-ph>	Voltage Prot.		2.0 .. 220.0 V; ∞	150.0 V	Uph-ph> Pickup
3713	T Uph-ph>	Voltage Prot.		0.00 .. 100.00 sec; ∞	2.00 sec	T Uph-ph> Time Delay
3714	Uph-ph>>	Voltage Prot.		2.0 .. 220.0 V; ∞	175.0 V	Uph-ph>> Pickup
3715	T Uph-ph>>	Voltage Prot.		0.00 .. 100.00 sec; ∞	1.00 sec	T Uph-ph>> Time Delay
3719A	Uphph>(>) RESET	Voltage Prot.		0.30 .. 0.99	0.98	Uph-ph>(>) Reset ratio
3721	3U0>(>) (or Ux)	Voltage Prot.		OFF Alarm Only ON U>Alarm U>>Trip	OFF	Operating mode 3U0 (or Ux) overvoltage
3722	3U0>	Voltage Prot.		1.0 .. 220.0 V; ∞	30.0 V	3U0> Pickup (or Ux>)
3723	T 3U0>	Voltage Prot.		0.00 .. 100.00 sec; ∞	2.00 sec	T 3U0> Time Delay (or T Ux>)
3724	3U0>>	Voltage Prot.		1.0 .. 220.0 V; ∞	50.0 V	3U0>> Pickup (or Ux>>)
3725	T 3U0>>	Voltage Prot.		0.00 .. 100.00 sec; ∞	1.00 sec	T 3U0>> Time Delay (or T Ux>>)
3728A	3U0>(>) Stabil.	Voltage Prot.		ON OFF	ON	3U0>(>): Stabilization 3U0-Measurement
3729A	3U0>(>) RESET	Voltage Prot.		0.30 .. 0.99	0.95	3U0>(>) Reset ratio (or Ux)
3731	U1>(>)	Voltage Prot.		OFF Alarm Only ON U>Alarm U>>Trip	OFF	Operating mode U1 overvoltage prot.
3732	U1>	Voltage Prot.		2.0 .. 220.0 V; ∞	150.0 V	U1> Pickup
3733	T U1>	Voltage Prot.		0.00 .. 100.00 sec; ∞	2.00 sec	T U1> Time Delay
3734	U1>>	Voltage Prot.		2.0 .. 220.0 V; ∞	175.0 V	U1>> Pickup
3735	T U1>>	Voltage Prot.		0.00 .. 100.00 sec; ∞	1.00 sec	T U1>> Time Delay
3736	U1> Compound	Voltage Prot.		OFF ON	OFF	U1> with Compounding
3737	U1>> Compound	Voltage Prot.		OFF ON	OFF	U1>> with Compounding
3739A	U1>(>) RESET	Voltage Prot.		0.30 .. 0.99	0.98	U1>(>) Reset ratio
3741	U2>(>)	Voltage Prot.		OFF Alarm Only ON U>Alarm U>>Trip	OFF	Operating mode U2 overvoltage prot.
3742	U2>	Voltage Prot.		2.0 .. 220.0 V; ∞	30.0 V	U2> Pickup
3743	T U2>	Voltage Prot.		0.00 .. 100.00 sec; ∞	2.00 sec	T U2> Time Delay

Addr.	Parameter	Function	C	Setting Options	Default Setting	Comments
3744	U2>>	Voltage Prot.		2.0 .. 220.0 V; ∞	50.0 V	U2>> Pickup
3745	T U2>>	Voltage Prot.		0.00 .. 100.00 sec; ∞	1.00 sec	T U2>> Time Delay
3749A	U2>(>) RESET	Voltage Prot.		0.30 .. 0.99	0.98	U2>(>) Reset ratio
3751	Uph-e<(<)	Voltage Prot.		OFF Alarm Only ON U<Alarm U<<Trip	OFF	Operating mode Uph-e undervoltage prot.
3752	Uph-e<	Voltage Prot.		1.0 .. 100.0 V; 0	30.0 V	Uph-e< Pickup
3753	T Uph-e<	Voltage Prot.		0.00 .. 100.00 sec; ∞	2.00 sec	T Uph-e< Time Delay
3754	Uph-e<<	Voltage Prot.		1.0 .. 100.0 V; 0	10.0 V	Uph-e<< Pickup
3755	T Uph-e<<	Voltage Prot.		0.00 .. 100.00 sec; ∞	1.00 sec	T Uph-e<< Time Delay
3758	CURR.SUP. Uphe<	Voltage Prot.		ON OFF	ON	Current supervision (Uph-e)
3759A	Uph-e<(<) RESET	Voltage Prot.		1.01 .. 1.20	1.05	Uph-e<(<) Reset ratio
3761	Uph-ph<(<)	Voltage Prot.		OFF Alarm Only ON U<Alarm U<<Trip	OFF	Operating mode Uph-ph undervoltage prot.
3762	Uph-ph<	Voltage Prot.		1.0 .. 175.0 V; 0	50.0 V	Uph-ph< Pickup
3763	T Uph-ph<	Voltage Prot.		0.00 .. 100.00 sec; ∞	2.00 sec	T Uph-ph< Time Delay
3764	Uph-ph<<	Voltage Prot.		1.0 .. 175.0 V; 0	17.0 V	Uph-ph<< Pickup
3765	T Uphph<<	Voltage Prot.		0.00 .. 100.00 sec; ∞	1.00 sec	T Uph-ph<< Time Delay
3768	CURR.SUP.Uphph<	Voltage Prot.		ON OFF	ON	Current supervision (Uph-ph)
3769A	Uphph<(<) RESET	Voltage Prot.		1.01 .. 1.20	1.05	Uph-ph<(<) Reset ratio
3771	U1<(<)	Voltage Prot.		OFF Alarm Only ON U<Alarm U<<Trip	OFF	Operating mode U1 undervoltage prot.
3772	U1<	Voltage Prot.		1.0 .. 100.0 V; 0	30.0 V	U1< Pickup
3773	T U1<	Voltage Prot.		0.00 .. 100.00 sec; ∞	2.00 sec	T U1< Time Delay
3774	U1<<	Voltage Prot.		1.0 .. 100.0 V; 0	10.0 V	U1<< Pickup
3775	T U1<<	Voltage Prot.		0.00 .. 100.00 sec; ∞	1.00 sec	T U1<< Time Delay
3778	CURR.SUP.U1<	Voltage Prot.		ON OFF	ON	Current supervision (U1)
3779A	U1<(<) RESET	Voltage Prot.		1.01 .. 1.20	1.05	U1<(<) Reset ratio
3802	START	Fault Locator		Pickup TRIP	Pickup	Start fault locator with
3805	Paral.Line Comp	Fault Locator		NO YES	YES	Mutual coupling parall.line compensation
3806	Load Compensat.	Fault Locator		NO YES	NO	Load Compensation
3811	Tmax OUTPUT BCD	Fault Locator		0.10 .. 180.00 sec	0.30 sec	Maximum output time via BCD
3901	FCT BreakerFail	Breaker Failure		ON OFF	ON	Breaker Failure Protection
3902	I> BF	Breaker Failure	1A	0.05 .. 20.00 A	0.10 A	Pick-up threshold I>
			5A	0.25 .. 100.00 A	0.50 A	
3903	1p-RETRIP (T1)	Breaker Failure		NO YES	YES	1pole retrip with stage T1 (local trip)
3904	T1-1pole	Breaker Failure		0.00 .. 30.00 sec; ∞	0.00 sec	T1, Delay after 1pole start (local trip)
3905	T1-3pole	Breaker Failure		0.00 .. 30.00 sec; ∞	0.00 sec	T1, Delay after 3pole start (local trip)
3906	T2	Breaker Failure		0.00 .. 30.00 sec; ∞	0.15 sec	T2, Delay of 2nd stage (busbar trip)
3907	T3-BkrDefective	Breaker Failure		0.00 .. 30.00 sec; ∞	0.00 sec	T3, Delay for start with defective bkr.
3908	Trip BkrDefect.	Breaker Failure		NO with T1-trip with T2-trip w/ T1/T2-trip	NO	Trip output selection with defective bkr
3909	Chk BRK CONTACT	Breaker Failure		NO YES	YES	Check Breaker contacts

Addr.	Parameter	Function	C	Setting Options	Default Setting	Comments
3912	3I0> BF	Breaker Failure	1A	0.05 .. 20.00 A	0.10 A	Pick-up threshold 3I0>
			5A	0.25 .. 100.00 A	0.50 A	
3913	T2StartCriteria	Breaker Failure		With exp. of T1 Parallel withT1	Parallel withT1	T2 Start Criteria
3921	End Flt. stage	Breaker Failure		ON OFF	OFF	End fault protection
3922	T-EndFault	Breaker Failure		0.00 .. 30.00 sec; ∞	2.00 sec	Trip delay of end fault protection
3931	PoleDiscrepancy	Breaker Failure		ON OFF	OFF	Pole Discrepancy supervision
3932	T-PoleDiscrep.	Breaker Failure		0.00 .. 30.00 sec; ∞	2.00 sec	Trip delay with pole discrepancy
4001	FCT TripSuperv.	TripCirc.Superv		ON OFF	OFF	TRIP Circuit Supervision is
4002	No. of BI	TripCirc.Superv		1 .. 2	2	Number of Binary Inputs per trip circuit
4003	Alarm Delay	TripCirc.Superv		1 .. 30 sec	2 sec	Delay Time for alarm
4501	STATE PROT I 1	Prot. Interface		ON OFF	ON	State of protection interface 1
4502	CONNEC. 1 OVER	Prot. Interface		F.optic direct Com conv 64 kB Com conv 128 kB Com conv 512 kB C37.94 1 slot C37.94 2 slots C37.94 4 slots C37.94 8 slots	F.optic direct	Connection 1 over
4505A	PROT 1 T-DELAY	Prot. Interface		0.1 .. 30.0 ms	30.0 ms	Prot 1: Maximal permissible delay time
4509	T-DATA DISTURB	Prot. Interface		0.05 .. 2.00 sec	0.10 sec	Time delay for data disturbance alarm
4510	T-DATAFAIL	Prot. Interface		0.0 .. 60.0 sec	6.0 sec	Time del for transmission failure alarm
4511	Td ResetRemote	Prot. Interface		0.00 .. 300.00 sec; ∞	0.00 sec	Remote signal RESET DELAY for comm.fail
4601	STATE PROT I 2	Prot. Interface		ON OFF	ON	State of protection interface 2
4602	CONNEC. 2 OVER	Prot. Interface		F.optic direct Com conv 64 kB Com conv 128 kB Com conv 512 kB C37.94 1 slot C37.94 2 slots C37.94 4 slots C37.94 8 slots	F.optic direct	Connection 2 over
4605A	PROT 2 T-DELAY	Prot. Interface		0.1 .. 30.0 ms	30.0 ms	Prot 2: Maximal permissible delay time
4701	ID OF RELAY 1	Prot. Interface		1 .. 65534	1	Identification number of relay 1
4702	ID OF RELAY 2	Prot. Interface		1 .. 65534	2	Identification number of relay 2
4703	ID OF RELAY 3	Prot. Interface		1 .. 65534	3	Identification number of relay 3
4710	LOCAL RELAY	Prot. Interface		relay 1 relay 2 relay 3	relay 1	Local relay is

A.8 Information List

Indications for IEC 60 870-5-103 are always reported ON / OFF if they are subject to general interrogation for IEC 60 870-5-103. If not, they are reported only as ON.

New user-defined indications or such newly allocated to IEC 60 870-5-103 are set to ON / OFF and subjected to general interrogation if the information type is not a spontaneous event („..._Ev“). Further information on indications can be found in detail in the SIPROTEC 4 System Description, Order No. E50417-H1100-C151.

In columns „Event Log“, „Trip Log“ and „Ground Fault Log“ the following applies:

UPPER CASE NOTATION “ON/OFF”: definitely set, not allocatable

lower case notation “on/off”: preset, allocatable

*: not preset, allocatable

<blank>: neither preset nor allocatable

In column „Marked in Oscill.Record“ the following applies:

UPPER CASE NOTATION “M”: definitely set, not allocatable

lower case notation “m”: preset, allocatable

*: not preset, allocatable

<blank>: neither preset nor allocatable

No.	Description	Function	Type of Information	Log Buffers				Configurable in Matrix					IEC 60870-5-103			
				Event Log ON/OFF	Trip (Fault) Log On/Off	Ground Fault Log ON/OFF	Marked in Oscill. Record	LED	Binary Input	Function Key	Relay	Chatter Suppression	Type	Information Number	Data Unit	General Interrogation
-	Test mode (Test mode)	Device	IntSP	ON OFF	*		*	LED			BO		128	21	1	Yes
-	Stop data transmission (DataStop)	Device	IntSP	ON OFF	*		*	LED			BO		128	20	1	Yes
-	Reset LED (Reset LED)	Device	IntSP	ON	*		*	LED			BO		128	19	1	No
-	Clock Synchronization (SynchClock)	Device	IntSP_Ev	*	*		*	LED			BO					
-	>Back Light on (>Light on)	Device	SP	ON OFF	*		*		BI							
-	Hardware Test Mode (HWTestMod)	Device	IntSP	ON OFF	*		*	LED			BO					
-	Error FMS FO 1 (Error FMS1)	Device	OUT	ON OFF	*	*	*	LED			BO					
-	Error FMS FO 2 (Error FMS2)	Device	OUT	ON OFF	*	*	*	LED			BO					
-	Disturbance CFC (Distur.CFC)	Device	OUT	on off	*			LED			BO					
-	Breaker OPENED (Brk OPENED)	Device	IntSP	*	*		*	LED			BO					
-	Feeder EARTHED (FdrEARTHED)	Device	IntSP	*	*		*	LED			BO					
-	Setting Group A is active (P-GrpA act)	Change Group	IntSP	ON OFF	*		*	LED			BO		128	23	1	Yes
-	Setting Group B is active (P-GrpB act)	Change Group	IntSP	ON OFF	*		*	LED			BO		128	24	1	Yes
-	Setting Group C is active (P-GrpC act)	Change Group	IntSP	ON OFF	*		*	LED			BO		128	25	1	Yes

No.	Description	Function	Type of Information	Log Buffers				Configurable in Matrix					IEC 60870-5-103			
				Event Log ON/OFF	Trip (Fault) Log On/Off	Ground Fault Log ON/OFF	Marked in Oscill. Record	LED	Binary Input	Function Key	Relay	Chatter Suppression	Type	Information Number	Data Unit	General Interrogation
-	Setting Group D is active (P-GrpD act)	Change Group	IntSP	ON OFF	*		*	LED			BO		128	26	1	Yes
-	Fault Recording Start (FltRecSta)	Osc. Fault Rec.	IntSP	on off	*		m	LED			BO					
-	Reset Minimum and Maximum counter (ResMinMax)	Min/Max meter	IntSP_Ev	ON	*											
-	CB1-TEST trip/close - Only L1 (CB1tst L1)	Testing	-	*	*											
-	CB1-TEST trip/close - Only L2 (CB1tst L2)	Testing	-	*	*											
-	CB1-TEST trip/close - Only L3 (CB1tst L3)	Testing	-	*	*											
-	CB1-TEST trip/close Phases L123 (CB1tst 123)	Testing	-	*	*											
-	Controlmode REMOTE (ModeREMOTE)	Cntrl Authority	IntSP	on off	*			LED			BO					
-	Control Authority (Cntrl Auth)	Cntrl Authority	IntSP	on off	*			LED			BO		101	85	1	Yes
-	Controlmode LOCAL (ModeLOCAL)	Cntrl Authority	IntSP	on off	*			LED			BO		101	86	1	Yes
-	Breaker (Breaker)	Control Device	CF_D12	on off	*						BO		240	160	20	
-	Breaker (Breaker)	Control Device	DP	on off	*				BI			CB	240	160	1	Yes
-	Disconnect Switch (Disc.Swit.)	Control Device	CF_D2	on off	*						BO		240	161	20	
-	Disconnect Switch (Disc.Swit.)	Control Device	DP	on off	*				BI			CB	240	161	1	Yes
-	Earth Switch (EarthSwit)	Control Device	CF_D2	on off	*						BO		240	164	20	
-	Earth Switch (EarthSwit)	Control Device	DP	on off	*				BI			CB	240	164	1	Yes
-	Interlocking: Breaker Open (Brk Open)	Control Device	IntSP	*	*		*									
-	Interlocking: Breaker Close (Brk Close)	Control Device	IntSP	*	*		*									
-	Interlocking: Disconnect switch Open (Disc.Open)	Control Device	IntSP	*	*		*									
-	Interlocking: Disconnect switch Close (Disc.Close)	Control Device	IntSP	*	*		*									
-	Interlocking: Earth switch Open (E Sw Open)	Control Device	IntSP	*	*		*									
-	Interlocking: Earth switch Close (E Sw Cl.)	Control Device	IntSP	*	*		*									
-	Q2 Open/Close (Q2 Op/Cl)	Control Device	CF_D2	on off	*						BO		240	162	20	
-	Q2 Open/Close (Q2 Op/Cl)	Control Device	DP	on off	*				BI			CB	240	162	1	Yes
-	Q9 Open/Close (Q9 Op/Cl)	Control Device	CF_D2	on off	*						BO		240	163	20	
-	Q9 Open/Close (Q9 Op/Cl)	Control Device	DP	on off	*				BI			CB	240	163	1	Yes
-	Fan ON/OFF (Fan ON/OFF)	Control Device	CF_D2	on off	*						BO		240	175	20	
-	Fan ON/OFF (Fan ON/OFF)	Control Device	DP	on off	*				BI			CB	240	175	1	Yes

No.	Description	Function	Type of Information	Log Buffers				Configurable in Matrix					IEC 60870-5-103			
				Event Log ON/OFF	Trip (Fault) Log On/Off	Ground Fault Log ON/OFF	Marked in Oscill. Record	LED	Binary Input	Function Key	Relay	Chatter Suppression	Type	Information Number	Data Unit	General Interrogation
-	Unlock data transmission via BI (UnlockDT)	Control Device	IntSP	*	*		*									
-	>Cabinet door open (>Door open)	Process Data	SP	on off	*		*	LED	BI		BO	CB	101	1	1	Yes
-	>CB waiting for Spring charged (>CB wait)	Process Data	SP	on off	*		*	LED	BI		BO	CB	101	2	1	Yes
-	>Error Motor Voltage (>Err Mot U)	Process Data	SP	on off	*		*	LED	BI		BO	CB	240	181	1	Yes
-	>Error Control Voltage (>ErrCntr-lU)	Process Data	SP	on off	*		*	LED	BI		BO	CB	240	182	1	Yes
-	>SF6-Loss (>SF6-Loss)	Process Data	SP	on off	*		*	LED	BI		BO	CB	240	183	1	Yes
-	>Error Meter (>Err Meter)	Process Data	SP	on off	*		*	LED	BI		BO	CB	240	184	1	Yes
-	>Transformer Temperature (>Tx Temp.)	Process Data	SP	on off	*		*	LED	BI		BO	CB	240	185	1	Yes
-	>Transformer Danger (>Tx Danger)	Process Data	SP	on off	*		*	LED	BI		BO	CB	240	186	1	Yes
-	Reset meter (Meter res)	Energy	IntSP_Ev	ON	*											
-	Error Systeminterface (SysIn-tErr.)	Protocol	IntSP	on off	*			LED			BO					
-	Threshold Value 1 (ThreshVal1)	Thresh.-Switch	IntSP	ON OFF	*		*	LED	BI	FC TN	BO	CB				
1	No Function configured (Not con-figured)	Device	SP													
2	Function Not Available (Non Exis-tent)	Device	SP													
3	>Synchronize Internal Real Time Clock (>Time Synch)	Device	SP	*	*		*	LED	BI		BO					
4	>Trigger Waveform Capture (>Trig.Wave.Cap.)	Osc. Fault Rec.	SP	on	*		m	LED	BI		BO					
5	>Reset LED (>Reset LED)	Device	SP	*	*		*	LED	BI		BO					
7	>Setting Group Select Bit 0 (>Set Group Bit0)	Change Group	SP	*	*		*	LED	BI		BO					
8	>Setting Group Select Bit 1 (>Set Group Bit1)	Change Group	SP	*	*		*	LED	BI		BO					
009.0100	Failure EN100 Modul (Failure Modul)	EN100-Modul 1	IntSP	on off			*	LED			BO					
009.0101	Failure EN100 Link Channel 1 (Ch1) (Fail Ch1)	EN100-Modul 1	IntSP	on off			*	LED			BO					
009.0102	Failure EN100 Link Channel 2 (Ch2) (Fail Ch2)	EN100-Modul 1	IntSP	on off			*	LED			BO					
11	>User defined annunciation 1 (>Annunc. 1)	Device	SP	*	*	*	*	LED	BI		BO		128	27	1	Yes
12	>User defined annunciation 2 (>Annunc. 2)	Device	SP	*	*	*	*	LED	BI		BO		128	28	1	Yes
13	>User defined annunciation 3 (>Annunc. 3)	Device	SP	*	*	*	*	LED	BI		BO		128	29	1	Yes
14	>User defined annunciation 4 (>Annunc. 4)	Device	SP	*	*	*	*	LED	BI		BO		128	30	1	Yes
15	>Test mode (>Test mode)	Device	SP	ON OFF	*		*	LED	BI		BO		135	53	1	Yes
16	>Stop data transmission (>DataStop)	Device	SP	*	*		*	LED	BI		BO		135	54	1	Yes

No.	Description	Function	Type of Information	Log Buffers				Configurable in Matrix					IEC 60870-5-103			
				Event Log ON/OFF	Trip (Fault) Log On/Off	Ground Fault Log ON/OFF	Marked in Oscill. Record	LED	Binary Input	Function Key	Relay	Chatter Suppression	Type	Information Number	Data Unit	General Interrogation
51	Device is Operational and Protecting (Device OK)	Device	OUT	ON OFF	*		*	LED			BO		135	81	1	Yes
52	At Least 1 Protection Funct. is Active (ProtActive)	Device	IntSP	ON OFF	*		*	LED			BO		128	18	1	Yes
55	Reset Device (Reset Device)	Device	OUT	*	*		*	LED			BO		128	4	1	No
56	Initial Start of Device (Initial Start)	Device	OUT	ON	*		*	LED			BO		128	5	1	No
67	Resume (Resume)	Device	OUT	ON	*		*	LED			BO		135	97	1	No
68	Clock Synchronization Error (Clock SyncError)	Device	OUT	on off	*		*	LED			BO					
69	Daylight Saving Time (DayLightSavTime)	Device	OUT	ON OFF	*		*	LED			BO					
70	Setting calculation is running (Settings Calc.)	Device	OUT	ON OFF	*		*	LED			BO		128	22	1	Yes
71	Settings Check (Settings Check)	Device	OUT	*	*		*	LED			BO					
72	Level-2 change (Level-2 change)	Device	OUT	ON OFF	*		*	LED			BO					
73	Local setting change (Local change)	Device	OUT	*	*		*									
110	Event lost (Event Lost)	Device	OUT_Ev	ON	*		*	LED			BO		135	130	1	No
113	Flag Lost (Flag Lost)	Device	OUT	ON	*		m	LED			BO		135	136	1	Yes
125	Chatter ON (Chatter ON)	Device	OUT	ON OFF	*		*	LED			BO		135	145	1	Yes
126	Protection ON/OFF (via system port) (ProtON/OFF)	Device	IntSP	ON OFF	*		*	LED			BO					
127	Auto Reclose ON/OFF (via system port) (AR ON/OFF)	Device	IntSP	ON OFF	*		*	LED			BO					
128	Teleprot. ON/OFF (via system port) (TelepONoff)	Device	IntSP	ON OFF	*		*	LED			BO					
130	Load angle Phi(PQ Positive sequence) (φ(PQ Pos. Seq.))	Measurem.Superv	OUT	*	*		*	LED			BO					
131	Load angle Phi(PQ) blocked (φ(PQ Pos) block)	Measurem.Superv	OUT	*	*		*	LED			BO					
132	Setting error: |PhiA - PhiB| < 3° (φ Set wrong)	Measurem.Superv	OUT	*	*		*	LED			BO					
140	Error with a summary alarm (Error Sum Alarm)	Device	OUT	ON OFF	*		*	LED			BO		128	47	1	Yes
144	Error 5V (Error 5V)	Device	OUT	ON OFF	*		*	LED			BO		135	164	1	Yes
160	Alarm Summary Event (Alarm Sum Event)	Device	OUT	*	*		*	LED			BO		128	46	1	Yes
161	Failure: General Current Supervision (Fail I Superv.)	Measurem.Superv	OUT	*	*		*	LED			BO		128	32	1	Yes
162	Failure: Current Summation (Failure Σ I)	Measurem.Superv	OUT	ON OFF	*		*	LED			BO		135	182	1	Yes
163	Failure: Current Balance (Fail I balance)	Measurem.Superv	OUT	ON OFF	*		*	LED			BO		135	183	1	Yes
164	Failure: General Voltage Supervision (Fail U Superv.)	Measurem.Superv	OUT	*	*		*	LED			BO		128	33	1	Yes
165	Failure: Voltage summation Phase-Earth (Fail Σ U Ph-E)	Measurem.Superv	OUT	ON OFF	*		*	LED			BO		135	184	1	Yes
167	Failure: Voltage Balance (Fail U balance)	Measurem.Superv	OUT	ON OFF	*		*	LED			BO		135	186	1	Yes
168	Failure: Voltage absent (Fail U absent)	Measurem.Superv	OUT	ON OFF	*		*	LED			BO		135	187	1	Yes

No.	Description	Function	Type of Information	Log Buffers				Configurable in Matrix					IEC 60870-5-103			
				Event Log ON/OFF	Trip (Fault) Log On/Off	Ground Fault Log ON/OFF	Marked in Oscill. Record	LED	Binary Input	Function Key	Relay	Chatter Suppression	Type	Information Number	Data Unit	General Interrogation
169	VT Fuse Failure (alarm >10s) (VT FuseFail>10s)	Measurem.Superv	OUT	ON OFF	*		*	LED			BO		135	188	1	Yes
170	VT Fuse Failure (alarm instantaneous) (VT FuseFail)	Measurem.Superv	OUT	ON OFF	*		*	LED			BO					
171	Failure: Phase Sequence (Fail Ph. Seq.)	Measurem.Superv	OUT	ON OFF	*		*	LED			BO		128	35	1	Yes
177	Failure: Battery empty (Fail Battery)	Device	OUT	ON OFF	*		*	LED			BO		135	193	1	Yes
181	Error: A/D converter (Error A/D-conv.)	Device	OUT	ON OFF	*		*	LED			BO		135	178	1	Yes
183	Error Board 1 (Error Board 1)	Device	OUT	ON OFF	*		*	LED			BO		135	171	1	Yes
184	Error Board 2 (Error Board 2)	Device	OUT	ON OFF	*		*	LED			BO		135	172	1	Yes
185	Error Board 3 (Error Board 3)	Device	OUT	ON OFF	*		*	LED			BO		135	173	1	Yes
186	Error Board 4 (Error Board 4)	Device	OUT	ON OFF	*		*	LED			BO		135	174	1	Yes
187	Error Board 5 (Error Board 5)	Device	OUT	ON OFF	*		*	LED			BO		135	175	1	Yes
188	Error Board 6 (Error Board 6)	Device	OUT	ON OFF	*		*	LED			BO		135	176	1	Yes
189	Error Board 7 (Error Board 7)	Device	OUT	ON OFF	*		*	LED			BO		135	177	1	Yes
190	Error Board 0 (Error Board 0)	Device	OUT	ON OFF	*		*	LED			BO		135	210	1	Yes
191	Error: Offset (Error Offset)	Device	OUT	ON OFF	*		*	LED			BO		135	211	1	Yes
192	Error:1A/5Ajumper different from setting (Error1A/5Awrong)	Device	OUT	ON OFF	*		*	LED			BO		135	169	1	Yes
193	Alarm: Analog input adjustment invalid (Alarm adjustm.)	Device	OUT	ON OFF	*		*	LED			BO		135	181	1	Yes
194	Error: Neutral CT different from MLFB (Error neutralCT)	Device	OUT	ON OFF	*		*	LED			BO		135	180	1	Yes
195	Failure: Broken Conductor (Fail Conductor)	Measurem.Superv	OUT	ON OFF	*		*	LED			BO		135	195	1	Yes
196	Fuse Fail Monitor is switched OFF (Fuse Fail M.OFF)	Measurem.Superv	OUT	ON OFF	*		*	LED			BO		135	196	1	Yes
197	Measurement Supervision is switched OFF (MeasSup OFF)	Measurem.Superv	OUT	ON OFF	*		*	LED			BO		135	197	1	Yes
234.2100	U<, U> blocked via operation (U<, U> blk)	Voltage Prot.	IntSP	on off	*		*	LED			BO					
273	Set Point Phase L1 dmd> (SP. IL1 dmd>)	Set Points(MV)	OUT	on off	*		*	LED			BO		135	230	1	Yes
274	Set Point Phase L2 dmd> (SP. IL2 dmd>)	Set Points(MV)	OUT	on off	*		*	LED			BO		135	234	1	Yes
275	Set Point Phase L3 dmd> (SP. IL3 dmd>)	Set Points(MV)	OUT	on off	*		*	LED			BO		135	235	1	Yes
276	Set Point positive sequence I1dmd> (SP. I1dmd>)	Set Points(MV)	OUT	on off	*		*	LED			BO		135	236	1	Yes
277	Set Point |Pdmd|> (SP. |Pdmd|>)	Set Points(MV)	OUT	on off	*		*	LED			BO		135	237	1	Yes
278	Set Point |Qdmd|> (SP. |Qdmd|>)	Set Points(MV)	OUT	on off	*		*	LED			BO		135	238	1	Yes
279	Set Point |Sdmd|> (SP. |Sdmd|>)	Set Points(MV)	OUT	on off	*		*	LED			BO		135	239	1	Yes

No.	Description	Function	Type of In-for-matio n	Log Buffers				Configurable in Matrix					IEC 60870-5-103			
				Event Log ON/OFF	Trip (Fault) Log On/Off	Ground Fault Log ON/OFF	Marked in Oscill. Record	LED	Binary Input	Function Key	Relay	Chatter Suppression	Type	Information Number	Data Unit	General Interrogation
285	Power factor alarm (cosφ alarm)	Set Points(MV)	OUT	on off	*		*	LED			BO		135	245	1	Yes
301	Power System fault (Pow.Sys.Flt.)	P.System Data 2	OUT	ON OFF	ON		*						135	231	2	Yes
302	Fault Event (Fault Event)	P.System Data 2	OUT	*	ON		*						135	232	2	No
303	E/Flt.det. in isol/comp.netw. (E/F Det.)	P.System Data 2	OUT	ON OFF	*	ON	*						135	233	1	No
320	Warn: Limit of Memory Data exceeded (Warn Mem. Data)	Device	OUT	on off	*		*	LED			BO					
321	Warn: Limit of Memory Parameter exceeded (Warn Mem. Para.)	Device	OUT	on off	*		*	LED			BO					
322	Warn: Limit of Memory Operation exceeded (Warn Mem. Oper.)	Device	OUT	on off	*		*	LED			BO					
323	Warn: Limit of Memory New exceeded (Warn Mem. New)	Device	OUT	on off	*		*	LED			BO					
351	>Circuit breaker aux. contact: Pole L1 (>CB Aux. L1)	P.System Data 2	SP	*	*		*	LED	BI		BO		150	1	1	Yes
352	>Circuit breaker aux. contact: Pole L2 (>CB Aux. L2)	P.System Data 2	SP	*	*		*	LED	BI		BO		150	2	1	Yes
353	>Circuit breaker aux. contact: Pole L3 (>CB Aux. L3)	P.System Data 2	SP	*	*		*	LED	BI		BO		150	3	1	Yes
356	>Manual close signal (>Manual Close)	P.System Data 2	SP	*	*		*	LED	BI		BO		150	6	1	Yes
357	>Block manual close cmd. from external (>Blk Man. Close)	P.System Data 2	SP	ON OFF	*		*	LED	BI		BO		150	7	1	Yes
361	>Failure: Feeder VT (MCB tripped) (>FAIL:Feeder VT)	P.System Data 2	SP	ON OFF	*		*	LED	BI		BO		128	38	1	Yes
362	>Failure: Usy4 VT (MCB tripped) (>FAIL:U4 VT)	P.System Data 2	SP	ON OFF	*		*	LED	BI		BO		150	12	1	Yes
366	>CB1 Pole L1 (for AR,CB-Test) (>CB1 Pole L1)	P.System Data 2	SP	*	*		*	LED	BI		BO		150	66	1	Yes
367	>CB1 Pole L2 (for AR,CB-Test) (>CB1 Pole L2)	P.System Data 2	SP	*	*		*	LED	BI		BO		150	67	1	Yes
368	>CB1 Pole L3 (for AR,CB-Test) (>CB1 Pole L3)	P.System Data 2	SP	*	*		*	LED	BI		BO		150	68	1	Yes
371	>CB1 READY (for AR,CB-Test) (>CB1 Ready)	P.System Data 2	SP	*	*		*	LED	BI		BO		150	71	1	Yes
378	>CB faulty (>CB faulty)	P.System Data 2	SP	*	*		*	LED	BI		BO					
379	>CB aux. contact 3pole Closed (>CB 3p Closed)	P.System Data 2	SP	*	*		*	LED	BI		BO		150	78	1	Yes
380	>CB aux. contact 3pole Open (>CB 3p Open)	P.System Data 2	SP	*	*		*	LED	BI		BO		150	79	1	Yes
381	>Single-phase trip permitted from ext.AR (>1p Trip Perm)	P.System Data 2	SP	ON OFF	*		*	LED	BI		BO					
382	>External AR programmed for 1phase only (>Only 1ph AR)	P.System Data 2	SP	ON OFF	*		*	LED	BI		BO					
383	>Enable all AR Zones / Stages (>Enable ARzones)	P.System Data 2	SP	ON OFF	ON OFF		*	LED	BI		BO					
385	>Lockout SET (>Lockout SET)	P.System Data 2	SP	ON OFF	*		*	LED	BI		BO		150	35	1	Yes
386	>Lockout RESET (>Lockout RESET)	P.System Data 2	SP	ON OFF	*		*	LED	BI		BO		150	36	1	Yes
395	>I MIN/MAX Buffer Reset (>I MinMax Reset)	Min/Max meter	SP	ON	*		*	LED	BI		BO					
396	>I1 MIN/MAX Buffer Reset (>I1 MiMaReset)	Min/Max meter	SP	ON	*		*	LED	BI		BO					

No.	Description	Function	Type of In-for-matio n	Log Buffers				Configurable in Matrix					IEC 60870-5-103			
				Event Log ON/OFF	Trip (Fault) Log On/Off	Ground Fault Log ON/OFF	Marked in Oscill. Record	LED	Binary Input	Function Key	Relay	Chatter Suppression	Type	Information Number	Data Unit	General Interrogation
397	>U MIN/MAX Buffer Reset (>U MiMaReset)	Min/Max meter	SP	ON	*		*	LED	BI		BO					
398	>Uphph MIN/MAX Buffer Reset (>UphphMiMaRes)	Min/Max meter	SP	ON	*		*	LED	BI		BO					
399	>U1 MIN/MAX Buffer Reset (>U1 MiMa Reset)	Min/Max meter	SP	ON	*		*	LED	BI		BO					
400	>P MIN/MAX Buffer Reset (>P MiMa Reset)	Min/Max meter	SP	ON	*		*	LED	BI		BO					
401	>S MIN/MAX Buffer Reset (>S MiMa Reset)	Min/Max meter	SP	ON	*		*	LED	BI		BO					
402	>Q MIN/MAX Buffer Reset (>Q MiMa Reset)	Min/Max meter	SP	ON	*		*	LED	BI		BO					
403	>Idmd MIN/MAX Buffer Reset (>Idmd MiMaReset)	Min/Max meter	SP	ON	*		*	LED	BI		BO					
404	>Pdmd MIN/MAX Buffer Reset (>Pdmd MiMaReset)	Min/Max meter	SP	ON	*		*	LED	BI		BO					
405	>Qdmd MIN/MAX Buffer Reset (>Qdmd MiMaReset)	Min/Max meter	SP	ON	*		*	LED	BI		BO					
406	>Sdmd MIN/MAX Buffer Reset (>Sdmd MiMaReset)	Min/Max meter	SP	ON	*		*	LED	BI		BO					
407	>Frq. MIN/MAX Buffer Reset (>Frq MiMa Reset)	Min/Max meter	SP	ON	*		*	LED	BI		BO					
408	>Power Factor MIN/MAX Buffer Reset (>PF MiMaReset)	Min/Max meter	SP	ON	*		*	LED	BI		BO					
410	>CB1 aux. 3p Closed (for AR, CB-Test) (>CB1 3p Closed)	P.System Data 2	SP	*	*		*	LED	BI		BO		150	80	1	Yes
411	>CB1 aux. 3p Open (for AR, CB-Test) (>CB1 3p Open)	P.System Data 2	SP	*	*		*	LED	BI		BO		150	81	1	Yes
501	Relay PICKUP (Relay PICKUP)	P.System Data 2	OUT	*	*		m	LED			BO		128	84	2	Yes
503	Relay PICKUP Phase L1 (Relay PICKUP L1)	P.System Data 2	OUT	*	*		m	LED			BO		128	64	2	Yes
504	Relay PICKUP Phase L2 (Relay PICKUP L2)	P.System Data 2	OUT	*	*		m	LED			BO		128	65	2	Yes
505	Relay PICKUP Phase L3 (Relay PICKUP L3)	P.System Data 2	OUT	*	*		m	LED			BO		128	66	2	Yes
506	Relay PICKUP Earth (Relay PICKUP E)	P.System Data 2	OUT	*	*		m	LED			BO		128	67	2	Yes
507	Relay TRIP command Phase L1 (Relay TRIP L1)	P.System Data 2	OUT	*	*		m	LED			BO		128	69	2	No
508	Relay TRIP command Phase L2 (Relay TRIP L2)	P.System Data 2	OUT	*	*		m	LED			BO		128	70	2	No
509	Relay TRIP command Phase L3 (Relay TRIP L3)	P.System Data 2	OUT	*	*		m	LED			BO		128	71	2	No
510	Relay GENERAL CLOSE command (Relay CLOSE)	P.System Data 2	OUT	*	*	*	*	LED			BO					
511	Relay GENERAL TRIP command (Relay TRIP)	P.System Data 2	OUT	*	OFF		m	LED			BO		128	68	2	No
512	Relay TRIP command - Only Phase L1 (Relay TRIP 1pL1)	P.System Data 2	OUT	*	*		*	LED			BO					
513	Relay TRIP command - Only Phase L2 (Relay TRIP 1pL2)	P.System Data 2	OUT	*	*		*	LED			BO					
514	Relay TRIP command - Only Phase L3 (Relay TRIP 1pL3)	P.System Data 2	OUT	*	*		*	LED			BO					
515	Relay TRIP command Phases L123 (Relay TRIP 3ph.)	P.System Data 2	OUT	*	*		*	LED			BO					

No.	Description	Function	Type of Information	Log Buffers				Configurable in Matrix					IEC 60870-5-103			
				Event Log ON/OFF	Trip (Fault) Log On/Off	Ground Fault Log ON/OFF	Marked in Oscill. Record	LED	Binary Input	Function Key	Relay	Chatter Suppression	Type	Information Number	Data Unit	General Interrogation
530	LOCKOUT is active (LOCKOUT)	P.System Data 2	IntSP	ON OFF	ON OFF		*	LED			BO		150	170	1	Yes
533	Primary fault current IL1 (IL1 =)	P.System Data 2	VI	*	ON OFF								150	177	4	No
534	Primary fault current IL2 (IL2 =)	P.System Data 2	VI	*	ON OFF								150	178	4	No
535	Primary fault current IL3 (IL3 =)	P.System Data 2	VI	*	ON OFF								150	179	4	No
536	Relay Definitive TRIP (Definitive TRIP)	P.System Data 2	OUT	ON	ON	*	*	LED			BO		150	180	2	No
545	Time from Pickup to drop out (PU Time)	P.System Data 2	VI													
546	Time from Pickup to TRIP (TRIP Time)	P.System Data 2	VI													
560	Single-phase trip was coupled 3phase (Trip Coupled 3p)	P.System Data 2	OUT	*	ON		*	LED			BO		150	210	2	No
561	Manual close signal detected (Man.Clos.Detect)	P.System Data 2	OUT	ON	*		*	LED			BO		150	211	1	No
562	CB CLOSE command for manual closing (Man.Close Cmd)	P.System Data 2	OUT	*	*		*	LED			BO		150	212	1	No
563	CB alarm suppressed (CB Alarm Supp)	P.System Data 2	OUT	*	*	*		LED			BO					
590	Line closure detected (Line closure)	P.System Data 2	OUT	ON OFF	ON OFF		m	LED			BO					
591	Single pole open detected in L1 (1pole open L1)	P.System Data 2	OUT	ON OFF	ON OFF		m	LED			BO					
592	Single pole open detected in L2 (1pole open L2)	P.System Data 2	OUT	ON OFF	ON OFF		m	LED			BO					
593	Single pole open detected in L3 (1pole open L3)	P.System Data 2	OUT	ON OFF	ON OFF		m	LED			BO					
1000	Number of breaker TRIP commands (# TRIPs=)	Statistics	VI													
1001	Number of breaker TRIP commands L1 (TripNo L1=)	Statistics	VI													
1002	Number of breaker TRIP commands L2 (TripNo L2=)	Statistics	VI													
1003	Number of breaker TRIP commands L3 (TripNo L3=)	Statistics	VI													
1027	Accumulation of interrupted current L1 (Σ IL1 =)	Statistics	VI													
1028	Accumulation of interrupted current L2 (Σ IL2 =)	Statistics	VI													
1029	Accumulation of interrupted current L3 (Σ IL3 =)	Statistics	VI													
1030	Max. fault current Phase L1 (Max IL1 =)	Statistics	VI													
1031	Max. fault current Phase L2 (Max IL2 =)	Statistics	VI													
1032	Max. fault current Phase L3 (Max IL3 =)	Statistics	VI													
1114	Flt Locator: primary RESISTANCE (Rpri =)	Fault Locator	VI		ON OFF								151	14	4	No
1115	Flt Locator: primary REACTANCE (Xpri =)	Fault Locator	VI		ON OFF								128	73	4	No
1117	Flt Locator: secondary RESISTANCE (Rsec =)	Fault Locator	VI		ON OFF								151	17	4	No

No.	Description	Function	Type of In-for-matio n	Log Buffers				Configurable in Matrix					IEC 60870-5-103			
				Event Log ON/OFF	Trip (Fault) Log On/Off	Ground Fault Log ON/OFF	Marked in Oscill. Record	LED	Binary Input	Function Key	Relay	Chatter Suppression	Type	Information Number	Data Unit	General Interrogation
1118	Flt Locator: secondary REAC-TANCE (Xsec =)	Fault Locator	VI		ON OFF								151	18	4	No
1119	Flt Locator: Distance to fault (dist =)	Fault Locator	VI		ON OFF								151	19	4	No
1120	Flt Locator: Distance [%] to fault (d[%] =)	Fault Locator	VI		ON OFF								151	20	4	No
1122	Flt Locator: Distance to fault (dist =)	Fault Locator	VI		ON OFF								151	22	4	No
1123	Fault Locator Loop L1E (FL Loop L1E)	Fault Locator	OUT_ Ev		ON											
1124	Fault Locator Loop L2E (FL Loop L2E)	Fault Locator	OUT_ Ev		ON											
1125	Fault Locator Loop L3E (FL Loop L3E)	Fault Locator	OUT_ Ev		ON											
1126	Fault Locator Loop L1L2 (FL Loop L1L2)	Fault Locator	OUT_ Ev		ON											
1127	Fault Locator Loop L2L3 (FL Loop L2L3)	Fault Locator	OUT_ Ev		ON											
1128	Fault Locator Loop L3L1 (FL Loop L3L1)	Fault Locator	OUT_ Ev		ON											
1132	Fault location invalid (Flt.Loc.in-valid)	Fault Locator	OUT	*	ON		*	LED			BO					
1133	Fault locator setting error K0,an-gle(K0) (Flt.Loc.ErrorK0)	Fault Locator	OUT	*	ON		*	LED			BO					
1143	BCD Fault location [1%] (BCD d[1%])	Fault Locator	OUT	*	*		*	LED			BO					
1144	BCD Fault location [2%] (BCD d[2%])	Fault Locator	OUT	*	*		*	LED			BO					
1145	BCD Fault location [4%] (BCD d[4%])	Fault Locator	OUT	*	*		*	LED			BO					
1146	BCD Fault location [8%] (BCD d[8%])	Fault Locator	OUT	*	*		*	LED			BO					
1147	BCD Fault location [10%] (BCD d[10%])	Fault Locator	OUT	*	*		*	LED			BO					
1148	BCD Fault location [20%] (BCD d[20%])	Fault Locator	OUT	*	*		*	LED			BO					
1149	BCD Fault location [40%] (BCD d[40%])	Fault Locator	OUT	*	*		*	LED			BO					
1150	BCD Fault location [80%] (BCD d[80%])	Fault Locator	OUT	*	*		*	LED			BO					
1151	BCD Fault location [100%] (BCD d[100%])	Fault Locator	OUT	*	*		*	LED			BO					
1152	BCD Fault location valid (BCD dist. VALID)	Fault Locator	OUT	*	*		*	LED			BO					
1305	>Earth Fault O/C Block 3I0>>> (>EF BLK 3I0>>>)	Earth Fault O/C	SP	ON OFF	*		*	LED	BI		BO		166	5	1	Yes
1307	>Earth Fault O/C Block 3I0>> (>EF BLOCK 3I0>>)	Earth Fault O/C	SP	ON OFF	*		*	LED	BI		BO		166	7	1	Yes
1308	>Earth Fault O/C Block 3I0> (>EF BLOCK 3I0>)	Earth Fault O/C	SP	ON OFF	*		*	LED	BI		BO		166	8	1	Yes
1309	>Earth Fault O/C Block 3I0p (>EF BLOCK 3I0p)	Earth Fault O/C	SP	ON OFF	*		*	LED	BI		BO		166	9	1	Yes
1310	>Earth Fault O/C Instantaneous trip (>EF InstTRIP)	Earth Fault O/C	SP	ON OFF	ON OFF		*	LED	BI		BO		166	10	1	Yes
1311	>E/F Teleprotection ON (>EF Teleprot.ON)	Teleprot. E/F	SP	*	*		*	LED	BI		BO					

No.	Description	Function	Type of Information	Log Buffers				Configurable in Matrix					IEC 60870-5-103			
				Event Log ON/OFF	Trip (Fault) Log On/Off	Ground Fault Log ON/OFF	Marked in Oscill. Record	LED	Binary Input	Function Key	Relay	Chatter Suppression	Type	Information Number	Data Unit	General Interrogation
1312	>E/F Teleprotection OFF (>EF TeleprotOFF)	Teleprot. E/F	SP	*	*		*	LED	BI		BO					
1313	>E/F Teleprotection BLOCK (>EF TeleprotBLK)	Teleprot. E/F	SP	ON OFF	*		*	LED	BI		BO		166	13	1	Yes
1318	>E/F Carrier RECEPTION, Channel 1 (>EF Rec.Ch1)	Teleprot. E/F	SP	on off	on		*	LED	BI		BO		166	18	1	Yes
1319	>E/F Carrier RECEPTION, Channel 2 (>EF Rec.Ch2)	Teleprot. E/F	SP	on off	on		*	LED	BI		BO		166	19	1	Yes
1320	>E/F Unblocking: UNBLOCK, Channel 1 (>EF UB ub 1)	Teleprot. E/F	SP	ON OFF	ON		*	LED	BI		BO		166	20	1	Yes
1321	>E/F Unblocking: BLOCK, Channel 1 (>EF UB bl 1)	Teleprot. E/F	SP	ON OFF	ON		*	LED	BI		BO		166	21	1	Yes
1322	>E/F Unblocking: UNBLOCK, Channel 2 (>EF UB ub 2)	Teleprot. E/F	SP	ON OFF	ON		*	LED	BI		BO		166	22	1	Yes
1323	>E/F Unblocking: BLOCK, Channel 2 (>EF UB bl 2)	Teleprot. E/F	SP	ON OFF	ON		*	LED	BI		BO		166	23	1	Yes
1324	>E/F BLOCK Echo Signal (>EF BlkEcho)	Teleprot. E/F	SP	ON OFF	ON		*	LED	BI		BO		166	24	1	Yes
1325	>E/F Carrier RECEPTION, Channel 1, Ph.L1 (>EF Rec.Ch1 L1)	Teleprot. E/F	SP	on off	on		*	LED	BI		BO		166	25	1	Yes
1326	>E/F Carrier RECEPTION, Channel 1, Ph.L2 (>EF Rec.Ch1 L2)	Teleprot. E/F	SP	on off	on		*	LED	BI		BO		166	26	1	Yes
1327	>E/F Carrier RECEPTION, Channel 1, Ph.L3 (>EF Rec.Ch1 L3)	Teleprot. E/F	SP	on off	on		*	LED	BI		BO		166	27	1	Yes
1328	>E/F Unblocking: UNBLOCK Chan. 1, Ph.L1 (>EF UB ub 1-L1)	Teleprot. E/F	SP	ON OFF	ON		*	LED	BI		BO		166	28	1	Yes
1329	>E/F Unblocking: UNBLOCK Chan. 1, Ph.L2 (>EF UB ub 1-L2)	Teleprot. E/F	SP	ON OFF	ON		*	LED	BI		BO		166	29	1	Yes
1330	>E/F Unblocking: UNBLOCK Chan. 1, Ph.L3 (>EF UB ub 1-L3)	Teleprot. E/F	SP	ON OFF	ON		*	LED	BI		BO		166	30	1	Yes
1331	Earth fault protection is switched OFF (E/F Prot. OFF)	Earth Fault O/C	OUT	ON OFF	*		*	LED			BO		166	31	1	Yes
1332	Earth fault protection is BLOCKED (E/F BLOCK)	Earth Fault O/C	OUT	ON OFF	ON OFF		*	LED			BO		166	32	1	Yes
1333	Earth fault protection is ACTIVE (E/F ACTIVE)	Earth Fault O/C	OUT	*	*		*	LED			BO		166	33	1	Yes
1335	Earth fault protection Trip is blocked (EF TRIP BLOCK)	Earth Fault O/C	OUT	ON OFF	ON OFF		*	LED			BO					
1336	E/F phase selector L1 selected (E/F L1 selec.)	Earth Fault O/C	OUT	*	ON OFF		*	LED			BO					
1337	E/F phase selector L2 selected (E/F L2 selec.)	Earth Fault O/C	OUT	*	ON OFF		*	LED			BO					
1338	E/F phase selector L3 selected (E/F L3 selec.)	Earth Fault O/C	OUT	*	ON OFF		*	LED			BO					
1345	Earth fault protection PICKED UP (EF Pickup)	Earth Fault O/C	OUT	*	off		m	LED			BO		166	45	2	Yes
1354	E/F 3I0>>> PICKED UP (EF 3I0>>>Pickup)	Earth Fault O/C	OUT	*	ON		*	LED			BO					
1355	E/F 3I0>> PICKED UP (EF 3I0>> Pickup)	Earth Fault O/C	OUT	*	ON		*	LED			BO					
1356	E/F 3I0> PICKED UP (EF 3I0> Pickup)	Earth Fault O/C	OUT	*	ON		*	LED			BO					
1357	E/F 3I0p PICKED UP (EF 3I0p Pickup)	Earth Fault O/C	OUT	*	ON		*	LED			BO					

No.	Description	Function	Type of Information	Log Buffers				Configurable in Matrix					IEC 60870-5-103			
				Event Log ON/OFF	Trip (Fault) Log On/Off	Ground Fault Log ON/OFF	Marked in Oscill. Record	LED	Binary Input	Function Key	Relay	Chatter Suppression	Type	Information Number	Data Unit	General Interrogation
1358	E/F picked up FORWARD (EF forward)	Earth Fault O/C	OUT	*	ON		*	LED			BO		166	58	2	No
1359	E/F picked up REVERSE (EF reverse)	Earth Fault O/C	OUT	*	ON		*	LED			BO		166	59	2	No
1361	E/F General TRIP command (EF Trip)	Earth Fault O/C	OUT	*	*		*	LED			BO		166	61	2	No
1362	Earth fault protection: Trip 1pole L1 (E/F Trip L1)	Earth Fault O/C	OUT	*	ON		m	LED			BO		166	62	2	Yes
1363	Earth fault protection: Trip 1pole L2 (E/F Trip L2)	Earth Fault O/C	OUT	*	ON		m	LED			BO		166	63	2	Yes
1364	Earth fault protection: Trip 1pole L3 (E/F Trip L3)	Earth Fault O/C	OUT	*	ON		m	LED			BO		166	64	2	Yes
1365	Earth fault protection: Trip 3pole (E/F Trip 3p)	Earth Fault O/C	OUT	*	ON		m	LED			BO		166	65	2	Yes
1366	E/F 3I0>>> TRIP (EF 3I0>>> TRIP)	Earth Fault O/C	OUT	*	ON		*	LED			BO		166	66	2	No
1367	E/F 3I0>> TRIP (EF 3I0>> TRIP)	Earth Fault O/C	OUT	*	ON		*	LED			BO		166	67	2	No
1368	E/F 3I0> TRIP (EF 3I0> TRIP)	Earth Fault O/C	OUT	*	ON		*	LED			BO		166	68	2	No
1369	E/F 3I0p TRIP (EF 3I0p TRIP)	Earth Fault O/C	OUT	*	ON		*	LED			BO		166	69	2	No
1370	E/F Inrush picked up (EF Inrush-PU)	Earth Fault O/C	OUT	*	ON OFF		*	LED			BO		166	70	2	No
1371	E/F Telep. Carrier SEND signal, Phase L1 (EF Tele SEND L1)	Teleprot. E/F	OUT	on	on		*	LED			BO		166	71	1	No
1372	E/F Telep. Carrier SEND signal, Phase L2 (EF Tele SEND L2)	Teleprot. E/F	OUT	on	on		*	LED			BO		166	72	1	No
1373	E/F Telep. Carrier SEND signal, Phase L3 (EF Tele SEND L3)	Teleprot. E/F	OUT	on	on		*	LED			BO		166	73	1	No
1374	E/F Telep. Block: carrier STOP signal L1 (EF Tele STOP L1)	Teleprot. E/F	OUT	*	on		*	LED			BO		166	74	2	No
1375	E/F Telep. Block: carrier STOP signal L2 (EF Tele STOP L2)	Teleprot. E/F	OUT	*	on		*	LED			BO		166	75	2	No
1376	E/F Telep. Block: carrier STOP signal L3 (EF Tele STOP L3)	Teleprot. E/F	OUT	*	on		*	LED			BO		166	76	2	No
1380	E/F Teleprot. ON/OFF via BI (EF TeleON/offBI)	Teleprot. E/F	IntSP	ON OFF	*		*	LED			BO					
1381	E/F Teleprotection is switched OFF (EF Telep. OFF)	Teleprot. E/F	OUT	ON OFF	*		*	LED			BO		166	81	1	Yes
1384	E/F Telep. Carrier SEND signal (EF Tele SEND)	Teleprot. E/F	OUT	on	on		*	LED			BO		166	84	2	No
1386	E/F Telep. Transient Blocking (EF TeleTransBlk)	Teleprot. E/F	OUT	*	ON		*	LED			BO		166	86	2	No
1387	E/F Telep. Unblocking: FAILURE Channel 1 (EF TeleUB Fail1)	Teleprot. E/F	OUT	ON OFF	*		*	LED			BO		166	87	1	Yes
1388	E/F Telep. Unblocking: FAILURE Channel 2 (EF TeleUB Fail2)	Teleprot. E/F	OUT	ON OFF	*		*	LED			BO		166	88	1	Yes
1389	E/F Telep. Blocking: carrier STOP signal (EF Tele BL STOP)	Teleprot. E/F	OUT	*	on		*	LED			BO		166	89	2	No
1390	E/F Tele.Blocking: Send signal with jump (EF Tele BL Jump)	Teleprot. E/F	OUT	*	*		*	LED			BO		166	90	2	No
1391	EF Tele.Carrier RECEPTION, L1, Device1 (EF Rec.L1 Dev1)	Teleprot. E/F	OUT	on off	on		*	LED			BO					
1392	EF Tele.Carrier RECEPTION, L2, Device1 (EF Rec.L2 Dev1)	Teleprot. E/F	OUT	on off	on		*	LED			BO					
1393	EF Tele.Carrier RECEPTION, L3, Device1 (EF Rec.L3 Dev1)	Teleprot. E/F	OUT	on off	on		*	LED			BO					

No.	Description	Function	Type of Information	Log Buffers				Configurable in Matrix					IEC 60870-5-103			
				Event Log ON/OFF	Trip (Fault) Log On/Off	Ground Fault Log ON/OFF	Marked in Oscill. Record	LED	Binary Input	Function Key	Relay	Chatter Suppression	Type	Information Number	Data Unit	General Interrogation
1394	EF Tele.Carrier RECEPTION, L1, Device2 (EF Rec.L1 Dev2)	Teleprot. E/F	OUT	on off	on		*	LED			BO					
1395	EF Tele.Carrier RECEPTION, L2, Device2 (EF Rec.L2 Dev2)	Teleprot. E/F	OUT	on off	on		*	LED			BO					
1396	EF Tele.Carrier RECEPTION, L3, Device2 (EF Rec.L3 Dev2)	Teleprot. E/F	OUT	on off	on		*	LED			BO					
1397	EF Tele.Carrier RECEPTION, L1, Device3 (EF Rec.L1 Dev3)	Teleprot. E/F	OUT	on off	on		*	LED			BO					
1398	EF Tele.Carrier RECEPTION, L2, Device3 (EF Rec.L2 Dev3)	Teleprot. E/F	OUT	on off	on		*	LED			BO					
1399	EF Tele.Carrier RECEPTION, L3, Device3 (EF Rec.L3 Dev3)	Teleprot. E/F	OUT	on off	on		*	LED			BO					
1401	>BF: Switch on breaker fail protection (>BF on)	Breaker Failure	SP	*	*		*	LED	BI		BO					
1402	>BF: Switch off breaker fail protection (>BF off)	Breaker Failure	SP	*	*		*	LED	BI		BO					
1403	>BLOCK Breaker failure (>BLOCK BkrFail)	Breaker Failure	SP	ON OFF	*		*	LED	BI		BO		166	103	1	Yes
1404	>BF Activate 3I0> threshold (>BFactivate3I0>)	Breaker Failure	SP	ON OFF	*		*	LED	BI		BO					
1415	>BF: External start 3pole (>BF Start 3pole)	Breaker Failure	SP	ON OFF	*		*	LED	BI		BO					
1424	>BF: Start only delay time T2 (>BF STARTonlyT2)	Breaker Failure	SP	ON OFF	ON OFF		*	LED	BI		BO					
1432	>BF: External release (>BF release)	Breaker Failure	SP	ON OFF	*		*	LED	BI		BO					
1435	>BF: External start L1 (>BF Start L1)	Breaker Failure	SP	ON OFF	*		*	LED	BI		BO					
1436	>BF: External start L2 (>BF Start L2)	Breaker Failure	SP	ON OFF	*		*	LED	BI		BO					
1437	>BF: External start L3 (>BF Start L3)	Breaker Failure	SP	ON OFF	*		*	LED	BI		BO					
1439	>BF: External start 3pole (w/o current) (>BF Start w/o I)	Breaker Failure	SP	ON OFF	*		*	LED	BI		BO					
1440	Breaker failure prot. ON/OFF via BI (BkrFailON/offBI)	Breaker Failure	IntSP	ON OFF	*		*	LED			BO					
1451	Breaker failure is switched OFF (BkrFail OFF)	Breaker Failure	OUT	ON OFF	*		*	LED			BO		166	151	1	Yes
1452	Breaker failure is BLOCKED (BkrFail BLOCK)	Breaker Failure	OUT	ON OFF	ON OFF		*	LED			BO		166	152	1	Yes
1453	Breaker failure is ACTIVE (BkrFail ACTIVE)	Breaker Failure	OUT	*	*		*	LED			BO		166	153	1	Yes
1461	Breaker failure protection started (BF Start)	Breaker Failure	OUT	*	ON OFF		*	LED			BO		166	161	2	Yes
1472	BF Trip T1 (local trip) - only phase L1 (BF T1-TRIP 1pL1)	Breaker Failure	OUT	*	ON		*	LED			BO					
1473	BF Trip T1 (local trip) - only phase L2 (BF T1-TRIP 1pL2)	Breaker Failure	OUT	*	ON		*	LED			BO					
1474	BF Trip T1 (local trip) - only phase L3 (BF T1-TRIP 1pL3)	Breaker Failure	OUT	*	ON		*	LED			BO					
1476	BF Trip T1 (local trip) - 3pole (BF T1-TRIP L123)	Breaker Failure	OUT	*	ON		*	LED			BO					
1493	BF Trip in case of defective CB (BF TRIP CBdefec)	Breaker Failure	OUT	*	ON		*	LED			BO					
1494	BF Trip T2 (busbar trip) (BF T2-TRIP(bus))	Breaker Failure	OUT	*	ON		*	LED			BO		128	85	2	No

No.	Description	Function	Type of In-for-matio n	Log Buffers				Configurable in Matrix					IEC 60870-5-103			
				Event Log ON/OFF	Trip (Fault) Log On/Off	Ground Fault Log ON/OFF	Marked in Oscill. Record	LED	Binary Input	Function Key	Relay	Chatter Suppression	Type	Information Number	Data Unit	General Interrogation
1495	BF Trip End fault stage (BF EndFlt TRIP)	Breaker Failure	OUT	*	ON		*	LED			BO					
1496	BF Pole discrepancy pickup (BF CBdiscrSTART)	Breaker Failure	OUT	*	ON OFF		*	LED			BO					
1497	BF Pole discrepancy pickup L1 (BF CBdiscr L1)	Breaker Failure	OUT	*	ON OFF		*	LED			BO					
1498	BF Pole discrepancy pickup L2 (BF CBdiscr L2)	Breaker Failure	OUT	*	ON OFF		*	LED			BO					
1499	BF Pole discrepancy pickup L3 (BF CBdiscr L3)	Breaker Failure	OUT	*	ON OFF		*	LED			BO					
1500	BF Pole discrepancy Trip (BF CBdiscr TRIP)	Breaker Failure	OUT	*	ON		*	LED			BO					
2054	Emergency mode (Emer. mode)	Back-Up O/C	OUT	ON OFF	ON OFF		*	LED			BO		128	37	1	Yes
2701	>AR: Switch on auto-reclose function (>AR on)	Autoreclosure	SP	*	*		*	LED	BI		BO		40	1	1	No
2702	>AR: Switch off auto-reclose function (>AR off)	Autoreclosure	SP	*	*		*	LED	BI		BO		40	2	1	No
2703	>AR: Block auto-reclose function (>AR block)	Autoreclosure	SP	ON OFF	*		*	LED	BI		BO		40	3	1	Yes
2711	>External start of internal Auto reclose (>AR Start)	Autoreclosure	SP	*	ON		*	LED	BI		BO		40	11	2	Yes
2712	>AR: External trip L1 for AR start (>Trip L1 AR)	Autoreclosure	SP	*	ON		*	LED	BI		BO		40	12	2	Yes
2713	>AR: External trip L2 for AR start (>Trip L2 AR)	Autoreclosure	SP	*	ON		*	LED	BI		BO		40	13	2	Yes
2714	>AR: External trip L3 for AR start (>Trip L3 AR)	Autoreclosure	SP	*	ON		*	LED	BI		BO		40	14	2	Yes
2715	>AR: External 1pole trip for AR start (>Trip 1pole AR)	Autoreclosure	SP	*	ON		*	LED	BI		BO		40	15	2	Yes
2716	>AR: External 3pole trip for AR start (>Trip 3pole AR)	Autoreclosure	SP	*	ON		*	LED	BI		BO		40	16	2	Yes
2727	>AR: Remote Close signal (>AR RemoteClose)	Autoreclosure	SP	*	ON		*	LED	BI		BO		40	22	2	Yes
2731	>AR: Sync. release from ext. sync.-check (>Sync.release)	Autoreclosure	SP	*	*		*	LED	BI		BO		40	31	2	Yes
2737	>AR: Block 1pole AR-cycle (>BLOCK 1pole AR)	Autoreclosure	SP	ON OFF	*		*	LED	BI		BO		40	32	1	Yes
2738	>AR: Block 3pole AR-cycle (>BLOCK 3pole AR)	Autoreclosure	SP	ON OFF	*		*	LED	BI		BO		40	33	1	Yes
2739	>AR: Block 1phase-fault AR-cycle (>BLK 1phase AR)	Autoreclosure	SP	ON OFF	*		*	LED	BI		BO		40	34	1	Yes
2740	>AR: Block 2phase-fault AR-cycle (>BLK 2phase AR)	Autoreclosure	SP	ON OFF	*		*	LED	BI		BO		40	35	1	Yes
2741	>AR: Block 3phase-fault AR-cycle (>BLK 3phase AR)	Autoreclosure	SP	ON OFF	*		*	LED	BI		BO		40	36	1	Yes
2742	>AR: Block 1st AR-cycle (>BLK 1.AR-cycle)	Autoreclosure	SP	ON OFF	*		*	LED	BI		BO		40	37	1	Yes
2743	>AR: Block 2nd AR-cycle (>BLK 2.AR-cycle)	Autoreclosure	SP	ON OFF	*		*	LED	BI		BO		40	38	1	Yes
2744	>AR: Block 3rd AR-cycle (>BLK 3.AR-cycle)	Autoreclosure	SP	ON OFF	*		*	LED	BI		BO		40	39	1	Yes
2745	>AR: Block 4th and higher AR-cycles (>BLK 4.-n. AR)	Autoreclosure	SP	ON OFF	*		*	LED	BI		BO		40	40	1	Yes
2746	>AR: External Trip for AR start (>Trip for AR)	Autoreclosure	SP	*	ON		*	LED	BI		BO		40	41	2	Yes

No.	Description	Function	Type of In-for-matio n	Log Buffers				Configurable in Matrix					IEC 60870-5-103			
				Event Log ON/OFF	Trip (Fault) Log On/Off	Ground Fault Log ON/OFF	Marked in Oscill. Record	LED	Binary Input	Function Key	Relay	Chatter Suppression	Type	Information Number	Data Unit	General Interrogation
2747	>AR: External pickup L1 for AR start (>Pickup L1 AR)	Autoreclosure	SP	*	ON		*	LED	BI		BO		40	42	2	Yes
2748	>AR: External pickup L2 for AR start (>Pickup L2 AR)	Autoreclosure	SP	*	ON		*	LED	BI		BO		40	43	2	Yes
2749	>AR: External pickup L3 for AR start (>Pickup L3 AR)	Autoreclosure	SP	*	ON		*	LED	BI		BO		40	44	2	Yes
2750	>AR: External pickup 1phase for AR start (>Pickup 1ph AR)	Autoreclosure	SP	*	ON		*	LED	BI		BO		40	45	2	Yes
2751	>AR: External pickup 2phase for AR start (>Pickup 2ph AR)	Autoreclosure	SP	*	ON		*	LED	BI		BO		40	46	2	Yes
2752	>AR: External pickup 3phase for AR start (>Pickup 3ph AR)	Autoreclosure	SP	*	ON		*	LED	BI		BO		40	47	2	Yes
2781	AR: Auto-reclose is switched off (AR off)	Autoreclosure	OUT	ON OFF	*		*	LED			BO		40	81	1	Yes
2782	AR: Auto-reclose is switched on (AR on)	Autoreclosure	IntSP	*	*		*	LED			BO		128	16	1	Yes
2783	AR: Auto-reclose is blocked (AR is blocked)	Autoreclosure	OUT	ON OFF	*		*	LED			BO		40	83	1	Yes
2784	AR: Auto-reclose is not ready (AR not ready)	Autoreclosure	OUT	*	ON		*	LED			BO		128	130	1	Yes
2787	AR: Circuit breaker not ready (CB not ready)	Autoreclosure	OUT	*	*		*	LED			BO		40	87	1	No
2788	AR: CB ready monitoring window expired (AR T-CBreadyExp)	Autoreclosure	OUT	*	ON		*	LED			BO		40	88	2	No
2796	AR: Auto-reclose ON/OFF via BI (AR on/off BI)	Autoreclosure	IntSP	*	*		*	LED			BO					
2801	AR: Auto-reclose in progress (AR in progress)	Autoreclosure	OUT	*	ON		*	LED			BO		40	101	2	Yes
2809	AR: Start-signal monitoring time expired (AR T-Start Exp)	Autoreclosure	OUT	*	ON		*	LED			BO		40	174	2	No
2810	AR: Maximum dead time expired (AR TdeadMax Exp)	Autoreclosure	OUT	*	ON		*	LED			BO		40	175	2	No
2818	AR: Evolving fault recognition (AR evolving Flt)	Autoreclosure	OUT	*	ON		*	LED			BO		40	118	2	Yes
2820	AR is set to operate after 1p trip only (AR Program1pole)	Autoreclosure	OUT	*	*		*	LED			BO		40	143	1	No
2821	AR dead time after evolving fault (AR Td. evol.Flt)	Autoreclosure	OUT	*	ON		*	LED			BO		40	197	2	No
2839	AR dead time after 1pole trip running (AR Tdead 1pTrip)	Autoreclosure	OUT	*	ON		*	LED			BO		40	148	2	Yes
2840	AR dead time after 3pole trip running (AR Tdead 3pTrip)	Autoreclosure	OUT	*	ON		*	LED			BO		40	149	2	Yes
2841	AR dead time after 1phase fault running (AR Tdead 1pFlt)	Autoreclosure	OUT	*	ON		*	LED			BO		40	150	2	Yes
2842	AR dead time after 2phase fault running (AR Tdead 2pFlt)	Autoreclosure	OUT	*	ON		*	LED			BO		40	151	2	Yes
2843	AR dead time after 3phase fault running (AR Tdead 3pFlt)	Autoreclosure	OUT	*	ON		*	LED			BO		40	154	2	Yes
2844	AR 1st cycle running (AR 1stCyc. run.)	Autoreclosure	OUT	*	ON		*	LED			BO		40	155	2	Yes
2845	AR 2nd cycle running (AR 2ndCyc. run.)	Autoreclosure	OUT	*	ON		*	LED			BO		40	157	2	Yes
2846	AR 3rd cycle running (AR 3rdCyc. run.)	Autoreclosure	OUT	*	ON		*	LED			BO		40	158	2	Yes
2847	AR 4th or higher cycle running (AR 4thCyc. run.)	Autoreclosure	OUT	*	ON		*	LED			BO		40	159	2	Yes

No.	Description	Function	Type of In-for-matio n	Log Buffers				Configurable in Matrix					IEC 60870-5-103			
				Event Log ON/OFF	Trip (Fault) Log On/Off	Ground Fault Log ON/OFF	Marked in Oscill. Record	LED	Binary Input	Function Key	Relay	Chatter Suppression	Type	Information Number	Data Unit	General Interrogation
2848	AR cycle is running in ADT mode (AR ADT run.)	Autoreclosure	OUT	*	ON		*	LED			BO		40	130	2	Yes
2851	AR: Close command (AR CLOSE Cmd.)	Autoreclosure	OUT	*	ON		m	LED			BO		128	128	2	No
2852	AR: Close command after 1pole, 1st cycle (AR Close1.Cyc1p)	Autoreclosure	OUT	*	*		*	LED			BO		40	152	1	No
2853	AR: Close command after 3pole, 1st cycle (AR Close1.Cyc3p)	Autoreclosure	OUT	*	*		*	LED			BO		40	153	1	No
2854	AR: Close command 2nd cycle (and higher) (AR Close 2.Cyc)	Autoreclosure	OUT	*	*		*	LED			BO		128	129	1	No
2857	AR: RDT Close command after TDEADxTRIP (AR CLOSE RDT TD)	Autoreclosure	OUT	*	*		*	LED			BO					
2861	AR: Reclaim time is running (AR T-Recl. run.)	Autoreclosure	OUT	*	*		*	LED			BO		40	161	1	No
2862	AR successful (AR successful)	Autoreclosure	OUT	*	*		*	LED			BO		40	162	1	No
2864	AR: 1pole trip permitted by internal AR (AR 1p Trip Perm)	Autoreclosure	OUT	*	*		*	LED			BO		40	164	1	Yes
2865	AR: Synchro-check request (AR Sync.Request)	Autoreclosure	OUT	*	*		*	LED			BO		40	165	2	Yes
2871	AR: TRIP command 3pole (AR TRIP 3pole)	Autoreclosure	OUT	*	ON		*	LED			BO		40	171	2	Yes
2889	AR 1st cycle zone extension release (AR 1.CycZoneRel)	Autoreclosure	OUT	*	*		*	LED			BO		40	160	1	No
2890	AR 2nd cycle zone extension release (AR 2.CycZoneRel)	Autoreclosure	OUT	*	*		*	LED			BO		40	169	1	No
2891	AR 3rd cycle zone extension release (AR 3.CycZoneRel)	Autoreclosure	OUT	*	*		*	LED			BO		40	170	1	No
2892	AR 4th cycle zone extension release (AR 4.CycZoneRel)	Autoreclosure	OUT	*	*		*	LED			BO		40	172	1	No
2893	AR zone extension (general) (AR Zone Release)	Autoreclosure	OUT	*	*		*	LED			BO		40	173	1	Yes
2894	AR Remote close signal send (AR Remote Close)	Autoreclosure	OUT	*	ON		*	LED			BO		40	129	2	No
2895	No. of 1st AR-cycle CLOSE commands,1pole (AR #Close1./1p=)	Statistics	VI													
2896	No. of 1st AR-cycle CLOSE commands,3pole (AR #Close1./3p=)	Statistics	VI													
2897	No. of higher AR-cycle CLOSE commands,1p (AR #Close2./1p=)	Statistics	VI													
2898	No. of higher AR-cycle CLOSE commands,3p (AR #Close2./3p=)	Statistics	VI													
2901	>Switch on synchro-check function (>Sync. on)	Sync. Check	SP	*	*		*	LED	BI		BO					
2902	>Switch off synchro-check function (>Sync. off)	Sync. Check	SP	*	*		*	LED	BI		BO					
2903	>BLOCK synchro-check function (>BLOCK Sync.)	Sync. Check	SP	*	*		*	LED	BI		BO					
2905	>Start synchro-check for Manual Close (>Sync. Start MC)	Sync. Check	SP	on off	*		*	LED	BI		BO					
2906	>Start synchro-check for AR (>Sync. Start AR)	Sync. Check	SP	on off	*		*	LED	BI		BO					
2907	>Sync-Prog. Live bus / live line / Sync (>Sync. synch)	Sync. Check	SP	*	*		*	LED	BI		BO					
2908	>Sync-Prog. Usy1>Usy2< (>Usy1>Usy2<)	Sync. Check	SP	*	*		*	LED	BI		BO					

No.	Description	Function	Type of Information	Log Buffers				Configurable in Matrix					IEC 60870-5-103			
				Event Log ON/OFF	Trip (Fault) Log On/Off	Ground Fault Log ON/OFF	Marked in Oscill. Record	LED	Binary Input	Function Key	Relay	Chatter Suppression	Type	Information Number	Data Unit	General Interrogation
2909	>Sync-Prog. Usy1<Usy2> (>Usy1<Usy2>)	Sync. Check	SP	*	*		*	LED	BI		BO					
2910	>Sync-Prog. Usy1<Usy2< (>Usy1<Usy2<)	Sync. Check	SP	*	*		*	LED	BI		BO					
2911	>Sync-Prog. Override (bypass) (>Sync. o/ride)	Sync. Check	SP	*	*		*	LED	BI		BO					
2930	Synchro-check ON/OFF via BI (Sync. on/off BI)	Sync. Check	IntSP	ON OFF	*		*	LED			BO					
2931	Synchro-check is switched OFF (Sync. OFF)	Sync. Check	OUT	ON OFF	*		*	LED			BO		41	31	1	Yes
2932	Synchro-check is BLOCKED (Sync. BLOCK)	Sync. Check	OUT	ON OFF	ON OFF		*	LED			BO		41	32	1	Yes
2934	Synchro-check function faulty (Sync. faulty)	Sync. Check	OUT	ON OFF	*		*	LED			BO		41	34	1	Yes
2935	Synchro-check supervision time expired (Sync.Tsup.Exp)	Sync. Check	OUT	ON	ON		*	LED			BO		41	35	1	No
2936	Synchro-check request by control (Sync. req.CNTRL)	Sync. Check	OUT	ON	ON		*	LED			BO		41	36	1	No
2941	Synchronization is running (Sync. running)	Sync. Check	OUT	ON OFF	ON		*	LED			BO		41	41	1	Yes
2942	Synchro-check override/bypass (Sync.Override)	Sync. Check	OUT	ON OFF	ON		*	LED			BO		41	42	1	Yes
2943	Synchronism detected (Synchro-nism)	Sync. Check	OUT	ON OFF	*		*	LED			BO		41	43	1	Yes
2944	SYNC Condition Usy1>Usy2< true (SYNC Usy1>Usy2<)	Sync. Check	OUT	ON OFF	*		*	LED			BO		41	44	1	Yes
2945	SYNC Condition Usy1<Usy2> true (SYNC Usy1<Usy2>)	Sync. Check	OUT	ON OFF	*		*	LED			BO		41	45	1	Yes
2946	SYNC Condition Usy1<Usy2< true (SYNC Usy1<Usy2<)	Sync. Check	OUT	ON OFF	*		*	LED			BO		41	46	1	Yes
2947	Sync. Voltage diff. greater than limit (Sync. Udiff>)	Sync. Check	OUT	ON OFF	ON OFF		*	LED			BO		41	47	1	Yes
2948	Sync. Freq. diff. greater than limit (Sync. fdiff>)	Sync. Check	OUT	ON OFF	ON OFF		*	LED			BO		41	48	1	Yes
2949	Sync. Angle diff. greater than limit (Sync. φ-diff>)	Sync. Check	OUT	ON OFF	ON OFF		*	LED			BO		41	49	1	Yes
2951	Synchronism release (to ext. AR) (Sync. release)	Sync. Check	OUT	*	*		*	LED			BO		41	51	1	Yes
2961	Close command from synchro-check (Sync.CloseCmd)	Sync. Check	OUT	*	*		*	LED			BO		41	61	1	Yes
2970	SYNC frequency fsy2 > (fn + 3Hz) (SYNC fsy2>>)	Sync. Check	OUT	ON OFF	ON OFF		*	LED			BO					
2971	SYNC frequency fsy2 < (fn + 3Hz) (SYNC fsy2<<)	Sync. Check	OUT	ON OFF	ON OFF		*	LED			BO					
2972	SYNC frequency fsy1 > (fn + 3Hz) (SYNC fsy1>>)	Sync. Check	OUT	ON OFF	ON OFF		*	LED			BO					
2973	SYNC frequency fsy1 < (fn + 3Hz) (SYNC fsy1<<)	Sync. Check	OUT	ON OFF	ON OFF		*	LED			BO					
2974	SYNC voltage Usy2 >Umax (P.3504) (SYNC Usy2>>)	Sync. Check	OUT	ON OFF	ON OFF		*	LED			BO					
2975	SYNC voltage Usy2 < U> (P.3503) (SYNC Usy2<<)	Sync. Check	OUT	ON OFF	ON OFF		*	LED			BO					
2976	SYNC voltage Usy1 >Umax (P.3504) (SYNC Usy1>>)	Sync. Check	OUT	ON OFF	ON OFF		*	LED			BO					
2977	SYNC voltage Usy1 < U> (P.3503) (SYNC Usy1<<)	Sync. Check	OUT	ON OFF	ON OFF		*	LED			BO					

No.	Description	Function	Type of In-for-matio n	Log Buffers				Configurable in Matrix					IEC 60870-5-103			
				Event Log ON/OFF	Trip (Fault) Log On/Off	Ground Fault Log ON/OFF	Marked in Oscill. Record	LED	Binary Input	Function Key	Relay	Chatter Suppression	Type	Information Number	Data Unit	General Interrogation
2978	SYNC Udiff too large (Usy2>Usy1) (SYNC Usy2>Usy1)	Sync. Check	OUT	ON OFF	ON OFF		*	LED			BO					
2979	SYNC Udiff too large (Usy2<Usy1) (SYNC Usy2<Usy1)	Sync. Check	OUT	ON OFF	ON OFF		*	LED			BO					
2980	SYNC fdiff too large (fsy2>fsy1) (SYNC fsy2>fsy1)	Sync. Check	OUT	ON OFF	ON OFF		*	LED			BO					
2981	SYNC fdiff too large (fsy2<fsy1) (SYNC fsy2<fsy1)	Sync. Check	OUT	ON OFF	ON OFF		*	LED			BO					
2982	SYNC PHIdiff too large (PHIsy2>PHIsy1) (SYNC φsy2>φsy1)	Sync. Check	OUT	ON OFF	ON OFF		*	LED			BO					
2983	SYNC PHIdiff too large (PHIsy2<PHIsy1) (SYNC φsy2<φsy1)	Sync. Check	OUT	ON OFF	ON OFF		*	LED			BO					
3196	Local relay in Teststate (local Teststate)	Prot. Interface	IntSP	ON OFF	ON		*	LED		FC TN	BO					
3215	Incompatible Firmware Versions (Wrong Firmware)	Prot. Interface	OUT	ON	*		*	LED			BO					
3217	Prot Int 1: Own Datas received (PI1 Data reflec)	Prot. Interface	OUT	ON OFF	*		*	LED			BO					
3218	Prot Int 2: Own Datas received (PI2 Data reflec)	Prot. Interface	OUT	ON OFF	*		*	LED			BO					
3227	>Prot Int 1: Transmitter is switched off (>PI1 light off)	Prot. Interface	SP	ON OFF	*		*	LED	BI		BO					
3228	>Prot Int 2: Transmitter is switched off (>PI2 light off)	Prot. Interface	SP	ON OFF	*		*	LED	BI		BO					
3229	Prot Int 1: Reception of faulty data (PI1 Data fault)	Prot. Interface	OUT	ON OFF	*		*	LED			BO		93	135	1	Yes
3230	Prot Int 1: Total receiption failure (PI1 Datafailure)	Prot. Interface	OUT	ON OFF	*		*	LED			BO		93	136	1	Yes
3231	Prot Int 2: Reception of faulty data (PI2 Data fault)	Prot. Interface	OUT	ON OFF	*		*	LED			BO		93	137	1	Yes
3232	Prot Int 2: Total receiption failure (PI2 Datafailure)	Prot. Interface	OUT	ON OFF	*		*	LED			BO		93	138	1	Yes
3233	Device table has inconsistent numbers (DT inconsistent)	Prot. Interface	OUT	ON OFF	*		*	LED			BO					
3234	Device tables are unequal (DT unequal)	Prot. Interface	OUT	ON OFF	*		*	LED			BO					
3235	Differences between common parameters (Par. different)	Prot. Interface	OUT	ON OFF	*		*	LED			BO					
3236	Different PI for transmit and receive (PI1<->PI2 error)	Prot. Interface	OUT	ON OFF	*		*	LED			BO					
3239	Prot Int 1: Transmission delay too high (PI1 TD alarm)	Prot. Interface	OUT	ON OFF	*		*	LED			BO		93	139	1	Yes
3240	Prot Int 2: Transmission delay too high (PI2 TD alarm)	Prot. Interface	OUT	ON OFF	*		*	LED			BO		93	140	1	Yes
3243	Prot Int 1: Connected with relay ID (PI1 with)	Prot. Interface	VI	ON OFF	*		*									
3244	Prot Int 2: Connected with relay ID (PI2 with)	Prot. Interface	VI	ON OFF	*		*									
3274	PI1: IEEE C37.94 not supported by module (PI1: C37.94 n/a)	Prot. Interface	OUT	on off	*		*	LED			BO					
3275	PI2: IEEE C37.94 not supported by module (PI2: C37.94 n/a)	Prot. Interface	OUT	on off	*		*	LED			BO					

No.	Description	Function	Type of Information	Log Buffers				Configurable in Matrix					IEC 60870-5-103			
				Event Log ON/OFF	Trip (Fault) Log On/Off	Ground Fault Log ON/OFF	Marked in Oscill. Record	LED	Binary Input	Function Key	Relay	Chatter Suppression	Type	Information Number	Data Unit	General Interrogation
3457	System operates in a closed Ringtopology (Ringtopology)	Prot. Interface	OUT	ON OFF	*		*	LED			BO		93	141	1	Yes
3458	System operates in a open Chaintopology (Chaintopology)	Prot. Interface	OUT	ON OFF	*		*	LED			BO		93	142	1	Yes
3464	Communication topology is complete (Topol complete)	Prot. Interface	OUT	ON OFF	*		*	LED			BO					
3475	Relay 1 in Logout state (Rel1Logout)	Prot. Interface	IntSP	ON OFF	*		*	LED		FC TN	BO		93	143	1	Yes
3476	Relay 2 in Logout state (Rel2Logout)	Prot. Interface	IntSP	ON OFF	*		*	LED		FC TN	BO		93	144	1	Yes
3477	Relay 3 in Logout state (Rel3Logout)	Prot. Interface	IntSP	ON OFF	*		*	LED		FC TN	BO		93	145	1	Yes
3484	Local activation of Logout state (Logout)	Prot. Interface	IntSP	ON OFF	*		*	LED		FC TN	BO		93	149	1	Yes
3487	Equal IDs in constellation (Equal IDs)	Prot. Interface	OUT	ON OFF	*		*	LED			BO					
3491	Relay 1 in Login state (Rel1 Login)	Prot. Interface	OUT	ON OFF	*		*	LED			BO		93	191	1	Yes
3492	Relay 2 in Login state (Rel2 Login)	Prot. Interface	OUT	ON OFF	*		*	LED			BO		93	192	1	Yes
3493	Relay 3 in Login state (Rel3 Login)	Prot. Interface	OUT	ON OFF	*		*	LED			BO		93	193	1	Yes
3541	>Remote Command 1 signal input (>Remote CMD 1)	Remote Signals	SP	on off	*		*	LED	BI		BO					
3542	>Remote Command 2 signal input (>Remote CMD 2)	Remote Signals	SP	on off	*		*	LED	BI		BO					
3543	>Remote Command 3 signal input (>Remote CMD 3)	Remote Signals	SP	on off	*		*	LED	BI		BO					
3544	>Remote Command 4 signal input (>Remote CMD 4)	Remote Signals	SP	on off	*		*	LED	BI		BO					
3545	Remote Command 1 received (Remote CMD1 rec)	Remote Signals	OUT	on off	*		*	LED			BO		93	154	1	Yes
3546	Remote Command 2 received (Remote CMD2 rec)	Remote Signals	OUT	on off	*		*	LED			BO		93	155	1	Yes
3547	Remote Command 3 received (Remote CMD3 rec)	Remote Signals	OUT	on off	*		*	LED			BO		93	156	1	Yes
3548	Remote Command 4 received (Remote CMD4 rec)	Remote Signals	OUT	on off	*		*	LED			BO		93	157	1	Yes
3549	>Remote Signal 1 input (>Rem. Signal 1)	Remote Signals	SP	on off	*		*	LED	BI		BO					
3550	>Remote Signal 2 input (>Rem.Signal 2)	Remote Signals	SP	on off	*		*	LED	BI		BO					
3551	>Remote Signal 3 input (>Rem.Signal 3)	Remote Signals	SP	on off	*		*	LED	BI		BO					
3552	>Remote Signal 4 input (>Rem.Signal 4)	Remote Signals	SP	on off	*		*	LED	BI		BO					
3553	>Remote Signal 5 input (>Rem.Signal 5)	Remote Signals	SP	on off	*		*	LED	BI		BO					
3554	>Remote Signal 6 input (>Rem.Signal 6)	Remote Signals	SP	on off	*		*	LED	BI		BO					
3555	>Remote Signal 7 input (>Rem.Signal 7)	Remote Signals	SP	on off	*		*	LED	BI		BO					
3556	>Remote Signal 8 input (>Rem.Signal 8)	Remote Signals	SP	on off	*		*	LED	BI		BO					
3557	>Remote Signal 9 input (>Rem.Signal 9)	Remote Signals	SP	on off	*		*	LED	BI		BO					

No.	Description	Function	Type of In-for-matio n	Log Buffers				Configurable in Matrix					IEC 60870-5-103			
				Event Log ON/OFF	Trip (Fault) Log On/Off	Ground Fault Log ON/OFF	Marked in Oscill. Record	LED	Binary Input	Function Key	Relay	Chatter Suppression	Type	Information Number	Data Unit	General Interrogation
3558	>Remote Signal 10 input (>Rem.Signal10)	Remote Signals	SP	on off	*		*	LED	BI		BO					
3559	>Remote Signal 11 input (>Rem.Signal11)	Remote Signals	SP	on off	*		*	LED	BI		BO					
3560	>Remote Signal 12 input (>Rem.Signal12)	Remote Signals	SP	on off	*		*	LED	BI		BO					
3561	>Remote Signal 13 input (>Rem.Signal13)	Remote Signals	SP	on off	*		*	LED	BI		BO					
3562	>Remote Signal 14 input (>Rem.Signal14)	Remote Signals	SP	on off	*		*	LED	BI		BO					
3563	>Remote Signal 15 input (>Rem.Signal15)	Remote Signals	SP	on off	*		*	LED	BI		BO					
3564	>Remote Signal 16 input (>Rem.Signal16)	Remote Signals	SP	on off	*		*	LED	BI		BO					
3565	>Remote Signal 17 input (>Rem.Signal17)	Remote Signals	SP	on off	*		*	LED	BI		BO					
3566	>Remote Signal 18 input (>Rem.Signal18)	Remote Signals	SP	on off	*		*	LED	BI		BO					
3567	>Remote Signal 19 input (>Rem.Signal19)	Remote Signals	SP	on off	*		*	LED	BI		BO					
3568	>Remote Signal 20 input (>Rem.Signal20)	Remote Signals	SP	on off	*		*	LED	BI		BO					
3569	>Remote Signal 21 input (>Rem.Signal21)	Remote Signals	SP	on off	*		*	LED	BI		BO					
3570	>Remote Signal 22 input (>Rem.Signal22)	Remote Signals	SP	on off	*		*	LED	BI		BO					
3571	>Remote Signal 23 input (>Rem.Signal23)	Remote Signals	SP	on off	*		*	LED	BI		BO					
3572	>Remote Signal 24 input (>Rem.Signal24)	Remote Signals	SP	on off	*		*	LED	BI		BO					
3573	Remote signal 1 received (Rem.Sig 1recv)	Remote Signals	OUT	on off	*		*	LED			BO		93	158	1	Yes
3574	Remote signal 2 received (Rem.Sig 2recv)	Remote Signals	OUT	on off	*		*	LED			BO		93	159	1	Yes
3575	Remote signal 3 received (Rem.Sig 3recv)	Remote Signals	OUT	on off	*		*	LED			BO		93	160	1	Yes
3576	Remote signal 4 received (Rem.Sig 4recv)	Remote Signals	OUT	on off	*		*	LED			BO		93	161	1	Yes
3577	Remote signal 5 received (Rem.Sig 5recv)	Remote Signals	OUT	on off	*		*	LED			BO		93	162	1	Yes
3578	Remote signal 6 received (Rem.Sig 6recv)	Remote Signals	OUT	on off	*		*	LED			BO		93	163	1	Yes
3579	Remote signal 7 received (Rem.Sig 7recv)	Remote Signals	OUT	on off	*		*	LED			BO		93	164	1	Yes
3580	Remote signal 8 received (Rem.Sig 8recv)	Remote Signals	OUT	on off	*		*	LED			BO		93	165	1	Yes
3581	Remote signal 9 received (Rem.Sig 9recv)	Remote Signals	OUT	on off	*		*	LED			BO		93	166	1	Yes
3582	Remote signal 10 received (Rem.Sig10recv)	Remote Signals	OUT	on off	*		*	LED			BO		93	167	1	Yes
3583	Remote signal 11 received (Rem.Sig11recv)	Remote Signals	OUT	on off	*		*	LED			BO		93	168	1	Yes
3584	Remote signal 12 received (Rem.Sig12recv)	Remote Signals	OUT	on off	*		*	LED			BO		93	169	1	Yes
3585	Remote signal 13 received (Rem.Sig13recv)	Remote Signals	OUT	on off	*		*	LED			BO		93	170	1	Yes

No.	Description	Function	Type of In-for-matio n	Log Buffers				Configurable in Matrix					IEC 60870-5-103			
				Event Log ON/OFF	Trip (Fault) Log On/Off	Ground Fault Log ON/OFF	Marked in Oscill. Record	LED	Binary Input	Function Key	Relay	Chatter Suppression	Type	Information Number	Data Unit	General Interrogation
3586	Remote signal 14 received (Rem.Sig14recv)	Remote Signals	OUT	on off	*		*	LED			BO		93	171	1	Yes
3587	Remote signal 15 received (Rem.Sig15recv)	Remote Signals	OUT	on off	*		*	LED			BO		93	172	1	Yes
3588	Remote signal 16 received (Rem.Sig16recv)	Remote Signals	OUT	on off	*		*	LED			BO		93	173	1	Yes
3589	Remote signal 17 received (Rem.Sig17recv)	Remote Signals	OUT	on off	*		*	LED			BO		93	174	1	Yes
3590	Remote signal 18 received (Rem.Sig18recv)	Remote Signals	OUT	on off	*		*	LED			BO		93	175	1	Yes
3591	Remote signal 19 received (Rem.Sig19recv)	Remote Signals	OUT	on off	*		*	LED			BO		93	176	1	Yes
3592	Remote signal 20 received (Rem.Sig20recv)	Remote Signals	OUT	on off	*		*	LED			BO		93	177	1	Yes
3593	Remote signal 21 received (Rem.Sig21recv)	Remote Signals	OUT	on off	*		*	LED			BO		93	178	1	Yes
3594	Remote signal 22 received (Rem.Sig22recv)	Remote Signals	OUT	on off	*		*	LED			BO		93	179	1	Yes
3595	Remote signal 23 received (Rem.Sig23recv)	Remote Signals	OUT	on off	*		*	LED			BO		93	180	1	Yes
3596	Remote signal 24 received (Rem.Sig24recv)	Remote Signals	OUT	on off	*		*	LED			BO		93	181	1	Yes
3603	>BLOCK Distance protection (>BLOCK Distance)	Dis. General	SP	*	*		*	LED	BI		BO					
3611	>ENABLE Z1B (with setted Time Delay) (>ENABLE Z1B)	Dis. General	SP	ON OFF	*		*	LED	BI		BO		28	11	1	Yes
3613	>ENABLE Z1B instantanous (w/o T-Delay) (>ENABLE Z1Binst)	Dis. General	SP	ON OFF	*		*	LED	BI		BO		28	13	1	Yes
3617	>BLOCK Z4-Trip (>BLOCK Z4-Trip)	Dis. General	SP	ON OFF	*		*	LED	BI		BO		28	17	1	Yes
3618	>BLOCK Z5-Trip (>BLOCK Z5-Trip)	Dis. General	SP	ON OFF	*		*	LED	BI		BO		28	18	1	Yes
3619	>BLOCK Z4 for ph-e loops (>BLOCK Z4 Ph-E)	Dis. General	SP	ON OFF	*		*	LED	BI		BO		28	19	1	Yes
3620	>BLOCK Z5 for ph-e loops (>BLOCK Z5 Ph-E)	Dis. General	SP	ON OFF	*		*	LED	BI		BO		28	20	1	Yes
3621	>BLOCK Z6-Trip (>BLOCK Z6-Trip)	Dis. General	SP	ON OFF	*		*	LED	BI		BO		28	41	1	Yes
3622	>BLOCK Z6 for ph-e loops (>BLOCK Z6 Ph-E)	Dis. General	SP	ON OFF	*		*	LED	BI		BO		28	42	1	Yes
3651	Distance is switched off (Dist. OFF)	Dis. General	OUT	ON OFF	*		*	LED			BO		28	51	1	Yes
3652	Distance is BLOCKED (Dist. BLOCK)	Dis. General	OUT	ON OFF	ON OFF		*	LED			BO		28	52	1	Yes
3653	Distance is ACTIVE (Dist. ACTIVE)	Dis. General	OUT	*	*		*	LED			BO		28	53	1	Yes
3654	Setting error K0(Z1) or Angle K0(Z1) (Dis.ErrorK0(Z1))	Dis. General	OUT	ON OFF	*		*	LED			BO					
3655	Setting error K0(>Z1) or Angle K0(>Z1) (DisErrorK0(>Z1))	Dis. General	OUT	ON OFF	*		*	LED			BO					
3671	Distance PICKED UP (Dis. PICKUP)	Dis. General	OUT	*	OFF		*	LED			BO		28	71	2	Yes
3672	Distance PICKUP L1 (Dis.Pickup L1)	Dis. General	OUT	*	*		m	LED			BO		28	72	2	Yes
3673	Distance PICKUP L2 (Dis.Pickup L2)	Dis. General	OUT	*	*		m	LED			BO		28	73	2	Yes

No.	Description	Function	Type of In-for-matio n	Log Buffers				Configurable in Matrix					IEC 60870-5-103			
				Event Log ON/OFF	Trip (Fault) Log On/Off	Ground Fault Log ON/OFF	Marked in Oscill. Record	LED	Binary Input	Function Key	Relay	Chatter Suppression	Type	Information Number	Data Unit	General Interrogation
3674	Distance PICKUP L3 (Dis.Pickup L3)	Dis. General	OUT	*	*		m	LED			BO		28	74	2	Yes
3675	Distance PICKUP Earth (Dis.Pickup E)	Dis. General	OUT	*	*		m	LED			BO		28	75	2	Yes
3681	Distance Pickup Phase L1 (only) (Dis.Pickup 1pL1)	Dis. General	OUT	*	ON		*	LED			BO		28	81	2	No
3682	Distance Pickup L1E (Dis.Pickup L1E)	Dis. General	OUT	*	ON		*	LED			BO		28	82	2	No
3683	Distance Pickup Phase L2 (only) (Dis.Pickup 1pL2)	Dis. General	OUT	*	ON		*	LED			BO		28	83	2	No
3684	Distance Pickup L2E (Dis.Pickup L2E)	Dis. General	OUT	*	ON		*	LED			BO		28	84	2	No
3685	Distance Pickup L12 (Dis.Pickup L12)	Dis. General	OUT	*	ON		*	LED			BO		28	85	2	No
3686	Distance Pickup L12E (Dis.Pick-up L12E)	Dis. General	OUT	*	ON		*	LED			BO		28	86	2	No
3687	Distance Pickup Phase L3 (only) (Dis.Pickup 1pL3)	Dis. General	OUT	*	ON		*	LED			BO		28	87	2	No
3688	Distance Pickup L3E (Dis.Pickup L3E)	Dis. General	OUT	*	ON		*	LED			BO		28	88	2	No
3689	Distance Pickup L31 (Dis.Pickup L31)	Dis. General	OUT	*	ON		*	LED			BO		28	89	2	No
3690	Distance Pickup L31E (Dis.Pick-up L31E)	Dis. General	OUT	*	ON		*	LED			BO		28	90	2	No
3691	Distance Pickup L23 (Dis.Pickup L23)	Dis. General	OUT	*	ON		*	LED			BO		28	91	2	No
3692	Distance Pickup L23E (Dis.Pick-up L23E)	Dis. General	OUT	*	ON		*	LED			BO		28	92	2	No
3693	Distance Pickup L123 (Dis.Pick-up L123)	Dis. General	OUT	*	ON		*	LED			BO		28	93	2	No
3694	Distance Pickup123E (Dis.Pickup123E)	Dis. General	OUT	*	ON		*	LED			BO		28	94	2	No
3701	Distance Loop L1E selected forward (Dis.Loop L1-E f)	Dis. General	OUT	*	ON OFF		*	LED			BO					
3702	Distance Loop L2E selected forward (Dis.Loop L2-E f)	Dis. General	OUT	*	ON OFF		*	LED			BO					
3703	Distance Loop L3E selected forward (Dis.Loop L3-E f)	Dis. General	OUT	*	ON OFF		*	LED			BO					
3704	Distance Loop L12 selected forward (Dis.Loop L1-2 f)	Dis. General	OUT	*	ON OFF		*	LED			BO					
3705	Distance Loop L23 selected forward (Dis.Loop L2-3 f)	Dis. General	OUT	*	ON OFF		*	LED			BO					
3706	Distance Loop L31 selected forward (Dis.Loop L3-1 f)	Dis. General	OUT	*	ON OFF		*	LED			BO					
3707	Distance Loop L1E selected reverse (Dis.Loop L1-E r)	Dis. General	OUT	*	ON OFF		*	LED			BO					
3708	Distance Loop L2E selected reverse (Dis.Loop L2-E r)	Dis. General	OUT	*	ON OFF		*	LED			BO					
3709	Distance Loop L3E selected reverse (Dis.Loop L3-E r)	Dis. General	OUT	*	ON OFF		*	LED			BO					
3710	Distance Loop L12 selected reverse (Dis.Loop L1-2 r)	Dis. General	OUT	*	ON OFF		*	LED			BO					
3711	Distance Loop L23 selected reverse (Dis.Loop L2-3 r)	Dis. General	OUT	*	ON OFF		*	LED			BO					
3712	Distance Loop L31 selected reverse (Dis.Loop L3-1 r)	Dis. General	OUT	*	ON OFF		*	LED			BO					

No.	Description	Function	Type of Information	Log Buffers				Configurable in Matrix					IEC 60870-5-103			
				Event Log ON/OFF	Trip (Fault) Log On/Off	Ground Fault Log ON/OFF	Marked in Oscill. Record	LED	Binary Input	Function Key	Relay	Chatter Suppression	Type	Information Number	Data Unit	General Interrogation
3713	Distance Loop L1E selected non-direct. (Dis.Loop L1E<->)	Dis. General	OUT	*	ON OFF		*	LED			BO					
3714	Distance Loop L2E selected non-direct. (Dis.Loop L2E<->)	Dis. General	OUT	*	ON OFF		*	LED			BO					
3715	Distance Loop L3E selected non-direct. (Dis.Loop L3E<->)	Dis. General	OUT	*	ON OFF		*	LED			BO					
3716	Distance Loop L12 selected non-direct. (Dis.Loop L12<->)	Dis. General	OUT	*	ON OFF		*	LED			BO					
3717	Distance Loop L23 selected non-direct. (Dis.Loop L23<->)	Dis. General	OUT	*	ON OFF		*	LED			BO					
3718	Distance Loop L31 selected non-direct. (Dis.Loop L31<->)	Dis. General	OUT	*	ON OFF		*	LED			BO					
3719	Distance Pickup FORWARD (Dis. forward)	Dis. General	OUT	*	*		m	LED			BO		128	74	2	No
3720	Distance Pickup REVERSE (Dis. reverse)	Dis. General	OUT	*	*		m	LED			BO		128	75	2	No
3741	Distance Pickup Z1, Loop L1E (Dis. Z1 L1E)	Dis. General	OUT	*	*		*	LED			BO					
3742	Distance Pickup Z1, Loop L2E (Dis. Z1 L2E)	Dis. General	OUT	*	*		*	LED			BO					
3743	Distance Pickup Z1, Loop L3E (Dis. Z1 L3E)	Dis. General	OUT	*	*		*	LED			BO					
3744	Distance Pickup Z1, Loop L12 (Dis. Z1 L12)	Dis. General	OUT	*	*		*	LED			BO					
3745	Distance Pickup Z1, Loop L23 (Dis. Z1 L23)	Dis. General	OUT	*	*		*	LED			BO					
3746	Distance Pickup Z1, Loop L31 (Dis. Z1 L31)	Dis. General	OUT	*	*		*	LED			BO					
3747	Distance Pickup Z1B, Loop L1E (Dis. Z1B L1E)	Dis. General	OUT	*	*		*	LED			BO					
3748	Distance Pickup Z1B, Loop L2E (Dis. Z1B L2E)	Dis. General	OUT	*	*		*	LED			BO					
3749	Distance Pickup Z1B, Loop L3E (Dis. Z1B L3E)	Dis. General	OUT	*	*		*	LED			BO					
3750	Distance Pickup Z1B, Loop L12 (Dis. Z1B L12)	Dis. General	OUT	*	*		*	LED			BO					
3751	Distance Pickup Z1B, Loop L23 (Dis. Z1B L23)	Dis. General	OUT	*	*		*	LED			BO					
3752	Distance Pickup Z1B, Loop L31 (Dis. Z1B L31)	Dis. General	OUT	*	*		*	LED			BO					
3755	Distance Pickup Z2 (Dis. Pickup Z2)	Dis. General	OUT	*	*		*	LED			BO					
3758	Distance Pickup Z3 (Dis. Pickup Z3)	Dis. General	OUT	*	*		*	LED			BO					
3759	Distance Pickup Z4 (Dis. Pickup Z4)	Dis. General	OUT	*	*		*	LED			BO					
3760	Distance Pickup Z5 (Dis. Pickup Z5)	Dis. General	OUT	*	*		*	LED			BO					
3762	Distance Pickup Z6 (Dis. Pickup Z6)	Dis. General	OUT	*	*		*	LED			BO					
3770	DistanceTime Out T6 (Dis.Time Out T6)	Dis. General	OUT	*	*		*	LED			BO		28	176	2	No
3771	DistanceTime Out T1 (Dis.Time Out T1)	Dis. General	OUT	*	*		*	LED			BO		128	78	2	No
3774	DistanceTime Out T2 (Dis.Time Out T2)	Dis. General	OUT	*	*		*	LED			BO		128	79	2	No

No.	Description	Function	Type of In-for-matio n	Log Buffers				Configurable in Matrix					IEC 60870-5-103			
				Event Log ON/OFF	Trip (Fault) Log On/Off	Ground Fault Log ON/OFF	Marked in Oscill. Record	LED	Binary Input	Function Key	Relay	Chatter Suppression	Type	Information Number	Data Unit	General Interrogation
3777	DistanceTime Out T3 (Dis.Time Out T3)	Dis. General	OUT	*	*		*	LED			BO		128	80	2	No
3778	DistanceTime Out T4 (Dis.Time Out T4)	Dis. General	OUT	*	*		*	LED			BO		128	81	2	No
3779	DistanceTime Out T5 (Dis.Time Out T5)	Dis. General	OUT	*	*		*	LED			BO		128	82	2	No
3780	DistanceTime Out T1B (Dis.Tim-eOut T1B)	Dis. General	OUT	*	*		*	LED			BO		28	180	2	No
3801	Distance protection: General trip (Dis.Gen. Trip)	Dis. General	OUT	*	*		*	LED			BO		28	201	2	No
3802	Distance TRIP command - Only Phase L1 (Dis.Trip 1pL1)	Dis. General	OUT	*	ON		*	LED			BO		28	202	2	No
3803	Distance TRIP command - Only Phase L2 (Dis.Trip 1pL2)	Dis. General	OUT	*	ON		*	LED			BO		28	203	2	No
3804	Distance TRIP command - Only Phase L3 (Dis.Trip 1pL3)	Dis. General	OUT	*	ON		*	LED			BO		28	204	2	No
3805	Distance TRIP command Phases L123 (Dis.Trip 3p)	Dis. General	OUT	*	ON		*	LED			BO		28	205	2	No
3811	Distance TRIP single-phase Z1 (Dis.TripZ1/1p)	Dis. General	OUT	*	*		*	LED			BO		28	211	2	No
3813	Distance TRIP single-phase Z1B (Dis.TripZ1B1p)	Dis. General	OUT	*	*		*	LED			BO		28	213	2	No
3816	Distance TRIP single-phase Z2 (Dis.TripZ2/1p)	Dis. General	OUT	*	*		*	LED			BO		28	216	2	No
3817	Distance TRIP 3phase in Z2 (Dis.TripZ2/3p)	Dis. General	OUT	*	*		*	LED			BO		28	217	2	No
3818	Distance TRIP 3phase in Z3 (Dis.TripZ3/T3)	Dis. General	OUT	*	*		*	LED			BO		28	218	2	No
3821	Distance TRIP 3phase in Z4 (Dis.TRIP 3p. Z4)	Dis. General	OUT	*	*		*	LED			BO		28	209	2	No
3822	Distance TRIP 3phase in Z5 (Dis.TRIP 3p. Z5)	Dis. General	OUT	*	*		*	LED			BO		28	210	2	No
3823	DisTRIP 3phase in Z1 with single-ph Flt. (DisTRIP3p. Z1sf)	Dis. General	OUT	*	*		*	LED			BO		28	224	2	No
3824	DisTRIP 3phase in Z1 with multi-ph Flt. (DisTRIP3p. Z1mf)	Dis. General	OUT	*	*		*	LED			BO		28	225	2	No
3825	DisTRIP 3phase in Z1B with single-ph Flt (DisTRIP3p.Z1Bsf)	Dis. General	OUT	*	*		*	LED			BO		28	244	2	No
3826	DisTRIP 3phase in Z1B with multi-ph Flt. (DisTRIP3p Z1Bmf)	Dis. General	OUT	*	*		*	LED			BO		28	245	2	No
3827	Distance TRIP 3phase in Z6 (Dis.TRIP 3p. Z6)	Dis. General	OUT	*	*		*	LED			BO		28	43	2	No
3850	DisTRIP Z1B with Teleprotection scheme (DisTRIP Z1B Tel)	Dis. General	OUT	*	*		*	LED			BO		28	251	2	No
4001	>Distance Teleprotection ON (>Dis.Telep. ON)	Teleprot. Dist.	SP	*	*		*	LED	BI		BO					
4002	>Distance Teleprotection OFF (>Dis.Telep.OFF)	Teleprot. Dist.	SP	*	*		*	LED	BI		BO					
4003	>Distance Teleprotection BLOCK (>Dis.Telep. Blk)	Teleprot. Dist.	SP	ON OFF	ON OFF		*	LED	BI		BO		29	3	1	Yes
4005	>Dist. teleprotection: Carrier faulty (>Dis.RecFail)	Teleprot. Dist.	SP	on off	*		*	LED	BI		BO					
4006	>Dis.Tele. Carrier RECEPTION Channel 1 (>DisTel Rec.Ch1)	Teleprot. Dist.	SP	on off	on		*	LED	BI		BO		29	6	1	Yes
4007	>Dis.Tele.Carrier RECEPTION Channel 1,L1 (>Dis.T.RecCh1L1)	Teleprot. Dist.	SP	on off	on		*	LED	BI		BO		29	7	1	Yes

No.	Description	Function	Type of In-for-matio n	Log Buffers				Configurable in Matrix					IEC 60870-5-103			
				Event Log ON/OFF	Trip (Fault) Log On/Off	Ground Fault Log ON/OFF	Marked in Oscill. Record	LED	Binary Input	Function Key	Relay	Chatter Suppression	Type	Information Number	Data Unit	General Interrogation
4008	>Dis.Tele.Carrier RECEPTION Channel 1,L2 (>Dis.T.RecCh1L2)	Teleprot. Dist.	SP	on off	on		*	LED	BI		BO		29	8	1	Yes
4009	>Dis.Tele.Carrier RECEPTION Channel 1,L3 (>Dis.T.RecCh1L3)	Teleprot. Dist.	SP	on off	on		*	LED	BI		BO		29	9	1	Yes
4010	>Dis.Tele. Carrier RECEPTION Channel 2 (>Dis.T.Rec.Ch2)	Teleprot. Dist.	SP	on off	on		*	LED	BI		BO		29	10	1	Yes
4030	>Dis.Tele. Unblocking: UNBLOCK Channel 1 (>Dis.T.UB ub 1)	Teleprot. Dist.	SP	on off	on		*	LED	BI		BO		29	30	1	Yes
4031	>Dis.Tele. Unblocking: BLOCK Channel 1 (>Dis.T.UB bl 1)	Teleprot. Dist.	SP	on off	on		*	LED	BI		BO		29	31	1	Yes
4032	>Dis.Tele. Unblocking: UNBLOCK Ch. 1, L1 (>Dis.T.UB ub1L1)	Teleprot. Dist.	SP	on off	on		*	LED	BI		BO		29	32	1	Yes
4033	>Dis.Tele. Unblocking: UNBLOCK Ch. 1, L2 (>Dis.T.UB ub1L2)	Teleprot. Dist.	SP	on off	on		*	LED	BI		BO		29	33	1	Yes
4034	>Dis.Tele. Unblocking: UNBLOCK Ch. 1, L3 (>Dis.T.UB ub1L3)	Teleprot. Dist.	SP	on off	on		*	LED	BI		BO		29	34	1	Yes
4035	>Dis.Tele. Unblocking: UNBLOCK Channel 2 (>Dis.T.UB ub 2)	Teleprot. Dist.	SP	on off	on		*	LED	BI		BO		29	35	1	Yes
4036	>Dis.Tele. Unblocking: BLOCK Channel 2 (>Dis.T.UB bl 2)	Teleprot. Dist.	SP	on off	on		*	LED	BI		BO		29	36	1	Yes
4040	>Dis.Tele. BLOCK Echo Signal (>Dis.T.BlkEcho)	Teleprot. Dist.	SP	on off	on		*	LED	BI		BO		29	40	1	Yes
4050	Dis. Teleprotection ON/OFF via BI (Dis.T.on/off BI)	Teleprot. Dist.	IntSP	ON OFF	*		*	LED			BO					
4051	Teleprotection is switched ON (Telep. ON)	Device	IntSP	*	*		*	LED			BO		128	17	1	Yes
4052	Dis. Teleprotection is switched OFF (Dis.Telep. OFF)	Teleprot. Dist.	OUT	ON OFF	*		*	LED			BO					
4054	Dis. Telep. Carrier signal received (Dis.T.Carr.rec.)	Teleprot. Dist.	OUT	*	*		*	LED			BO		128	77	2	No
4055	Dis. Telep. Carrier CHANNEL FAILURE (Dis.T.Carr.Fail)	Teleprot. Dist.	OUT	*	*		*	LED			BO		128	39	1	Yes
4056	Dis. Telep. Carrier SEND signal (Dis.T.SEND)	Teleprot. Dist.	OUT	on	on		*	LED			BO		128	76	2	No
4057	Dis. Telep. Carrier SEND signal, L1 (Dis.T.SEND L1)	Teleprot. Dist.	OUT	*	*		*	LED			BO					
4058	Dis. Telep. Carrier SEND signal, L2 (Dis.T.SEND L2)	Teleprot. Dist.	OUT	*	*		*	LED			BO					
4059	Dis. Telep. Carrier SEND signal, L3 (Dis.T.SEND L3)	Teleprot. Dist.	OUT	*	*		*	LED			BO					
4060	Dis.Tele.Blocking: Send signal with jump (DisJumpBlocking)	Teleprot. Dist.	OUT	*	*		*	LED			BO		29	60	2	No
4068	Dis. Telep. Transient Blocking (Dis.T.Trans.Blk)	Teleprot. Dist.	OUT	*	ON		*	LED			BO		29	68	2	No
4070	Dis. Tele.Blocking: carrier STOP signal (Dis.T.BL STOP)	Teleprot. Dist.	OUT	*	ON		*	LED			BO		29	70	2	No
4080	Dis. Tele.Unblocking: FAILURE Channel 1 (Dis.T.UB Fail1)	Teleprot. Dist.	OUT	on off	*		*	LED			BO		29	80	1	Yes
4081	Dis. Tele.Unblocking: FAILURE Channel 2 (Dis.T.UB Fail2)	Teleprot. Dist.	OUT	on off	*		*	LED			BO		29	81	1	Yes
4082	DisTel Blocking: carrier STOP signal, L1 (Dis.T.BL STOPL1)	Teleprot. Dist.	OUT	*	*		*	LED			BO					

No.	Description	Function	Type of In-for-matio n	Log Buffers				Configurable in Matrix					IEC 60870-5-103			
				Event Log ON/OFF	Trip (Fault) Log On/Off	Ground Fault Log ON/OFF	Marked in Oscill. Record	LED	Binary Input	Function Key	Relay	Chatter Suppression	Type	Information Number	Data Unit	General Interrogation
4083	DisTel Blocking: carrier STOP signal, L2 (Dis.T.BL STOPL2)	Teleprot. Dist.	OUT	*	*		*	LED			BO					
4084	DisTel Blocking: carrier STOP signal, L3 (Dis.T.BL STOPL3)	Teleprot. Dist.	OUT	*	*		*	LED			BO					
4085	Dis.Tele.Carrier RECEPTION, L1, Device1 (Dis.T.RecL1Dev1)	Teleprot. Dist.	OUT	on off	on		*	LED			BO					
4086	Dis.Tele.Carrier RECEPTION, L2, Device1 (Dis.T.RecL2Dev1)	Teleprot. Dist.	OUT	on off	on		*	LED			BO					
4087	Dis.Tele.Carrier RECEPTION, L3, Device1 (Dis.T.RecL3Dev1)	Teleprot. Dist.	OUT	on off	on		*	LED			BO					
4088	Dis.Tele.Carrier RECEPTION, L1, Device2 (Dis.T.RecL1Dev2)	Teleprot. Dist.	OUT	on off	on		*	LED			BO					
4089	Dis.Tele.Carrier RECEPTION, L2, Device2 (Dis.T.RecL2Dev2)	Teleprot. Dist.	OUT	on off	on		*	LED			BO					
4090	Dis.Tele.Carrier RECEPTION, L3, Device2 (Dis.T.RecL3Dev2)	Teleprot. Dist.	OUT	on off	on		*	LED			BO					
4091	Dis.Tele.Carrier RECEPTION, L1, Device3 (Dis.T.RecL1Dev3)	Teleprot. Dist.	OUT	on off	on		*	LED			BO					
4092	Dis.Tele.Carrier RECEPTION, L2, Device3 (Dis.T.RecL2Dev3)	Teleprot. Dist.	OUT	on off	on		*	LED			BO					
4093	Dis.Tele.Carrier RECEPTION, L3, Device3 (Dis.T.RecL3Dev3)	Teleprot. Dist.	OUT	on off	on		*	LED			BO					
4160	>BLOCK Power Swing detection (>Pow. Swing BLK)	Power Swing	SP	ON OFF	ON OFF		*	LED	BI		BO					
4163	Power Swing unstable (P.Swing unstab.)	Power Swing	OUT	ON	ON		*	LED			BO					
4164	Power Swing detected (Power Swing)	Power Swing	OUT	ON OFF	ON OFF		*	LED			BO		29	164	1	Yes
4166	Power Swing TRIP command (Pow. Swing TRIP)	Power Swing	OUT	ON	ON		*	LED			BO		29	166	1	No
4167	Power Swing detected in L1 (Pow. Swing L1)	Power Swing	OUT	ON OFF	ON OFF		*	LED			BO					
4168	Power Swing detected in L2 (Pow. Swing L2)	Power Swing	OUT	ON OFF	ON OFF		*	LED			BO					
4169	Power Swing detected in L3 (Pow. Swing L3)	Power Swing	OUT	ON OFF	ON OFF		*	LED			BO					
4177	Power Swing unstable 2 (P.Swing unst. 2)	Power Swing	OUT	*	*		*	LED			BO					
4203	>BLOCK Weak Infeed (>BLOCK Weak Inf)	Weak Infeed	SP	*	*		*	LED	BI		BO					
4204	>BLOCK delayed Weak Infeed stage (>BLOCK del. WI)	Weak Infeed	SP	ON OFF	ON OFF		*	LED	BI		BO					
4205	>Reception (channel) for Weak Infeed OK (>WI rec. OK)	Weak Infeed	SP	ON OFF	ON OFF		*	LED	BI		BO					
4206	>Receive signal for Weak Infeed (>WI reception)	Weak Infeed	SP	ON OFF	ON OFF		*	LED	BI		BO					
4221	Weak Infeed is switched OFF (WeakInf. OFF)	Weak Infeed	OUT	ON OFF	*		*	LED			BO		25	21	1	Yes
4222	Weak Infeed is BLOCKED (Weak Inf. BLOCK)	Weak Infeed	OUT	ON OFF	ON OFF		*	LED			BO		25	22	1	Yes
4223	Weak Infeed is ACTIVE (Weak Inf ACTIVE)	Weak Infeed	OUT	*	*		*	LED			BO		25	23	1	Yes
4225	Weak Infeed Zero seq. current detected (3I0 detected)	Weak Infeed	OUT	ON OFF	ON OFF		*	LED			BO					
4226	Weak Infeed Undervoltg. L1 (WI U L1<)	Weak Infeed	OUT	ON OFF	ON OFF		*	LED			BO					

No.	Description	Function	Type of In-for-matio n	Log Buffers				Configurable in Matrix					IEC 60870-5-103			
				Event Log ON/OFF	Trip (Fault) Log On/Off	Ground Fault Log ON/OFF	Marked in Oscill. Record	LED	Binary Input	Function Key	Relay	Chatter Suppression	Type	Information Number	Data Unit	General Interrogation
4227	Weak Infeed Undervoltg. L2 (WI U L2<)	Weak Infeed	OUT	ON OFF	ON OFF		*	LED			BO					
4228	Weak Infeed Undervoltg. L3 (WI U L3<)	Weak Infeed	OUT	ON OFF	ON OFF		*	LED			BO					
4229	WI TRIP with zero sequence current (WI TRIP 3I0)	Weak Infeed	OUT	*	*		*	LED			BO					
4231	Weak Infeed PICKED UP (Weak-Inf. PICKUP)	Weak Infeed	OUT	*	OFF		*	LED			BO		25	31	2	Yes
4232	Weak Infeed PICKUP L1 (W/I Pickup L1)	Weak Infeed	OUT	*	ON		*	LED			BO					
4233	Weak Infeed PICKUP L2 (W/I Pickup L2)	Weak Infeed	OUT	*	ON		*	LED			BO					
4234	Weak Infeed PICKUP L3 (W/I Pickup L3)	Weak Infeed	OUT	*	ON		*	LED			BO					
4241	Weak Infeed General TRIP command (WeakInfeed TRIP)	Weak Infeed	OUT	*	*		*	LED			BO		25	41	2	No
4242	Weak Infeed TRIP command - Only L1 (Weak TRIP 1p.L1)	Weak Infeed	OUT	*	ON		*	LED			BO		25	42	2	No
4243	Weak Infeed TRIP command - Only L2 (Weak TRIP 1p.L2)	Weak Infeed	OUT	*	ON		*	LED			BO		25	43	2	No
4244	Weak Infeed TRIP command - Only L3 (Weak TRIP 1p.L3)	Weak Infeed	OUT	*	ON		*	LED			BO		25	44	2	No
4245	Weak Infeed TRIP command L123 (Weak TRIP L123)	Weak Infeed	OUT	*	ON		*	LED			BO		25	45	2	No
4246	ECHO Send SIGNAL (ECHO SIGNAL)	Weak Infeed	OUT	ON	ON		*	LED			BO		25	46	2	Yes
4247	ECHO Tele.Carrier RECEPTION, Device1 (ECHO Rec. Dev1)	Echo Rec. ov.PI	OUT	ON OFF	ON		*	LED			BO					
4248	ECHO Tele.Carrier RECEPTION, Device2 (ECHO Rec. Dev2)	Echo Rec. ov.PI	OUT	ON OFF	ON		*	LED			BO					
4249	ECHO Tele.Carrier RECEPTION, Device3 (ECHO Rec. Dev3)	Echo Rec. ov.PI	OUT	ON OFF	ON		*	LED			BO					
4253	>BLOCK Instantaneous SOTF Overcurrent (>BLOCK SOTF-O/C)	SOTF Overcurr.	SP	*	*		*	LED	BI		BO					
4271	SOTF-O/C is switched OFF (SOTF-O/C OFF)	SOTF Overcurr.	OUT	ON OFF	*		*	LED			BO		25	71	1	Yes
4272	SOTF-O/C is BLOCKED (SOTF-O/C BLOCK)	SOTF Overcurr.	OUT	ON OFF	ON OFF		*	LED			BO		25	72	1	Yes
4273	SOTF-O/C is ACTIVE (SOTF-O/C ACTIVE)	SOTF Overcurr.	OUT	*	*		*	LED			BO		25	73	1	Yes
4281	SOTF-O/C PICKED UP (SOTF-O/C PICKUP)	SOTF Overcurr.	OUT	*	OFF		*	LED			BO		25	81	2	Yes
4282	SOTF-O/C Pickup L1 (SOF O/CpickupL1)	SOTF Overcurr.	OUT	*	ON		*	LED			BO		25	82	2	Yes
4283	SOTF-O/C Pickup L2 (SOF O/CpickupL2)	SOTF Overcurr.	OUT	*	ON		*	LED			BO		25	83	2	Yes
4284	SOTF-O/C Pickup L3 (SOF O/CpickupL3)	SOTF Overcurr.	OUT	*	ON		*	LED			BO		25	84	2	Yes
4295	SOTF-O/C TRIP command L123 (SOF O/CtripL123)	SOTF Overcurr.	OUT	*	ON		*	LED			BO		25	95	2	No
4403	>BLOCK Direct Transfer Trip function (>BLOCK DTT)	DTT Direct Trip	SP	*	*		*	LED	BI		BO					
4412	>Direct Transfer Trip INPUT Phase L1 (>DTT Trip L1)	DTT Direct Trip	SP	ON OFF	*		*	LED	BI		BO					

No.	Description	Function	Type of In-for-matio n	Log Buffers				Configurable in Matrix					IEC 60870-5-103			
				Event Log ON/OFF	Trip (Fault) Log On/Off	Ground Fault Log ON/OFF	Marked in Oscill. Record	LED	Binary Input	Function Key	Relay	Chatter Suppression	Type	Information Number	Data Unit	General Interrogation
4413	>Direct Transfer Trip INPUT Phase L2 (>DTT Trip L2)	DTT Direct Trip	SP	ON OFF	*		*	LED	BI		BO					
4414	>Direct Transfer Trip INPUT Phase L3 (>DTT Trip L3)	DTT Direct Trip	SP	ON OFF	*		*	LED	BI		BO					
4417	>Direct Transfer Trip INPUT 3ph L123 (>DTT Trip L123)	DTT Direct Trip	SP	ON OFF	*		*	LED	BI		BO					
4421	Direct Transfer Trip is switched OFF (DTT OFF)	DTT Direct Trip	OUT	ON OFF	*		*	LED			BO		51	21	1	Yes
4422	Direct Transfer Trip is BLOCKED (DTT BLOCK)	DTT Direct Trip	OUT	ON OFF	ON OFF		*	LED			BO		51	22	1	Yes
4432	DTT TRIP command - Only L1 (DTT TRIP 1p. L1)	DTT Direct Trip	OUT	*	ON		*	LED			BO		51	32	2	No
4433	DTT TRIP command - Only L2 (DTT TRIP 1p. L2)	DTT Direct Trip	OUT	*	ON		*	LED			BO		51	33	2	No
4434	DTT TRIP command - Only L3 (DTT TRIP 1p. L3)	DTT Direct Trip	OUT	*	ON		*	LED			BO		51	34	2	No
4435	DTT TRIP command L123 (DTT TRIP L123)	DTT Direct Trip	OUT	*	ON		*	LED			BO		51	35	2	No
5203	>BLOCK frequency protection (>BLOCK Freq.)	Frequency Prot.	SP	ON OFF	*		*	LED	BI		BO		70	176	1	Yes
5206	>BLOCK frequency protection stage f1 (>BLOCK f1)	Frequency Prot.	SP	ON OFF	*		*	LED	BI		BO		70	177	1	Yes
5207	>BLOCK frequency protection stage f2 (>BLOCK f2)	Frequency Prot.	SP	ON OFF	*		*	LED	BI		BO		70	178	1	Yes
5208	>BLOCK frequency protection stage f3 (>BLOCK f3)	Frequency Prot.	SP	ON OFF	*		*	LED	BI		BO		70	179	1	Yes
5209	>BLOCK frequency protection stage f4 (>BLOCK f4)	Frequency Prot.	SP	ON OFF	*		*	LED	BI		BO		70	180	1	Yes
5211	Frequency protection is switched OFF (Freq. OFF)	Frequency Prot.	OUT	ON OFF	*		*	LED			BO		70	181	1	Yes
5212	Frequency protection is BLOCKED (Freq. BLOCKED)	Frequency Prot.	OUT	ON OFF	ON OFF		*	LED			BO		70	182	1	Yes
5213	Frequency protection is ACTIVE (Freq. ACTIVE)	Frequency Prot.	OUT	ON OFF	*		*	LED			BO		70	183	1	Yes
5215	Frequency protection undervolt-age Blk (Freq UnderV Blk)	Frequency Prot.	OUT	on off	on off		*	LED			BO		70	238	1	Yes
5232	Frequency protection: f1 picked up (f1 picked up)	Frequency Prot.	OUT	*	ON OFF		*	LED			BO		70	230	2	Yes
5233	Frequency protection: f2 picked up (f2 picked up)	Frequency Prot.	OUT	*	ON OFF		*	LED			BO		70	231	2	Yes
5234	Frequency protection: f3 picked up (f3 picked up)	Frequency Prot.	OUT	*	ON OFF		*	LED			BO		70	232	2	Yes
5235	Frequency protection: f4 picked up (f4 picked up)	Frequency Prot.	OUT	*	ON OFF		*	LED			BO		70	233	2	Yes
5236	Frequency protection: f1 TRIP (f1 TRIP)	Frequency Prot.	OUT	*	ON		*	LED			BO		70	234	2	Yes
5237	Frequency protection: f2 TRIP (f2 TRIP)	Frequency Prot.	OUT	*	ON		*	LED			BO		70	235	2	Yes
5238	Frequency protection: f3 TRIP (f3 TRIP)	Frequency Prot.	OUT	*	ON		*	LED			BO		70	236	2	Yes
5239	Frequency protection: f4 TRIP (f4 TRIP)	Frequency Prot.	OUT	*	ON		*	LED			BO		70	237	2	Yes
5240	Frequency protection: TimeOut Stage f1 (Time Out f1)	Frequency Prot.	OUT	*	*		*	LED			BO					
5241	Frequency protection: TimeOut Stage f2 (Time Out f2)	Frequency Prot.	OUT	*	*		*	LED			BO					

No.	Description	Function	Type of In-for-matio n	Log Buffers				Configurable in Matrix					IEC 60870-5-103			
				Event Log ON/OFF	Trip (Fault) Log On/Off	Ground Fault Log ON/OFF	Marked in Oscill. Record	LED	Binary Input	Function Key	Relay	Chatter Suppression	Type	Information Number	Data Unit	General Interrogation
5242	Frequency protection: TimeOut Stage f3 (Time Out f3)	Frequency Prot.	OUT	*	*		*	LED			BO					
5243	Frequency protection: TimeOut Stage f4 (Time Out f4)	Frequency Prot.	OUT	*	*		*	LED			BO					
6854	>Trip circuit superv. 1: Trip Relay (>TripC1 TripRel)	TripCirc.Superv	SP	ON OFF	*		*	LED	BI		BO					
6855	>Trip circuit superv. 1: Breaker Relay (>TripC1 Bkr.Rel)	TripCirc.Superv	SP	ON OFF	*		*	LED	BI		BO					
6856	>Trip circuit superv. 2: Trip Relay (>TripC2 TripRel)	TripCirc.Superv	SP	ON OFF	*		*	LED	BI		BO					
6857	>Trip circuit superv. 2: Breaker Relay (>TripC2 Bkr.Rel)	TripCirc.Superv	SP	ON OFF	*		*	LED	BI		BO					
6858	>Trip circuit superv. 3: Trip Relay (>TripC3 TripRel)	TripCirc.Superv	SP	ON OFF	*		*	LED	BI		BO					
6859	>Trip circuit superv. 3: Breaker Relay (>TripC3 Bkr.Rel)	TripCirc.Superv	SP	ON OFF	*		*	LED	BI		BO					
6861	Trip circuit supervision OFF (TripC OFF)	TripCirc.Superv	OUT	ON OFF	*		*	LED			BO					
6865	Failure Trip Circuit (FAIL: Trip cir.)	TripCirc.Superv	OUT	ON OFF	*		*	LED			BO		128	36	1	Yes
6866	TripC1 blocked: Binary input is not set (TripC1 ProgFAIL)	TripCirc.Superv	OUT	ON OFF	*		*	LED			BO					
6867	TripC2 blocked: Binary input is not set (TripC2 ProgFAIL)	TripCirc.Superv	OUT	ON OFF	*		*	LED			BO					
6868	TripC3 blocked: Binary input is not set (TripC3 ProgFAIL)	TripCirc.Superv	OUT	ON OFF	*		*	LED			BO					
7104	>BLOCK Backup OverCurrent I>> (>BLOCK O/C I>>)	Back-Up O/C	SP	ON OFF	*		*	LED	BI		BO		64	4	1	Yes
7105	>BLOCK Backup OverCurrent I> (>BLOCK O/C I>)	Back-Up O/C	SP	ON OFF	*		*	LED	BI		BO		64	5	1	Yes
7106	>BLOCK Backup OverCurrent Ip (>BLOCK O/C Ip)	Back-Up O/C	SP	ON OFF	*		*	LED	BI		BO		64	6	1	Yes
7110	>Backup OverCurrent Instanta-neousTrip (>O/C InstTRIP)	Back-Up O/C	SP	ON OFF	ON OFF		*	LED	BI		BO		64	10	1	Yes
7130	>BLOCK I-STUB (>BLOCK I-STUB)	Back-Up O/C	SP	ON OFF	*		*	LED	BI		BO		64	30	1	Yes
7131	>Enable I-STUB-Bus function (>I-STUB ENABLE)	Back-Up O/C	SP	ON OFF	ON OFF		*	LED	BI		BO		64	31	1	Yes
7151	Backup O/C is switched OFF (O/C OFF)	Back-Up O/C	OUT	ON OFF	*		*	LED			BO		64	51	1	Yes
7152	Backup O/C is BLOCKED (O/C BLOCK)	Back-Up O/C	OUT	ON OFF	ON OFF		*	LED			BO		64	52	1	Yes
7153	Backup O/C is ACTIVE (O/C ACTIVE)	Back-Up O/C	OUT	*	*		*	LED			BO		64	53	1	Yes
7161	Backup O/C PICKED UP (O/C PICKUP)	Back-Up O/C	OUT	*	OFF		m	LED			BO		64	61	2	Yes
7162	Backup O/C PICKUP L1 (O/C Pickup L1)	Back-Up O/C	OUT	*	ON		*	LED			BO		64	62	2	Yes
7163	Backup O/C PICKUP L2 (O/C Pickup L2)	Back-Up O/C	OUT	*	ON		*	LED			BO		64	63	2	Yes
7164	Backup O/C PICKUP L3 (O/C Pickup L3)	Back-Up O/C	OUT	*	ON		*	LED			BO		64	64	2	Yes
7165	Backup O/C PICKUP EARTH (O/C Pickup E)	Back-Up O/C	OUT	*	ON		*	LED			BO		64	65	2	Yes
7171	Backup O/C Pickup - Only EARTH (O/C PU only E)	Back-Up O/C	OUT	*	ON		*	LED			BO		64	71	2	No

No.	Description	Function	Type of In-for-matio n	Log Buffers				Configurable in Matrix					IEC 60870-5-103			
				Event Log ON/OFF	Trip (Fault) Log On/Off	Ground Fault Log ON/OFF	Marked in Oscill. Record	LED	Binary Input	Function Key	Relay	Chatter Suppression	Type	Information Number	Data Unit	General Interrogation
7172	Backup O/C Pickup - Only L1 (O/C PU 1p. L1)	Back-Up O/C	OUT	*	ON		*	LED			BO		64	72	2	No
7173	Backup O/C Pickup L1E (O/C Pickup L1E)	Back-Up O/C	OUT	*	ON		*	LED			BO		64	73	2	No
7174	Backup O/C Pickup - Only L2 (O/C PU 1p. L2)	Back-Up O/C	OUT	*	ON		*	LED			BO		64	74	2	No
7175	Backup O/C Pickup L2E (O/C Pickup L2E)	Back-Up O/C	OUT	*	ON		*	LED			BO		64	75	2	No
7176	Backup O/C Pickup L12 (O/C Pickup L12)	Back-Up O/C	OUT	*	ON		*	LED			BO		64	76	2	No
7177	Backup O/C Pickup L12E (O/C Pickup L12E)	Back-Up O/C	OUT	*	ON		*	LED			BO		64	77	2	No
7178	Backup O/C Pickup - Only L3 (O/C PU 1p. L3)	Back-Up O/C	OUT	*	ON		*	LED			BO		64	78	2	No
7179	Backup O/C Pickup L3E (O/C Pickup L3E)	Back-Up O/C	OUT	*	ON		*	LED			BO		64	79	2	No
7180	Backup O/C Pickup L31 (O/C Pickup L31)	Back-Up O/C	OUT	*	ON		*	LED			BO		64	80	2	No
7181	Backup O/C Pickup L31E (O/C Pickup L31E)	Back-Up O/C	OUT	*	ON		*	LED			BO		64	81	2	No
7182	Backup O/C Pickup L23 (O/C Pickup L23)	Back-Up O/C	OUT	*	ON		*	LED			BO		64	82	2	No
7183	Backup O/C Pickup L23E (O/C Pickup L23E)	Back-Up O/C	OUT	*	ON		*	LED			BO		64	83	2	No
7184	Backup O/C Pickup L123 (O/C Pickup L123)	Back-Up O/C	OUT	*	ON		*	LED			BO		64	84	2	No
7185	Backup O/C Pickup L123E (O/C PickupL123E)	Back-Up O/C	OUT	*	ON		*	LED			BO		64	85	2	No
7191	Backup O/C Pickup I>> (O/C PICKUP I>>)	Back-Up O/C	OUT	*	ON		*	LED			BO		64	91	2	Yes
7192	Backup O/C Pickup I> (O/C PICKUP I>)	Back-Up O/C	OUT	*	ON		*	LED			BO		64	92	2	Yes
7193	Backup O/C Pickup Ip (O/C PICKUP Ip)	Back-Up O/C	OUT	*	ON		*	LED			BO		64	93	2	Yes
7201	O/C I-STUB Pickup (I-STUB PICKUP)	Back-Up O/C	OUT	*	ON OFF		*	LED			BO		64	101	2	Yes
7211	Backup O/C General TRIP command (O/C TRIP)	Back-Up O/C	OUT	*	*		*	LED			BO		128	72	2	No
7212	Backup O/C TRIP - Only L1 (O/C TRIP 1p.L1)	Back-Up O/C	OUT	*	ON		*	LED			BO		64	112	2	No
7213	Backup O/C TRIP - Only L2 (O/C TRIP 1p.L2)	Back-Up O/C	OUT	*	ON		*	LED			BO		64	113	2	No
7214	Backup O/C TRIP - Only L3 (O/C TRIP 1p.L3)	Back-Up O/C	OUT	*	ON		*	LED			BO		64	114	2	No
7215	Backup O/C TRIP Phases L123 (O/C TRIP L123)	Back-Up O/C	OUT	*	ON		*	LED			BO		64	115	2	No
7221	Backup O/C TRIP I>> (O/C TRIP I>>)	Back-Up O/C	OUT	*	ON		*	LED			BO		64	121	2	No
7222	Backup O/C TRIP I> (O/C TRIP I>)	Back-Up O/C	OUT	*	ON		*	LED			BO		64	122	2	No
7223	Backup O/C TRIP Ip (O/C TRIP Ip)	Back-Up O/C	OUT	*	ON		*	LED			BO		64	123	2	No
7235	O/C I-STUB TRIP (I-STUB TRIP)	Back-Up O/C	OUT	*	ON		*	LED			BO		64	135	2	No
7325	CB1-TEST TRIP command - Only L1 (CB1-TESTtrip L1)	Testing	OUT	ON OFF	*		*	LED			BO		153	25	1	Yes

No.	Description	Function	Type of Information	Log Buffers				Configurable in Matrix					IEC 60870-5-103			
				Event Log ON/OFF	Trip (Fault) Log On/Off	Ground Fault Log ON/OFF	Marked in Oscill. Record	LED	Binary Input	Function Key	Relay	Chatter Suppression	Type	Information Number	Data Unit	General Interrogation
7326	CB1-TEST TRIP command - Only L2 (CB1-TESTtrip L2)	Testing	OUT	ON OFF	*		*	LED			BO		153	26	1	Yes
7327	CB1-TEST TRIP command - Only L3 (CB1-TESTtrip L3)	Testing	OUT	ON OFF	*		*	LED			BO		153	27	1	Yes
7328	CB1-TEST TRIP command L123 (CB1-TESTtrip123)	Testing	OUT	ON OFF	*		*	LED			BO		153	28	1	Yes
7329	CB1-TEST CLOSE command (CB1-TEST close)	Testing	OUT	ON OFF	*		*	LED			BO		153	29	1	Yes
7345	CB-TEST is in progress (CB-TEST running)	Testing	OUT	ON OFF	*		*	LED			BO		153	45	1	Yes
7346	CB-TEST canceled due to Power Sys. Fault (CB-TSTstop FLT.)	Testing	OUT_ Ev	ON	*											
7347	CB-TEST canceled due to CB already OPEN (CB-TSTstop OPEN)	Testing	OUT_ Ev	ON	*											
7348	CB-TEST canceled due to CB was NOT READY (CB-TSTstop NOTr)	Testing	OUT_ Ev	ON	*											
7349	CB-TEST canceled due to CB stayed CLOSED (CB-TSTstop CLOS)	Testing	OUT_ Ev	ON	*											
7350	CB-TEST was successful (CB-TST .OK.)	Testing	OUT_ Ev	ON	*											
10201	>BLOCK Uph-e>(>) Overvolt. (phase-earth) (>Uph-e>(>) BLK)	Voltage Prot.	SP	*	*		*	LED	BI		BO					
10202	>BLOCK Uph-ph>(>) Overvolt (phase-phase) (>Uph-ph>(>) BLK)	Voltage Prot.	SP	*	*		*	LED	BI		BO					
10203	>BLOCK 3U0>(>) Overvolt. (zero sequence) (>3U0>(>) BLK)	Voltage Prot.	SP	*	*		*	LED	BI		BO					
10204	>BLOCK U1>(>) Overvolt. (positive seq.) (>U1>(>) BLK)	Voltage Prot.	SP	*	*		*	LED	BI		BO					
10205	>BLOCK U2>(>) Overvolt. (negative seq.) (>U2>(>) BLK)	Voltage Prot.	SP	*	*		*	LED	BI		BO					
10206	>BLOCK Uph-e<(<) Undervolt (phase-earth) (>Uph-e<(<) BLK)	Voltage Prot.	SP	*	*		*	LED	BI		BO					
10207	>BLOCK Uphph<(<) Undervolt (phase-phase) (>Uphph<(<) BLK)	Voltage Prot.	SP	*	*		*	LED	BI		BO					
10208	>BLOCK U1<(<) Undervolt (positive seq.) (>U1<(<) BLK)	Voltage Prot.	SP	*	*		*	LED	BI		BO					
10215	Uph-e>(>) Overvolt. is switched OFF (Uph-e>(>) OFF)	Voltage Prot.	OUT	ON OFF	*		*	LED			BO		73	15	1	Yes
10216	Uph-e>(>) Overvolt. is BLOCKED (Uph-e>(>) BLK)	Voltage Prot.	OUT	ON OFF	ON OFF		*	LED			BO		73	16	1	Yes
10217	Uph-ph>(>) Overvolt. is switched OFF (Uph-ph>(>) OFF)	Voltage Prot.	OUT	ON OFF	*		*	LED			BO		73	17	1	Yes
10218	Uph-ph>(>) Overvolt. is BLOCKED (Uph-ph>(>) BLK)	Voltage Prot.	OUT	ON OFF	ON OFF		*	LED			BO		73	18	1	Yes
10219	3U0>(>) Overvolt. is switched OFF (3U0>(>) OFF)	Voltage Prot.	OUT	ON OFF	*		*	LED			BO		73	19	1	Yes
10220	3U0>(>) Overvolt. is BLOCKED (3U0>(>) BLK)	Voltage Prot.	OUT	ON OFF	ON OFF		*	LED			BO		73	20	1	Yes
10221	U1>(>) Overvolt. is switched OFF (U1>(>) OFF)	Voltage Prot.	OUT	ON OFF	*		*	LED			BO		73	21	1	Yes
10222	U1>(>) Overvolt. is BLOCKED (U1>(>) BLK)	Voltage Prot.	OUT	ON OFF	ON OFF		*	LED			BO		73	22	1	Yes

No.	Description	Function	Type of Information	Log Buffers				Configurable in Matrix					IEC 60870-5-103			
				Event Log ON/OFF	Trip (Fault) Log On/Off	Ground Fault Log ON/OFF	Marked in Oscill. Record	LED	Binary Input	Function Key	Relay	Chatter Suppression	Type	Information Number	Data Unit	General Interrogation
10223	U2>(>) Overvolt. is switched OFF (U2>(>) OFF)	Voltage Prot.	OUT	ON OFF	*		*	LED			BO		73	23	1	Yes
10224	U2>(>) Overvolt. is BLOCKED (U2>(>) BLK)	Voltage Prot.	OUT	ON OFF	ON OFF		*	LED			BO		73	24	1	Yes
10225	Uph-e<(<) Undervolt. is switched OFF (Uph-e<(<) OFF)	Voltage Prot.	OUT	ON OFF	*		*	LED			BO		73	25	1	Yes
10226	Uph-e<(<) Undervolt. is BLOCKED (Uph-e<(<) BLK)	Voltage Prot.	OUT	ON OFF	ON OFF		*	LED			BO		73	26	1	Yes
10227	Uph-ph<(<) Undervolt. is switched OFF (Uph-ph<(<) OFF)	Voltage Prot.	OUT	ON OFF	*		*	LED			BO		73	27	1	Yes
10228	Uphph<(<) Undervolt. is BLOCKED (Uph-ph<(<) BLK)	Voltage Prot.	OUT	ON OFF	ON OFF		*	LED			BO		73	28	1	Yes
10229	U1<(<) Undervolt. is switched OFF (U1<(<) OFF)	Voltage Prot.	OUT	ON OFF	*		*	LED			BO		73	29	1	Yes
10230	U1<(<) Undervolt. is BLOCKED (U1<(<) BLK)	Voltage Prot.	OUT	ON OFF	ON OFF		*	LED			BO		73	30	1	Yes
10231	Over-/Under-Voltage protection is ACTIVE (U</> ACTIVE)	Voltage Prot.	OUT	ON OFF	*		*	LED			BO		73	31	1	Yes
10240	Uph-e> Pickup (Uph-e> Pickup)	Voltage Prot.	OUT	*	ON OFF		*	LED			BO		73	40	2	Yes
10241	Uph-e>> Pickup (Uph-e>> Pickup)	Voltage Prot.	OUT	*	ON OFF		*	LED			BO		73	41	2	Yes
10242	Uph-e>(>) Pickup L1 (Uph-e>(>) PU L1)	Voltage Prot.	OUT	*	ON OFF		*	LED			BO		73	42	2	Yes
10243	Uph-e>(>) Pickup L2 (Uph-e>(>) PU L2)	Voltage Prot.	OUT	*	ON OFF		*	LED			BO		73	43	2	Yes
10244	Uph-e>(>) Pickup L3 (Uph-e>(>) PU L3)	Voltage Prot.	OUT	*	ON OFF		*	LED			BO		73	44	2	Yes
10245	Uph-e> TimeOut (Uph-e> Time-Out)	Voltage Prot.	OUT	*	*		*	LED			BO					
10246	Uph-e>> TimeOut (Uph-e>> TimeOut)	Voltage Prot.	OUT	*	*		*	LED			BO					
10247	Uph-e>(>) TRIP command (Uph-e>(>) TRIP)	Voltage Prot.	OUT	*	ON		*	LED			BO		73	47	2	Yes
10248	Uph-e> Pickup L1 (Uph-e> PU L1)	Voltage Prot.	OUT	*	*		*	LED			BO		73	133	2	Yes
10249	Uph-e> Pickup L2 (Uph-e> PU L2)	Voltage Prot.	OUT	*	*		*	LED			BO		73	134	2	Yes
10250	Uph-e> Pickup L3 (Uph-e> PU L3)	Voltage Prot.	OUT	*	*		*	LED			BO		73	135	2	Yes
10251	Uph-e>> Pickup L1 (Uph-e>> PU L1)	Voltage Prot.	OUT	*	*		*	LED			BO		73	136	2	Yes
10252	Uph-e>> Pickup L2 (Uph-e>> PU L2)	Voltage Prot.	OUT	*	*		*	LED			BO		73	137	2	Yes
10253	Uph-e>> Pickup L3 (Uph-e>> PU L3)	Voltage Prot.	OUT	*	*		*	LED			BO		73	138	2	Yes
10255	Uph-ph> Pickup (Uphph> Pickup)	Voltage Prot.	OUT	*	ON OFF		*	LED			BO		73	55	2	Yes
10256	Uph-ph>> Pickup (Uphph>> Pickup)	Voltage Prot.	OUT	*	ON OFF		*	LED			BO		73	56	2	Yes
10257	Uph-ph>(>) Pickup L1-L2 (Uph-ph>(>)PU L12)	Voltage Prot.	OUT	*	ON OFF		*	LED			BO		73	57	2	Yes
10258	Uph-ph>(>) Pickup L2-L3 (Uph-ph>(>)PU L23)	Voltage Prot.	OUT	*	ON OFF		*	LED			BO		73	58	2	Yes
10259	Uph-ph>(>) Pickup L3-L1 (Uph-ph>(>)PU L31)	Voltage Prot.	OUT	*	ON OFF		*	LED			BO		73	59	2	Yes

No.	Description	Function	Type of Information	Log Buffers				Configurable in Matrix					IEC 60870-5-103			
				Event Log ON/OFF	Trip (Fault) Log On/Off	Ground Fault Log ON/OFF	Marked in Oscill. Record	LED	Binary Input	Function Key	Relay	Chatter Suppression	Type	Information Number	Data Unit	General Interrogation
10260	Uph-ph> TimeOut (Uphph> Time-Out)	Voltage Prot.	OUT	*	*		*	LED			BO					
10261	Uph-ph>> TimeOut (Uphph>> TimeOut)	Voltage Prot.	OUT	*	*		*	LED			BO					
10262	Uph-ph>(>) TRIP command (Uphph>(>) TRIP)	Voltage Prot.	OUT	*	ON		*	LED			BO		73	62	2	Yes
10263	Uph-ph> Pickup L1-L2 (Uphph> PU L12)	Voltage Prot.	OUT	*	*		*	LED			BO		73	139	2	Yes
10264	Uph-ph> Pickup L2-L3 (Uphph> PU L23)	Voltage Prot.	OUT	*	*		*	LED			BO		73	140	2	Yes
10265	Uph-ph> Pickup L3-L1 (Uphph> PU L31)	Voltage Prot.	OUT	*	*		*	LED			BO		73	141	2	Yes
10266	Uph-ph>> Pickup L1-L2 (Uph-ph>> PU L12)	Voltage Prot.	OUT	*	*		*	LED			BO		73	142	2	Yes
10267	Uph-ph>> Pickup L2-L3 (Uph-ph>> PU L23)	Voltage Prot.	OUT	*	*		*	LED			BO		73	143	2	Yes
10268	Uph-ph>> Pickup L3-L1 (Uph-ph>> PU L31)	Voltage Prot.	OUT	*	*		*	LED			BO		73	144	2	Yes
10270	3U0> Pickup (3U0> Pickup)	Voltage Prot.	OUT	*	ON OFF		*	LED			BO		73	70	2	Yes
10271	3U0>> Pickup (3U0>> Pickup)	Voltage Prot.	OUT	*	ON OFF		*	LED			BO		73	71	2	Yes
10272	3U0> TimeOut (3U0> TimeOut)	Voltage Prot.	OUT	*	*		*	LED			BO					
10273	3U0>> TimeOut (3U0>> Time-Out)	Voltage Prot.	OUT	*	*		*	LED			BO					
10274	3U0>(>) TRIP command (3U0>(>) TRIP)	Voltage Prot.	OUT	*	ON		*	LED			BO		73	74	2	Yes
10280	U1> Pickup (U1> Pickup)	Voltage Prot.	OUT	*	ON OFF		*	LED			BO		73	80	2	Yes
10281	U1>> Pickup (U1>> Pickup)	Voltage Prot.	OUT	*	ON OFF		*	LED			BO		73	81	2	Yes
10282	U1> TimeOut (U1> TimeOut)	Voltage Prot.	OUT	*	*		*	LED			BO					
10283	U1>> TimeOut (U1>> TimeOut)	Voltage Prot.	OUT	*	*		*	LED			BO					
10284	U1>(>) TRIP command (U1>(>) TRIP)	Voltage Prot.	OUT	*	ON		*	LED			BO		73	84	2	Yes
10290	U2> Pickup (U2> Pickup)	Voltage Prot.	OUT	*	ON OFF		*	LED			BO		73	90	2	Yes
10291	U2>> Pickup (U2>> Pickup)	Voltage Prot.	OUT	*	ON OFF		*	LED			BO		73	91	2	Yes
10292	U2> TimeOut (U2> TimeOut)	Voltage Prot.	OUT	*	*		*	LED			BO					
10293	U2>> TimeOut (U2>> TimeOut)	Voltage Prot.	OUT	*	*		*	LED			BO					
10294	U2>(>) TRIP command (U2>(>) TRIP)	Voltage Prot.	OUT	*	ON		*	LED			BO		73	94	2	Yes
10300	U1< Pickup (U1< Pickup)	Voltage Prot.	OUT	*	ON OFF		*	LED			BO		73	100	2	Yes
10301	U1<< Pickup (U1<< Pickup)	Voltage Prot.	OUT	*	ON OFF		*	LED			BO		73	101	2	Yes
10302	U1< TimeOut (U1< TimeOut)	Voltage Prot.	OUT	*	*		*	LED			BO					
10303	U1<< TimeOut (U1<< TimeOut)	Voltage Prot.	OUT	*	*		*	LED			BO					
10304	U1<(<) TRIP command (U1<(<) TRIP)	Voltage Prot.	OUT	*	ON		*	LED			BO		73	104	2	Yes
10310	Uph-e< Pickup (Uph-e< Pickup)	Voltage Prot.	OUT	*	ON OFF		*	LED			BO		73	110	2	Yes
10311	Uph-e<< Pickup (Uph-e<< Pickup)	Voltage Prot.	OUT	*	ON OFF		*	LED			BO		73	111	2	Yes

No.	Description	Function	Type of Information	Log Buffers				Configurable in Matrix					IEC 60870-5-103			
				Event Log ON/OFF	Trip (Fault) Log On/Off	Ground Fault Log ON/OFF	Marked in Oscill. Record	LED	Binary Input	Function Key	Relay	Chatter Suppression	Type	Information Number	Data Unit	General Interrogation
10312	Uph-e<(<) Pickup L1 (Uph-e<(<) PU L1)	Voltage Prot.	OUT	*	ON OFF		*	LED			BO		73	112	2	Yes
10313	Uph-e<(<) Pickup L2 (Uph-e<(<) PU L2)	Voltage Prot.	OUT	*	ON OFF		*	LED			BO		73	113	2	Yes
10314	Uph-e<(<) Pickup L3 (Uph-e<(<) PU L3)	Voltage Prot.	OUT	*	ON OFF		*	LED			BO		73	114	2	Yes
10315	Uph-e< TimeOut (Uph-e< Time-Out)	Voltage Prot.	OUT	*	*		*	LED			BO					
10316	Uph-e<< TimeOut (Uph-e<< TimeOut)	Voltage Prot.	OUT	*	*		*	LED			BO					
10317	Uph-e<(<) TRIP command (Uph-e<(<) TRIP)	Voltage Prot.	OUT	*	ON		*	LED			BO		73	117	2	Yes
10318	Uph-e< Pickup L1 (Uph-e< PU L1)	Voltage Prot.	OUT	*	*		*	LED			BO		73	145	2	Yes
10319	Uph-e< Pickup L2 (Uph-e< PU L2)	Voltage Prot.	OUT	*	*		*	LED			BO		73	146	2	Yes
10320	Uph-e< Pickup L3 (Uph-e< PU L3)	Voltage Prot.	OUT	*	*		*	LED			BO		73	147	2	Yes
10321	Uph-e<< Pickup L1 (Uph-e<< PU L1)	Voltage Prot.	OUT	*	*		*	LED			BO		73	148	2	Yes
10322	Uph-e<< Pickup L2 (Uph-e<< PU L2)	Voltage Prot.	OUT	*	*		*	LED			BO		73	149	2	Yes
10323	Uph-e<< Pickup L3 (Uph-e<< PU L3)	Voltage Prot.	OUT	*	*		*	LED			BO		73	150	2	Yes
10325	Uph-ph< Pickup (Uph-ph< Pickup)	Voltage Prot.	OUT	*	ON OFF		*	LED			BO		73	125	2	Yes
10326	Uph-ph<< Pickup (Uph-ph<< Pickup)	Voltage Prot.	OUT	*	ON OFF		*	LED			BO		73	126	2	Yes
10327	Uphph<(<) Pickup L1-L2 (Uph-ph<(<)PU L12)	Voltage Prot.	OUT	*	ON OFF		*	LED			BO		73	127	2	Yes
10328	Uphph<(<) Pickup L2-L3 (Uph-ph<(<)PU L23)	Voltage Prot.	OUT	*	ON OFF		*	LED			BO		73	128	2	Yes
10329	Uphph<(<) Pickup L3-L1 (Uph-ph<(<)PU L31)	Voltage Prot.	OUT	*	ON OFF		*	LED			BO		73	129	2	Yes
10330	Uphph< TimeOut (Uphph< Time-Out)	Voltage Prot.	OUT	*	*		*	LED			BO					
10331	Uphph<< TimeOut (Uphph<< TimeOut)	Voltage Prot.	OUT	*	*		*	LED			BO					
10332	Uphph<(<) TRIP command (Uph-ph<(<) TRIP)	Voltage Prot.	OUT	*	ON		*	LED			BO		73	132	2	Yes
10333	Uph-ph< Pickup L1-L2 (Uphph< PU L12)	Voltage Prot.	OUT	*	*		*	LED			BO		73	151	2	Yes
10334	Uph-ph< Pickup L2-L3 (Uphph< PU L23)	Voltage Prot.	OUT	*	*		*	LED			BO		73	152	2	Yes
10335	Uph-ph< Pickup L3-L1 (Uphph< PU L31)	Voltage Prot.	OUT	*	*		*	LED			BO		73	153	2	Yes
10336	Uph-ph<< Pickup L1-L2 (Uph-ph<< PU L12)	Voltage Prot.	OUT	*	*		*	LED			BO		73	154	2	Yes
10337	Uph-ph<< Pickup L2-L3 (Uph-ph<< PU L23)	Voltage Prot.	OUT	*	*		*	LED			BO		73	155	2	Yes
10338	Uph-ph<< Pickup L3-L1 (Uph-ph<< PU L31)	Voltage Prot.	OUT	*	*		*	LED			BO		73	156	2	Yes
14080	E/F 3I0>>> is blocked (E/F 3I0>>>BLOCK)	Earth Fault O/C	OUT	ON OFF	ON OFF		*	LED			BO					
14081	E/F 3I0>> is blocked (E/F 3I0>> BLOCK)	Earth Fault O/C	OUT	ON OFF	ON OFF		*	LED			BO					

No.	Description	Function	Type of In-for-matio n	Log Buffers				Configurable in Matrix					IEC 60870-5-103			
				Event Log ON/OFF	Trip (Fault) Log On/Off	Ground Fault Log ON/OFF	Marked in Oscill. Record	LED	Binary Input	Function Key	Relay	Chatter Suppression	Type	Information Number	Data Unit	General Interrogation
14082	E/F 3I0> is blocked (E/F 3I0> BLOCK)	Earth Fault O/C	OUT	ON OFF	ON OFF		*	LED			BO					
14083	E/F 3I0p is blocked (E/F 3I0p BLOCK)	Earth Fault O/C	OUT	ON OFF	ON OFF		*	LED			BO					
30053	Fault recording is running (Fault rec. run.)	Osc. Fault Rec.	OUT	*	*		*	LED			BO					
31000	Q0 operationcounter= (Q0 OpCnt=)	Control Device	VI													
31001	Q1 operationcounter= (Q1 OpCnt=)	Control Device	VI													
31002	Q2 operationcounter= (Q2 OpCnt=)	Control Device	VI													
31008	Q8 operationcounter= (Q8 OpCnt=)	Control Device	VI													
31009	Q9 operationcounter= (Q9 OpCnt=)	Control Device	VI													

A.9 Group Alarms

No.	Description	Function No.	Description
140	Error Sum Alarm	144	Error 5V
		181	Error A/D-conv.
		192	Error1A/5Awrong
		194	Error neutralCT
160	Alarm Sum Event	162	Failure Σ I
		163	Fail I balance
		165	Fail Σ U Ph-E
		167	Fail U balance
		168	Fail U absent
		169	VT FuseFail>10s
		170	VT FuseFail
		171	Fail Ph. Seq.
		177	Fail Battery
		183	Error Board 1
		184	Error Board 2
		185	Error Board 3
		186	Error Board 4
		187	Error Board 5
		188	Error Board 6
		189	Error Board 7
		190	Error Board 0
		191	Error Offset
		193	Alarm adjustm.
		361	>FAIL:Feeder VT
		3654	Dis.ErrorK0(Z1)
		3655	DisErrorK0(>Z1)
161	Fail I Superv.	162	Failure Σ I
		163	Fail I balance
164	Fail U Superv.	165	Fail Σ U Ph-E
		167	Fail U balance
		168	Fail U absent

A.10 Measured Values

No.	Description	Function	IEC 60870-5-103					Configurable in Matrix		
			Type	Information Number	Compatibility	Data Unit	Position	CFC	Control Display	Default Display
-	Upper setting limit for IL1dmd (IL1dmd>)	Set Points(MV)	-	-	-	-	-	CFC	CD	DD
-	Upper setting limit for IL2dmd (IL2dmd>)	Set Points(MV)	-	-	-	-	-	CFC	CD	DD
-	Upper setting limit for IL3dmd (IL3dmd>)	Set Points(MV)	-	-	-	-	-	CFC	CD	DD
-	Upper setting limit for I1dmd (I1dmd>)	Set Points(MV)	-	-	-	-	-	CFC	CD	DD
-	Upper setting limit for Pdmd (|Pdmd|>)	Set Points(MV)	-	-	-	-	-	CFC	CD	DD
-	Upper setting limit for Qdmd (|Qdmd|>)	Set Points(MV)	-	-	-	-	-	CFC	CD	DD
-	Upper setting limit for Sdmd (Sdmd>)	Set Points(MV)	-	-	-	-	-	CFC	CD	DD
-	Lower setting limit for Power Factor (PF<)	Set Points(MV)	-	-	-	-	-	CFC	CD	DD
601	I L1 (IL1 =)	Measurement	128	148	Yes	9	1	CFC	CD	DD
			134	129	No	9	1			
602	I L2 (IL2 =)	Measurement	128	148	Yes	9	2	CFC	CD	DD
			134	129	No	9	2			
603	I L3 (IL3 =)	Measurement	128	148	Yes	9	3	CFC	CD	DD
			134	129	No	9	3			
610	3I0 (zero sequence) (3I0 =)	Measurement	134	129	No	9	14	CFC	CD	DD
611	3I0sen (sensitive zero sequence) (3I0sen=)	Measurement	134	118	No	9	3	CFC	CD	DD
612	IY (star point of transformer) (IY =)	Measurement	-	-	-	-	-	CFC	CD	DD
613	3I0par (parallel line neutral) (3I0par=)	Measurement	-	-	-	-	-	CFC	CD	DD
619	I1 (positive sequence) (I1 =)	Measurement	-	-	-	-	-	CFC	CD	DD
620	I2 (negative sequence) (I2 =)	Measurement	-	-	-	-	-	CFC	CD	DD
621	U L1-E (UL1E=)	Measurement	128	148	Yes	9	4	CFC	CD	DD
			134	129	No	9	4			
622	U L2-E (UL2E=)	Measurement	128	148	Yes	9	5	CFC	CD	DD
			134	129	No	9	5			
623	U L3-E (UL3E=)	Measurement	128	148	Yes	9	6	CFC	CD	DD
			134	129	No	9	6			
624	U L12 (UL12=)	Measurement	134	129	No	9	10	CFC	CD	DD
625	U L23 (UL23=)	Measurement	134	129	No	9	11	CFC	CD	DD
626	U L31 (UL31=)	Measurement	134	129	No	9	12	CFC	CD	DD
627	Uen (Uen =)	Measurement	134	118	No	9	1	CFC	CD	DD
631	3U0 (zero sequence) (3U0 =)	Measurement	-	-	-	-	-	CFC	CD	DD
632	Measured value Usy2 (Usy2=)	Measurement	-	-	-	-	-	CFC	CD	DD
633	Ux (separate VT) (Ux =)	Measurement	-	-	-	-	-	CFC	CD	DD
634	U1 (positive sequence) (U1 =)	Measurement	-	-	-	-	-	CFC	CD	DD
635	U2 (negative sequence) (U2 =)	Measurement	-	-	-	-	-	CFC	CD	DD
636	Measured value U-diff (Usy1- Usy2) (Udiff =)	Measurement	130	1	No	9	2	CFC	CD	DD
637	Measured value Usy1 (Usy1=)	Measurement	130	1	No	9	3	CFC	CD	DD
638	Measured value Usy2 (Usy2=)	Measurement	130	1	No	9	1	CFC	CD	DD
641	P (active power) (P =)	Measurement	128	148	Yes	9	7	CFC	CD	DD
			134	129	No	9	7			
642	Q (reactive power) (Q =)	Measurement	128	148	Yes	9	8	CFC	CD	DD
			134	129	No	9	8			
643	Power Factor (PF =)	Measurement	134	129	No	9	13	CFC	CD	DD
644	Frequency (Freq=)	Measurement	128	148	Yes	9	9	CFC	CD	DD

No.	Description	Function	IEC 60870-5-103					Configurable in Matrix		
			Type	Information Number	Compatibility	Data Unit	Position	CFC	Control Display	Default Display
			134	129	No	9	9			
645	S (apparent power) (S =)	Measurement	-	-	-	-	-	CFC	CD	DD
646	Frequency fsy2 (F-sy2 =)	Measurement	130	1	No	9	4	CFC	CD	DD
647	Frequency difference (F-diff=)	Measurement	130	1	No	9	5	CFC	CD	DD
648	Angle difference (φ-diff=)	Measurement	130	1	No	9	6	CFC	CD	DD
649	Frequency fsy1 (F-sy1 =)	Measurement	130	1	No	9	7	CFC	CD	DD
679	U1co (positive sequence, compounding) (U1co=)	Measurement	-	-	-	-	-	CFC	CD	DD
684	U0 (zero sequence) (U0 =)	Measurement	134	118	No	9	2	CFC	CD	DD
833	I1 (positive sequence) Demand (I1dmd =)	Demand meter	-	-	-	-	-	CFC	CD	DD
834	Active Power Demand (Pdmd =)	Demand meter	-	-	-	-	-	CFC	CD	DD
835	Reactive Power Demand (Qdmd =)	Demand meter	-	-	-	-	-	CFC	CD	DD
836	Apparent Power Demand (Sdmd =)	Demand meter	-	-	-	-	-	CFC	CD	DD
837	I L1 Demand Minimum (IL1d Min)	Min/Max meter	-	-	-	-	-	CFC	CD	DD
838	I L1 Demand Maximum (IL1d Max)	Min/Max meter	-	-	-	-	-	CFC	CD	DD
839	I L2 Demand Minimum (IL2d Min)	Min/Max meter	-	-	-	-	-	CFC	CD	DD
840	I L2 Demand Maximum (IL2d Max)	Min/Max meter	-	-	-	-	-	CFC	CD	DD
841	I L3 Demand Minimum (IL3d Min)	Min/Max meter	-	-	-	-	-	CFC	CD	DD
842	I L3 Demand Maximum (IL3d Max)	Min/Max meter	-	-	-	-	-	CFC	CD	DD
843	I1 (positive sequence) Demand Minimum (I1dmdMin)	Min/Max meter	-	-	-	-	-	CFC	CD	DD
844	I1 (positive sequence) Demand Maximum (I1dmdMax)	Min/Max meter	-	-	-	-	-	CFC	CD	DD
845	Active Power Demand Minimum (PdMin=)	Min/Max meter	-	-	-	-	-	CFC	CD	DD
846	Active Power Demand Maximum (PdMax=)	Min/Max meter	-	-	-	-	-	CFC	CD	DD
847	Reactive Power Demand Minimum (QdMin=)	Min/Max meter	-	-	-	-	-	CFC	CD	DD
848	Reactive Power Demand Maximum (Qd-Max=)	Min/Max meter	-	-	-	-	-	CFC	CD	DD
849	Apparent Power Demand Minimum (SdMin=)	Min/Max meter	-	-	-	-	-	CFC	CD	DD
850	Apparent Power Demand Maximum (Sd-Max=)	Min/Max meter	-	-	-	-	-	CFC	CD	DD
851	I L1 Minimum (IL1Min=)	Min/Max meter	-	-	-	-	-	CFC	CD	DD
852	I L1 Maximum (IL1Max=)	Min/Max meter	-	-	-	-	-	CFC	CD	DD
853	I L2 Mimimum (IL2Min=)	Min/Max meter	-	-	-	-	-	CFC	CD	DD
854	I L2 Maximum (IL2Max=)	Min/Max meter	-	-	-	-	-	CFC	CD	DD
855	I L3 Minimum (IL3Min=)	Min/Max meter	-	-	-	-	-	CFC	CD	DD
856	I L3 Maximum (IL3Max=)	Min/Max meter	-	-	-	-	-	CFC	CD	DD
857	Positive Sequence Minimum (I1 Min=)	Min/Max meter	-	-	-	-	-	CFC	CD	DD
858	Positive Sequence Maximum (I1 Max=)	Min/Max meter	-	-	-	-	-	CFC	CD	DD
859	U L1E Minimum (UL1EMin=)	Min/Max meter	-	-	-	-	-	CFC	CD	DD
860	U L1E Maximum (UL1EMax=)	Min/Max meter	-	-	-	-	-	CFC	CD	DD
861	U L2E Minimum (UL2EMin=)	Min/Max meter	-	-	-	-	-	CFC	CD	DD
862	U L2E Maximum (UL2EMax=)	Min/Max meter	-	-	-	-	-	CFC	CD	DD
863	U L3E Minimum (UL3EMin=)	Min/Max meter	-	-	-	-	-	CFC	CD	DD
864	U L3E Maximum (UL3EMax=)	Min/Max meter	-	-	-	-	-	CFC	CD	DD
865	U L12 Minimum (UL12Min=)	Min/Max meter	-	-	-	-	-	CFC	CD	DD
867	U L12 Maximum (UL12Max=)	Min/Max meter	-	-	-	-	-	CFC	CD	DD
868	U L23 Minimum (UL23Min=)	Min/Max meter	-	-	-	-	-	CFC	CD	DD
869	U L23 Maximum (UL23Max=)	Min/Max meter	-	-	-	-	-	CFC	CD	DD
870	U L31 Minimum (UL31Min=)	Min/Max meter	-	-	-	-	-	CFC	CD	DD

No.	Description	Function	IEC 60870-5-103					Configurable in Matrix		
			Type	Information Number	Compatibility	Data Unit	Position	CFC	Control Display	Default Display
871	U L31 Maximum (UL31Max=)	Min/Max meter	-	-	-	-	-	CFC	CD	DD
874	U1 (positive sequence) Voltage Minimum (U1 Min =)	Min/Max meter	-	-	-	-	-	CFC	CD	DD
875	U1 (positive sequence) Voltage Maximum (U1 Max =)	Min/Max meter	-	-	-	-	-	CFC	CD	DD
880	Apparent Power Minimum (SMin=)	Min/Max meter	-	-	-	-	-	CFC	CD	DD
881	Apparent Power Maximum (SMax=)	Min/Max meter	-	-	-	-	-	CFC	CD	DD
882	Frequency Minimum (fMin=)	Min/Max meter	-	-	-	-	-	CFC	CD	DD
883	Frequency Maximum (fMax=)	Min/Max meter	-	-	-	-	-	CFC	CD	DD
888	Pulsed Energy Wp (active) (Wp(puls))	Energy	133	55	No	205	-	CFC	CD	DD
889	Pulsed Energy Wq (reactive) (Wq(puls))	Energy	133	56	No	205	-	CFC	CD	DD
924	Wp Forward (Wp+=)	Energy	133	51	No	205	-	CFC	CD	DD
925	Wq Forward (Wq+=)	Energy	133	52	No	205	-	CFC	CD	DD
928	Wp Reverse (Wp-=)	Energy	133	53	No	205	-	CFC	CD	DD
929	Wq Reverse (Wq-=)	Energy	133	54	No	205	-	CFC	CD	DD
963	I L1 demand (IL1dmd=)	Demand meter	-	-	-	-	-	CFC	CD	DD
964	I L2 demand (IL2dmd=)	Demand meter	-	-	-	-	-	CFC	CD	DD
965	I L3 demand (IL3dmd=)	Demand meter	-	-	-	-	-	CFC	CD	DD
966	R L1E (R L1E=)	Measurement	-	-	-	-	-	CFC	CD	DD
967	R L2E (R L2E=)	Measurement	-	-	-	-	-	CFC	CD	DD
970	R L3E (R L3E=)	Measurement	-	-	-	-	-	CFC	CD	DD
971	R L12 (R L12=)	Measurement	-	-	-	-	-	CFC	CD	DD
972	R L23 (R L23=)	Measurement	-	-	-	-	-	CFC	CD	DD
973	R L31 (R L31=)	Measurement	-	-	-	-	-	CFC	CD	DD
974	X L1E (X L1E=)	Measurement	-	-	-	-	-	CFC	CD	DD
975	X L2E (X L2E=)	Measurement	-	-	-	-	-	CFC	CD	DD
976	X L3E (X L3E=)	Measurement	-	-	-	-	-	CFC	CD	DD
977	X L12 (X L12=)	Measurement	-	-	-	-	-	CFC	CD	DD
978	X L23 (X L23=)	Measurement	-	-	-	-	-	CFC	CD	DD
979	X L31 (X L31=)	Measurement	-	-	-	-	-	CFC	CD	DD
1040	Active Power Minimum Forward (Pmin Forw=)	Min/Max meter	-	-	-	-	-	CFC	CD	DD
1041	Active Power Maximum Forward (Pmax Forw=)	Min/Max meter	-	-	-	-	-	CFC	CD	DD
1042	Active Power Minimum Reverse (Pmin Rev =)	Min/Max meter	-	-	-	-	-	CFC	CD	DD
1043	Active Power Maximum Reverse (Pmax Rev =)	Min/Max meter	-	-	-	-	-	CFC	CD	DD
1044	Reactive Power Minimum Forward (Qmin Forw=)	Min/Max meter	-	-	-	-	-	CFC	CD	DD
1045	Reactive Power Maximum Forward (Qmax Forw=)	Min/Max meter	-	-	-	-	-	CFC	CD	DD
1046	Reactive Power Minimum Reverse (Qmin Rev =)	Min/Max meter	-	-	-	-	-	CFC	CD	DD
1047	Reactive Power Maximum Reverse (Qmax Rev =)	Min/Max meter	-	-	-	-	-	CFC	CD	DD
1048	Power Factor Minimum Forward (PFmin-Forw=)	Min/Max meter	-	-	-	-	-	CFC	CD	DD
1049	Power Factor Maximum Forward (PFmax-Forw=)	Min/Max meter	-	-	-	-	-	CFC	CD	DD
1050	Power Factor Minimum Reverse (PFmin Rev=)	Min/Max meter	-	-	-	-	-	CFC	CD	DD

No.	Description	Function	IEC 60870-5-103					Configurable in Matrix		
			Type	Information Number	Compatibility	Data Unit	Position	CFC	Control Display	Default Display
1051	Power Factor Maximum Reverse (PFmax Rev=)	Min/Max meter	-	-	-	-	-	CFC	CD	DD
1052	Active Power Demand Forward (Pdmd Forw=)	Demand meter	-	-	-	-	-	CFC	CD	DD
1053	Active Power Demand Reverse (Pdmd Rev =)	Demand meter	-	-	-	-	-	CFC	CD	DD
1054	Reactive Power Demand Forward (Qdmd Forw=)	Demand meter	-	-	-	-	-	CFC	CD	DD
1055	Reactive Power Demand Reverse (Qdmd Rev =)	Demand meter	-	-	-	-	-	CFC	CD	DD
7751	Prot.Interface 1:Transmission delay (PI1 TD)	Statistics	-	-	-	-	-	CFC	CD	DD
7752	Prot.Interface 2:Transmission delay (PI2 TD)	Statistics	-	-	-	-	-	CFC	CD	DD
7753	Prot.Interface 1: Availability per min. (PI1A/m)	Statistics	-	-	-	-	-	CFC	CD	DD
7754	Prot.Interface 1: Availability per hour (PI1A/h)	Statistics	-	-	-	-	-	CFC	CD	DD
7755	Prot.Interface 2: Availability per min. (PI2A/m)	Statistics	-	-	-	-	-	CFC	CD	DD
7756	Prot.Interface 2: Availability per hour (PI2A/h)	Statistics	-	-	-	-	-	CFC	CD	DD
7761	Relay ID of 1. relay (Relay ID)	Measure relay1	-	-	-	-	-	CFC	CD	DD
7781	Relay ID of 2. relay (Relay ID)	Measure relay2	-	-	-	-	-	CFC	CD	DD
7801	Relay ID of 3. relay (Relay ID)	Measure relay3	-	-	-	-	-	CFC	CD	DD
10102	Min. Zero Sequence Voltage 3U0 (3U0min =)	Min/Max meter	-	-	-	-	-	CFC	CD	DD
10103	Max. Zero Sequence Voltage 3U0 (3U0max =)	Min/Max meter	-	-	-	-	-	CFC	CD	DD
14000	IL1 (primary) (IL1 =)	Measure relay1	-	-	-	-	-	CFC	CD	DD
14001	Angle IL1 (φIL1 =)	Measure relay1	-	-	-	-	-	CFC	CD	DD
14002	IL2 (primary) (IL2 =)	Measure relay1	-	-	-	-	-	CFC	CD	DD
14003	Angle IL2 (φIL2 =)	Measure relay1	-	-	-	-	-	CFC	CD	DD
14004	IL3 (primary) (IL3 =)	Measure relay1	-	-	-	-	-	CFC	CD	DD
14005	Angle IL3 (φIL3 =)	Measure relay1	-	-	-	-	-	CFC	CD	DD
14010	UL1E (primary) (UL1E =)	Measure relay1	-	-	-	-	-	CFC	CD	DD
14011	Angle UL1E (φUL1E =)	Measure relay1	-	-	-	-	-	CFC	CD	DD
14012	UL2E (primary) (UL2E =)	Measure relay1	-	-	-	-	-	CFC	CD	DD
14013	Angle UL2E (φUL2E =)	Measure relay1	-	-	-	-	-	CFC	CD	DD
14014	UL3E (primary) (UL3E =)	Measure relay1	-	-	-	-	-	CFC	CD	DD
14015	Angle UL3E (φUL3E =)	Measure relay1	-	-	-	-	-	CFC	CD	DD
14020	IL1 (primary) (IL1 =)	Measure relay2	-	-	-	-	-	CFC	CD	DD
14021	Angle IL1 (φIL1 =)	Measure relay2	-	-	-	-	-	CFC	CD	DD
14022	IL2 (primary) (IL2 =)	Measure relay2	-	-	-	-	-	CFC	CD	DD
14023	Angle IL2 (φIL2 =)	Measure relay2	-	-	-	-	-	CFC	CD	DD
14024	IL3 (primary) (IL3 =)	Measure relay2	-	-	-	-	-	CFC	CD	DD
14025	Angle IL3 (φIL3 =)	Measure relay2	-	-	-	-	-	CFC	CD	DD
14030	UL1E (primary) (UL1E =)	Measure relay2	-	-	-	-	-	CFC	CD	DD
14031	Angle UL1E (φUL1E =)	Measure relay2	-	-	-	-	-	CFC	CD	DD
14032	UL2E (primary) (UL2E =)	Measure relay2	-	-	-	-	-	CFC	CD	DD
14033	Angle UL2E (φUL2E =)	Measure relay2	-	-	-	-	-	CFC	CD	DD
14034	UL3E (primary) (UL3E =)	Measure relay2	-	-	-	-	-	CFC	CD	DD
14035	Angle UL3E (φUL3E =)	Measure relay2	-	-	-	-	-	CFC	CD	DD
14040	IL1 (primary) (IL1 =)	Measure relay3	-	-	-	-	-	CFC	CD	DD
14041	Angle IL1 (φIL1 =)	Measure relay3	-	-	-	-	-	CFC	CD	DD
14042	IL2 (primary) (IL2 =)	Measure relay3	-	-	-	-	-	CFC	CD	DD

No.	Description	Function	IEC 60870-5-103					Configurable in Matrix		
			Type	Information Number	Compatibility	Data Unit	Position	CFC	Control Display	Default Display
14043	Angle IL2 (φIL2 =)	Measure relay3	-	-	-	-	-	CFC	CD	DD
14044	IL3 (primary) (IL3 =)	Measure relay3	-	-	-	-	-	CFC	CD	DD
14045	Angle IL3 (φIL3 =)	Measure relay3	-	-	-	-	-	CFC	CD	DD
14050	UL1E (primary) (UL1E =)	Measure relay3	-	-	-	-	-	CFC	CD	DD
14051	Angle UL1E (φUL1E =)	Measure relay3	-	-	-	-	-	CFC	CD	DD
14052	UL2E (primary) (UL2E =)	Measure relay3	-	-	-	-	-	CFC	CD	DD
14053	Angle UL2E (φUL2E =)	Measure relay3	-	-	-	-	-	CFC	CD	DD
14054	UL3E (primary) (UL3E =)	Measure relay3	-	-	-	-	-	CFC	CD	DD
14055	Angle UL3E (φUL3E =)	Measure relay3	-	-	-	-	-	CFC	CD	DD

■

Literature

/1/ SIPROTEC 4 System Description; E50417-H1176-C151-B2

/2/ SIPROTEC DIGSI, Start Up; E50417-G1176-C152-A3

/3/ DIGSI CFC, Manual; E50417-H1176-C098-A9

/4/ SIPROTEC SIGRA 4, Manual; E50417-H1100-C070-A4

/5/ Digital Distance Protection: Basics and Applications; Edition: 2. completely revised and extended version (May 14, 2008); Language: German ISBN-10: 389578320X, ISBN-13: 987-3895783203

/6/ Application Examples for SIPROTEC Protection Devices, E50001-K4451-A101-A1

/7/ Case Studies for SIPROTEC Protection Devices and Power Quality; E50001-K4452-A101-A1

Glossary

Battery

The buffer battery ensures that specified data areas, flags, timers and counters are retained retentively.

Bay controllers

Bay controllers are devices with control and monitoring functions without protective functions.

Bit pattern indication

Bit pattern indication is a processing function by means of which items of digital process information applying across several inputs can be detected together in parallel and processed further. The bit pattern length can be specified as 1, 2, 3 or 4 bytes.

BP_xx

→ Bit pattern indication (Bitstring Of x Bit), x designates the length in bits (8, 16, 24 or 32 bits).

C_xx

Command without feedback

CF_xx

Command with feedback

CFC

Continuous Function Chart. CFC is a graphical editor with which a program can be created and configured by using ready-made blocks.

CFC blocks

Blocks are parts of the user program delimited by their function, their structure or their purpose.

Chatter blocking

A rapidly intermittent input (for example, due to a relay contact fault) is switched off after a configurable monitoring time and can thus not generate any further signal changes. The function prevents overloading of the system when a fault arises.

Combination devices

Combination devices are bay devices with protection functions and a control display.

Combination matrix

From DIGSI V4.6 onward, up to 32 compatible SIPROTEC 4 devices can communicate with one another in an Inter Relay Communication combination (IRC combination). Which device exchanges which information is defined with the help of the combination matrix.

Communication branch

A communications branch corresponds to the configuration of 1 to n users that communicate by means of a common bus.

Communication reference CR

The communication reference describes the type and version of a station in communication by PROFIBUS.

Component view

In addition to a topological view, SIMATIC Manager offers you a component view. The component view does not offer any overview of the hierarchy of a project. It does, however, provide an overview of all the SIPROTEC 4 devices within a project.

COMTRADE

Common Format for Transient Data Exchange, format for fault records.

Container

If an object can contain other objects, it is called a container. The object Folder is an example of such a container.

Control display

The display which is displayed on devices with a large (graphic) display after you have pressed the control key is called the control display. It contains the switchgear that can be controlled in the feeder with status display. It is used to perform switching operations. Defining this display is part of the configuration.

Data pane

→ The right-hand area of the project window displays the contents of the area selected in the → navigation window, for example indications, measured values, etc. of the information lists or the function selection for the device configuration.

DCF77

The extremely precise official time is determined in Germany by the "Physikalisch-Technische-Bundesanstalt PTB" in Braunschweig. The atomic clock station of the PTB transmits this time via the long-wave time-signal transmitter in Mainflingen near Frankfurt/Main. The emitted time signal can be received within a radius of approx. 1,500 km from Frankfurt/Main.

Device container

In the Component View, all SIPROTEC 4 devices are assigned to an object of type Device container. This object is a special object of DIGSI Manager. However, since there is no component view in DIGSI Manager, this object only becomes visible in conjunction with STEP 7.

Double command

Double commands are process outputs which indicate 4 process states at 2 outputs: 2 defined (for example ON/OFF) and 2 undefined states (for example intermediate positions)

Double-point indication

Double-point indications are items of process information which indicate 4 process states at 2 inputs: 2 defined (for example ON/OFF) and 2 undefined states (for example intermediate positions).

DP

→ Double-point indication

DP_I

→ Double point indication, intermediate position 00

Drag and drop

Copying, moving and linking function, used at graphics user interfaces. Objects are selected with the mouse, held and moved from one data area to another.

Earth

The conductive earth whose electric potential can be set equal to zero at every point. In the area of earth electrodes the earth can have a potential deviating from zero. The term "Earth reference plane" is often used for this state.

Earth (verb)

This term means that a conductive part is connected via an earthing system to the → earth.

Earthing

Earthing is the total of all means and measures used for earthing.

Electromagnetic compatibility

Electromagnetic compatibility (EMC) is the ability of an electrical apparatus to function fault-free in a specified environment without influencing the environment unduly.

EMC

→ Electromagnetic compatibility

ESD protection

ESD protection is the total of all the means and measures used to protect electrostatic sensitive devices.

ExBPxx

External bit pattern indication via an ETHERNET connection, device-specific → Bit pattern indication

ExC

External command without feedback via an ETHERNET connection, device-specific

ExCF

External command with feedback via an ETHERNET connection, device-specific

ExDP

External double point indication via an ETHERNET connection, device-specific → Double point indication

ExDP_I

External double point indication via an ETHERNET connection, intermediate position 00, device-specific → Double point indication

ExMV

External metered value via an ETHERNET connection, device-specific

ExSI

External single point indication via an ETHERNET connection, device-specific → Single point indication

ExSI_F

External single point indication via an ETHERNET connection, device-specific → Transient information, → Single point indication

Field devices

Generic term for all devices assigned to the field level: Protection devices, combination devices, bay controllers.

Floating

→ Without electrical connection to the → Earth.

FMS communication branch

Within an FMS communication branch, the users communicate on the basis of the PROFIBUS FMS protocol via a PROFIBUS FMS network.

Folder

This object type is used to create the hierarchical structure of a project.

General interrogation (GI)

During the system start-up the state of all the process inputs, of the status and of the fault image is sampled. This information is used to update the system-end process image. The current process state can also be sampled after a data loss by means of a GI.

GOOSE message

GOOSE messages (Generic Object Oriented Substation Event) are data packets which are transferred event-controlled via the Ethernet communication system. They serve for direct information exchange among the relays. This mechanism implements cross-communication between bay units.

GPS

Global Positioning System. Satellites with atomic clocks on board orbit the earth twice a day on different paths in approx. 20,000 km. They transmit signals which also contain the GPS universal time. The GPS receiver determines its own position from the signals received. From its position it can derive the delay time of a satellite signal and thus correct the transmitted GPS universal time.

Hierarchy level

Within a structure with higher-level and lower-level objects a hierarchy level is a container of equivalent objects.

HV field description

The HV project description file contains details of fields which exist in a ModPara-project. The actual field information of each field is stored in a HV field description file. Within the HV project description file, each field is allocated such a HV field description file by a reference to the file name.

HV project description

All the data is exported once the configuration and parameterization of PCUs and sub-modules using ModPara has been completed. This data is split up into several files. One file contains details about the fundamental project structure. This also includes, for example, information detailing which fields exist in this project. This file is called a HV project description file.

ID

Internal double point indication → Double point indication

ID_S

Internal double point indication, intermediate position 00 → Double point indication

IEC

International Electrotechnical Commission, international standardisation body

IEC address

Within an IEC bus a unique IEC address has to be assigned to each SIPROTEC 4 device. A total of 254 IEC addresses are available for each IEC bus.

IEC communication branch

Within an IEC communication branch the users communicate on the basis of the IEC60-870-5-103 protocol via an IEC bus.

IEC61850

International communication standard for communication in substations. The objective of this standard is the interoperability of devices from different manufacturers on the station bus. An Ethernet network is used for data transfer.

Initialization string

An initialization string comprises a range of modem-specific commands. These are transmitted to the modem within the framework of modem initialization. The commands can, for example, force specific settings for the modem.

Inter relay communication

→ IRC combination

IRC combination

Inter Relay Communication, IRC, is used for directly exchanging process information between SIPROTEC 4 devices. You require an object of type IRC combination to configure an inter relay communication. Each user of the combination and all the necessary communication parameters are defined in this object. The type and scope of the information exchanged between the users is also stored in this object.

IRIG-B

Time signal code of the Inter-Range Instrumentation Group

IS

Internal single point indication → Single point indication

IS_F

Internal indication transient → Transient information, → Single point indication

ISO 9001

The ISO 9000 ff range of standards defines measures used to assure the quality of a product from the development stage to the manufacturing stage.

LFO filter

(Low Frequency Oscillation) filter for low-frequency oscillations

Link address

The link address gives the address of a V3/V2 device.

List view

The right window section of the project window displays the names and icons of objects which represent the contents of a container selected in the tree view. Because they are displayed in the form of a list, this area is called the list view.

LV

Limit value

LVU

Limit value, user-defined

Master

Masters may send data to other users and request data from other users. DIGSI operates as a master.

Metered value

Metered values are a processing function with which the total number of discrete similar events (counting pulses) is determined for a period, usually as an integrated value. In power supply companies the electrical work is usually recorded as a metered value (energy purchase/supply, energy transportation).

MLFB

MLFB is the abbreviation for "MaschinenLesbare FabrikateBezeichnung" (machine-readable product designation). This is the equivalent of an order number. The type and version of a SIPROTEC 4 device are coded in the order number.

Modem connection

This object type contains information on both partners of a modem connection, the local modem and the remote modem.

Modem profile

A modem profile consists of the name of the profile, a modem driver and may also comprise several initialization commands and a user address. You can create several modem profiles for one physical modem. To do so you need to link various initialization commands or user addresses to a modem driver and its properties and save them under different names.

Modems

Modem profiles for a modem connection are stored in this object type.

MV

Measured value

MVMV

Metered value which is formed from the measured value

MVT

Measured value with time

MVU

Measured value, user-defined

Navigation pane

The left pane of the project window displays the names and symbols of all containers of a project in the form of a folder tree.

Object

Each element of a project structure is called an object in DIGSI.

Object properties

Each object has properties. These might be general properties that are common to several objects. An object can also have specific properties.

Off-line

In offline mode a connection to a SIPROTEC 4 device is not required. You work with data which are stored in files.

OI_F

Output Indication Transient → Transient information

On-line

When working in online mode, there is a physical connection to a SIPROTEC 4 device. This connection can be implemented as a direct connection, as a modem connection or as a PROFIBUS FMS connection.

OUT

Output indication

Parameter set

The parameter set is the set of all parameters that can be set for a SIPROTEC 4 device.

Phone book

User addresses for a modem connection are saved in this object type.

PMV

Pulse metered value

Process bus

Devices with a process bus interface allow direct communication with SICAM HV modules. The process bus interface is equipped with an Ethernet module.

PROFIBUS

PROcess FIeld BUS, the German process and field bus standard, as specified in the standard EN 50170, Volume 2, PROFIBUS. It defines the functional, electrical, and mechanical properties for a bit-serial field bus.

PROFIBUS address

Within a PROFIBUS network a unique PROFIBUS address has to be assigned to each SIPROTEC 4 device. A total of 254 PROFIBUS addresses are available for each PROFIBUS network.

Project

Content-wise, a project is the image of a real power supply system. Graphically, a project is represented as a number of objects which are integrated in a hierarchical structure. Physically, a project consists of a number of directories and files containing project data.

Protection devices

All devices with a protective function and no control display.

Reorganizing

Frequent addition and deletion of objects results in memory areas that can no longer be used. By reorganizing projects, you can release these memory areas again. However, a cleanup also reassigns the VD addresses. The consequence is that all SIPROTEC 4 devices have to be reinitialized.

RIO file

Relay data Interchange format by Omicron.

RSxxx-interface

Serial interfaces RS232, RS422/485

SCADA Interface

Rear serial interface on the devices for connecting to a control system via IEC or PROFIBUS.

Service port

Rear serial interface on the devices for connecting DIGSI (for example, via modem).

Setting parameters

General term for all adjustments made to the device. Parameterization jobs are executed by means of DIGSI or, in some cases, directly on the device.

SI

→ Single point indication

SI_F

→ Single point indication transient → Transient information, → Single point indication

SICAM WinCC

The SICAM WinCC operator control and monitoring system displays the state of your network graphically, visualizes alarms, interrupts and indications, archives the network data, offers the possibility of intervening manually in the process and manages the system rights of the individual employee.

SICAM PAS (Power Automation System)

Substation control system: The range of possible configurations spans from integrated standalone systems (SICAM PAS and M&C with SICAM PAS CC on one computer) to separate hardware for SICAM PAS and SICAM PAS CC to distributed systems with multiple SICAM Station Units. The software is a modular system with basic and optional packages. SICAM PAS is a purely distributed system: the process interface is implemented by the use of bay units / remote terminal units.

SICAM Station Unit

The SICAM Station Unit with its special hardware (no fan, no rotating parts) and its Windows XP Embedded operating system is the basis for SICAM PAS.

Single command

Single commands are process outputs which indicate 2 process states (for example, ON/OFF) at one output.

Single point indication

Single indications are items of process information which indicate 2 process states (for example, ON/OFF) at one output.

SIPROTEC

The registered trademark SIPROTEC is used for devices implemented on system base V4.

SIPROTEC 4 device

This object type represents a real SIPROTEC 4 device with all the setting values and process data it contains.

SIPROTEC 4 variant

This object type represents a variant of an object of type SIPROTEC 4 device. The device data of this variant may well differ from the device data of the original object. However, all variants derived from the original object have the same VD address as the original object. For this reason they always correspond to the same real SIPROTEC 4 device as the original object. Objects of type SIPROTEC 4 variant have a variety of uses, such as documenting different operating states when entering parameter settings of a SIPROTEC 4 device.

Slave

A slave may only exchange data with a master after being prompted to do so by the master. SIPROTEC 4 devices operate as slaves.

Time stamp

Time stamp is the assignment of the real time to a process event.

Topological view

DIGSI Manager always displays a project in the topological view. This shows the hierarchical structure of a project with all available objects.

Transformer Tap Indication

Transformer tap indication is a processing function on the DI by means of which the tap of the transformer tap changer can be detected together in parallel and processed further.

Transient information

A transient information is a brief transient → single-point indication at which only the coming of the process signal is detected and processed immediately.

Tree view

The left pane of the project window displays the names and symbols of all containers of a project in the form of a folder tree. This area is called the tree view.

TxTap

→ Transformer Tap Indication

User address

A user address comprises the name of the user, the national code, the area code and the user-specific phone number.

Users

From DIGSI V4.6 onward , up to 32 compatible SIPROTEC 4 devices can communicate with one another in an Inter Relay Communication combination. The individual participating devices are called users.

VD

A VD (Virtual Device) includes all communication objects and their properties and states that are used by a communication user through services. A VD can be a physical device, a module of a device or a software module.

VD address

The VD address is assigned automatically by DIGSI Manager. It exists only once in the entire project and thus serves to identify unambiguously a real SIPROTEC 4 device. The VD address assigned by DIGSI Manager must be transferred to the SIPROTEC 4 device in order to allow communication with DIGSI Device Editor.

VFD

A VFD (Virtual Field Device) includes all communication objects and their properties and states that are used by a communication user through services.

VI

VI stands for Value Indication.

Index

A

AC Voltage *473*
Acknowledgement of commands *400*
Adaptive Dead Time *510*
Adaptive dead time (ADT) *258*
ADC Offset *329*
Additional Functions *526*
Analogue Inputs *472*
Angle of inclination of the tripping characteristics *71*
Asymmetrical measuring voltage failure *343*
Auto-reclosure
  Multiple *243*
Automatic reclosing commands *380*
Automatic Reclosing Function *237*
Automatic Reclosure *510*
Automatic reclosure
  Circuit breaker test *357*
  Control *249*
  Initiation *239*
  Operating modes *240*
Automatic reclosure function
  1-pole reclose cycle *242*
  1-pole/ 3-pole reclose cycle *243*
  3-pole reclose cycle *242*
  Circuit breaker auxiliary contacts *241*
  External reclosure device *248*
automatic reclosure function
  Action times *239*
Auxiliary Functions *372*
Auxiliary voltage *409, 473*

B

Back-up Battery *328*
Binary Inputs *474*
Binary Outputs *376*
Blocking *171, 172*
Blocking scheme *146*
Broken Wire *331*
Busbar Tripping *454*

C

Calculation of the impedances *63*
Certifications *483*
Change of Operating Stage *446*
Changing Setting Groups *405*
Check:
  Phase Rotation *455*
  Service interface *435*
  Time Synchronisation Interface *437*
Check: System Connections *439*
Check: System interface *436*
Check: Termination *436*
Checking a Connection *449*
Checking the Communication Topology *448*
Checking:
  Operator interface *435*
Circuit Breaker
  Measuring the Operating Time *463*
  Position Detection *355*
  Test Programs *365*
  Tripping Test *468*
Circuit breaker
  Closing time *43*
  External trip *217*
  Fault *320*
  Position logic *355*
  Test *43*
Circuit breaker auxiliary contacts *313*
Circuit Breaker Failure Protection *311, 518*
Circuit breaker failure protection *323*
  Circuit breaker monitoring *518*
  Initiation conditions *518*
  Pole Discrepancy Supervision *518*
  Stub Fault Protection *518*
  Times *518*
Circuit breaker for voltage transformers *344*
Circuit breaker not operational *325*
Circuit breaker status *52*
Climatic Stress Tests *482*
Closing check operating modes *272*
Closing under asynchronous system conditions *274*
Closing under synchronous system conditions *273*
Command Execution *395*
Command output *400*
Command Path *395*
Command Processing *394*

Command Task *395*
Commissioning Aids
WEB Monitor *372*
Commissioning Tools *31*
Common phase initiation *314*
Communication *25*
Communication Converter *449, 449*
Communication converters *121*
Communication Failure *123*
Communication Interfaces *476*
Communication Media *121*
Comparison Schemes
Distance Protection *138, 139*
Earth Fault Protection *188*
Configuration of auto-reclosure *257*
Configuring the functional scope *34*
Consistency
Parameterisation *451*
Topology *451*
Construction *483*
Control Logic *398*
Control Voltage for Binary Inputs *409*
Controlled zone *92, 106*
Conventional transmission *151*
Conventional transmission (EF) *200*
Counters and memories *380*
Cross polarisation *99*
Cubicle Mounting *433*
Cubicle mounting *529, 530*
Current flow monitoring *312*
Current Inputs *472*
Current Symmetry *330*
Current transformer saturation *52*

D

DC Voltage *473*
Dead Line Check *510*
Dead line check *257*
Dead-line closing *273*
Default Display *376*
Definite time high set current stage $3I_0$*>> 158*
Definite time high set current stage I*>> 220*
Definite time overcurrent stage $3I_0$*> 158*
Definite time stages *173*
Definite time very high set current stage $3I_0$*>>> 157*
Delay times for single-stage/two-stage circuit breaker protection *319*
Dependent zone *85, 103*
Deployment Conditions *483*
Determination of Direction
Long lines *164,*
Determination of direction *81*
Lines with series compensation *164,*
MHO characteristic *96*
Negative phase-sequence system *167*
Series-compensated lines *83*
Transformer star point current *165*
Zero-sequence power (compensated) *168*
Zero-sequence system *165*
Zero-voltage *165*
Device and system logic *572*
Device Logout (Functional Logout) *126*
Dialog Box *445*
Digital transmission *151*
Digital transmission (EF) *200*
Direct connection *121*
Direct Underreach Transfer Trip *137*
Directional Blocking Scheme *196*
Directional characteristic *82*
Directional Check with Load Current *455*
Directional Comparison Pickup *188*
Directional Unblocking Scheme *192*
Display of measured values *382*
Distance Protection *26, 59, 484*
Earth Impedance Ratio *484*
Mutual Impedance Ratio *484*
Distance protection
Earth fault detection *484*
Earth impedance ratio *43*
Phase preference *484*
Times *486*
Double earth faults in effectively earthed systems *72*
Double earth faults in non-earthed systems *67, 72*
Double faults in earthed systems *66*

E

Earth fault
Single-pole tripping *43*
Earth fault detection *59, 70*
Earth Fault Protection *489*
Characteristics *489*
Determination of Direction *493*
High-current Stage *489*
Inrush Restraint *492*
Inverse Current Stage (ANSI) with IEC Characteristic *491*
Inverse Current Stage (IEC) with IEC Characteristic *490*
Inverse Current Stage with Logarithmic Inverse Characteristic *491*
Earth fault protection
Direction determination *178*
Overcurrent stage *490*
Very high set current stage *489*
Zero sequence output stage *492*
Zero sequence voltage stage *492*
Zero-sequence power stage *177*
Earth impedance ratio *48*

Echo Function *150*
Echo function *153*
Echo function (EF) *202*
Electrical Tests *480*
EMC Tests for Interference Emission (Type Test) *481*
EMC Tests for Interference Immunity (Type Tests) *480*
EN100-module
Interface Selection *371*
End fault protection *223, 321, 325*
Energy Metering *393*
Event buffer *377*
Exchanging Interfaces *410*
External Direct and Remote Tripping *505*

F

Fast tripping zone (MHO) *103*
Fast tripping zone (polygon) *85*
Fault direction *81*
Fault Indications *378*
Fault indications *368*
Fault locating
Earth impedance ratio *43*
Fault Locator *517*
Fault Logging *527*
Fault loops *81*
Fault Recording *24, 377, 386, 527*
Feedback monitoring *400*
Fibre-optics *121*
Final Preparation of the Device *470*
Forced 3-pole trip *257*
Frequency Protection *516*
Operating Ranges *516*
Pick-up Values *516*
Times *516*
Tolerances *516*
Frequency protection *300*
Delay time *303*
Frequency measurement *300*
Frequency stages *300*
Operating ranges *301*
Overfrequency protection *300*
Pickup values *303*
Pickup/tripping *301*
Power swings *301*
Underfrequency protection *300*
Function Blocks *522*
Function Control *351*
Functional Logout *123*
Functional scope *34*
Fuse Failure Monitor *332, 343*

G

General *34*
General Interrogation *379*
Grading coordination chart *85, 103*

H

High Current Stages $I_{ph}>>$, $3I_0>>$ *227*
Humidity *482*

I

IEC 61850 GOOSE (Intergerätekommunikation) *528*
Independent Zones *90, 105*
Independent zones *85*
Indications *378, 378*
Information to a Control Centre *377*
Input/output board
C-I/O-2 *420*
Input/output board C-I/O-7 *424*
Input/Output Board(s)
C-I/O-1 and C-I/O-10 *414*
Inrush restraint *165, 182*
Installation: Panel Surface Mounting *434*
Instantaneous High-current Switch-onto-fault
Protection *509*
Instantaneous tripping *213*
before automatic reclosure *224*
Insulation Test *480*
Integrated Display (LCD) *376*
Interlocking *396,*
Interrupted currents *380*
Inverse Current Stage (Earth Fault Protection)
ANSI Characteristic *491*
IEC Characteristic *490*
Logarithmic Inverse Characteristic *491*
Inverse Time Current Stage (Earth Fault Protection)
ANSI Characteristic *175*
Inverse time overcurrent stage *160*
Inverse time overcurrent stage $3I_{0P}$ *159*
Inverse time stage (earth fault protection)
IEC characteristic *174*
Logarithmic inverse characteristic *175*
Inverse Time Stage (Overcurrent Protection)
IEC Characteristic *507*
Inverse Time Stage (Time Overcurrent Protection)
ANSI Characteristic *508*

L

Life Status Contact *409*
Limit value monitoring *392*

Limits for CFC blocks *523*
Limits for user-defined functions *523*
Line data *46*
Line energization recognition *351*
Long-Term Average Values *388*

M

Malfunction Reaction *340*
Mean values *388*
Measured Value Acquisition
  Currents *329*
  Voltages *330*
Measured Value Correction *307*
Measured values *220, 519*
Measured Voltage Failure Monitoring *335*
Measured voltage failure monitoring *344*
Measures for Weak or Zero Infeed *150*
Mechanical Tests *481*
Memory Components *328*
MHO characteristic *96*
  Pickup *102*
Minimum Current *70*
Modem *121*
Monitoring Function *328*
Monitoring Functions *519*

N

Nominal Currents *409*

O

Open Pole Detector *357*
Operating polygons *80*
Operating Time of the Circuit Breaker *463*
Operational Indication Buffer *527*
Operational Indications *378*
Operational measured values *382, 526*
Operator Interface *476*
Operator interface
  Check *435*
Optical Fibres *437*
Ordering Data *534*
Oscillographic Recording for Test *469*
Output Relay Binary Outputs *475*
Output Relays *376*
Overcurrent stage
  *3*I_0> (definite-time overcurrent protection) *228*
  *3*I_{0P}(inverse-time overcurrent protection with ANSI characteristics) *230*
  *3*I_{0P}(inverse-time overcurrent protection with IEC characteristics) *229*
  I> (definite time) *221*
  I_P(inverse time) *221*
  I_P(inverse-time overcurrent protection with ANSI characteristics) *230*
  I_P(inverse-time overcurrent protection with IEC characteristics) *229*
  I_{ph}> (definite-time overcurrent protection) *228*
Overreach Schemes
  via Protection Data Interface *488, 499*
Overreach schemes
  Earth fault protection *499*
Overvoltage Protection
  Positive Sequence SystemU_1 *513*
Overvoltage protection *281*
  Compounding *284*
  Negative sequence system U_2 *285, 293, 514*
  Optional single-phase voltage *514*
  Phase-earth *513*
  Phase-phase *282, 513*
  Phase-to-earth *292*
  Phase-to-phase *292*
  Positive sequence system U_1 *292*
  Positive sequence systemU_1 *283*
  Zero sequence system $3U_0$ *514*
  Zero-sequence system *293*
  Zero-sequence system $3U_0$ *286*

P

Panel flush mounting *529, 530*
Parallel line measured value correction *69, 72*
Parallel line mutual impedance *51*
Permissive Overreach Transfer Trip (POTT)
  Distance Protection *138, 139*
Permissive Underreach Transfer Trip with Zone Acceleration Z1B (PUTT) *134*
Phase Angle Monitoring *337*
Phase angle monitoring *344*
Phase current stabilization *164, 181*
Phase selection *213*
Phase selector *168*
Phase-segregated initiation of the circuit breaker failure protection *316*
Pickup Logic for the Entire Device *359*
Pickup logic/tripping logic *225*
Pickup Value (SOTF) *236*
Polarised MHO characteristic *97*
Polarity Check
  Current Input I_4 *459*
  Voltage InputU_4 *457*
Pole discrepancy supervision *322, 325*
Polygonal characteristic *80*
Power supply *473*

Power Swing Detection *487*
Power System Data 1 *39*
Power System Data 2 *46*
Protection Data Interface
Protection Data Communication *504*
Protection Data Interface and Communication
Topology *502*
Protection Data Topology *120, 124*

R

Rack Mounting *433*
Rated frequency *42*
Reading/Setting/Resetting *380*
Real Time Clock and Buffer Battery *527*
Reclose Cycle *259, 261, 261*
Reclosure
Blocking *240*
Reduced Dead Time *510*
Reduced dead time *257*
Reference Voltages *328*
Remote command *129*
Remote Commands *521*
Remote Indications *521*
Remote measured values *384, 384*
Remote Signals *129*
Remote trip *217*
Reset *389*
Reset of Stored LED / Relays *367*
Resistance tolerance
Arc resistance *87*
Retrievable Indications *379*
Retrieving parameters *393*

S

Sampling Frequency *329*
Series-compensated lines *71*
Service interface
Check *435*
Service/ Modem Interface *476*
Set Points *392*
Setting Groups *45*
Changeover *405*
Settings Group Change Option *45*
Signal Transmission *129*
Single-pole dead time *359*
Single-stage circuit breaker failure protection *324*
Specifications *480*
Spontaneous Fault Messages *367*
Spontaneous Indications *378, 379*
stage I_{ph}>>> *231*
Standard Interlocking *397*
Start Test Measurement Recording *469*
Statistics *527*
Sum monitoring *343*
Supervision with one binary input *349*
Supply Voltage *473*
Switching
Onto a fault *69, 72*
onto a fault *224*
Onto an earth fault *172*
Switching (interlocked/non-interlocked) *396*
Switching onto an earth fault *181*
Switching Statistics *527*
Switching Test of the Configured Operating Equipment *468*
Symmetry monitoring *343*
Synchronism Check *511*
ΔUMeasurement *511*
Synchronism check *268*
Asynchronous power conditions *511*
Operating modes *511*
Synchronous power conditions *511*
Voltages *511*
Synchronism conditions for automatic reclosure *276*
Synchronism conditions for manual closure and control command *276*
System Interface *477*

T

Teleprotection *132*
with earth fault protection *181*
Teleprotection Schemes
Distance Protection *488*
with Earth Fault Protection *499*
Teleprotection schemes *132*
Temperatures *482*
Terminating of Bus-capable Interfaces *410*
Termination *436*
Test in Command Direction *444*
Test Mode *442*
Test Mode: Protection Data Interface *452*
Test Mode: Teleprotection Scheme *452*
Test:
Binary Inputs *446*
Check:Blocking Scheme (Earth-fault Protection) *467*
Circuit Breaker Failure Protection *452*
Current and Voltage Connection *454*
Direction *455*
Directional Blocking Scheme *465*
Indication Direction *444*
LEDs *447*
Output Relays *446*
Permissive (Release) Schemes *464*
Permissive Schemes (Earth-fault Protection) *466*
Polarity Check for the Voltage Measuring Input U_4 *457*

Polarity for the Current Input I_4 *459*
Signal Transmission (Breaker-failure Protection/Stub-fault protection) *467*
Signal Transmission (Earth Fault Protection) *466*
Signal Transmission (int., ext. Remote Tripping) *467*
Switching States of the Binary Inputs/Outputs *445*
Switching the Configured Resources *468*
System Interface *443*
Voltage Transformer Miniature Circuit Breaker *455*
Testing:
Time Synchronisation Interface *442*
User-defined Functions *468*
Three-phase measuring voltage failure *344*
Three-pole coupling *54*
Time Overcurrent Protection *506*
High-set Current Stages *506*
Overcurrent Stages *507*
Stub Fault Protection *508*
Time overcurrent protection
Characteristics *506*
Operating modes *506*
Time Synchronisation Interface *437, 479*
Transfer trip to the remote end circuit breaker *321*
Transient Blocking *149, 198*
Transient blocking *153*
Transient blocking (EF) *202*
Transmission Block *442*
Transmission channels *132*
Transmission of Binary Information *521*
Transmission statistics *380*
Trip Circuit Monitoring *520*
Trip Circuit Supervision *406*
Trip command duration *43*
Trip with delay *214*
Trip-Dependent Indications *367*
Tripping characteristic *96*
Tripping logic *113*
Tripping Logic of the Entire Device *360*
Tripping zones *101*
Trips *380*
Two-stage circuit breaker failure protection *323*
Type of Commands *394*
Type of Contact for Output Relays *410*

U

Unblocking scheme *142*
Underreach Schemes
via Protection Data Interface *488*
Undervoltage Protection
Phase-earth *514*
Positive Sequence System U_1 *515*
Undervoltage protection
Phase-earth *288*
Phase-phase *290, 515*
Phase-to-earth *294*
Phase-to-phase *294*
Positive sequence system U_1 *295*
Positive sequence systemU_1 *290*
User-defined Functions *522*

V

Vibration and Shock Resistance during Stationary Operation *481*
Vibration and Shock Resistance during Transport *482*
Voltage Connection *40*
Voltage Inputs *472*
Voltage Jump *210*
Voltage Phase Sequence *332*
Voltage protection *281*
Voltage Symmetry *331*

W

Watchdog *330*
Weak Infeed *199*
Weak Infeed Tripping
French Specification *501*
Weak-infeed Tripping
classical *500*
Operating Mode *500*
Times *500*
Undervoltage *500*
Web Monitor *31*
WI teleprotection schemes *207*
WI undervoltage *207*

Z

Zero Infeed *199*
Zero-sequence power protection *163*
Zero-sequence voltage stages for single-phase voltage *287*
Zero-sequence voltage time protection *161*
Zero-sequence voltage-conrolled stage with inverse characteristic *176*
Zone logic *108, 111*
Zone pickup *101*